KINGDOM OF THAILAND

MINISTRY OF TRANSPORT AND COMMUNICATIONS

DEPARTMENT OF HIGHWAYS

# STANDARD DRAWINGS

FOR

# HIGHWAY CONSTRUCTION

1994

KINGDOM OF THAILAND

MINISTRY OF TRANSPORT AND COMMUNICATIONS

DEPARTMENT OF HIGHWAYS

# STANDARD DRAWINGS

FOR

## HIGHWAY CONSTRUCTION

JOINTLY PREPARED BY


**CONSULTANT GROUPS**

THAI ENGINEERING CONSULTANTS CO.,LTD.
THAI DCI CO.,LTD.
TESCO LTD.
TEAM CONSULTING ENGINEERS CO.,LTD.
ASIAN ENGINEERING CONSULTANTS CORP.,LTD.
STS ENGINEERING CONSULTANTS CO.,LTD.
NATIONAL ENGINEERING CONSULTANTS CO.,LTD.
CONSULTANTS OF TECHNOLOGY CO.,LTD.
SOUTHEAST ASIA TECHNOLOGY CO.,LTD.

**DEPARTMENT OF HIGHWAYS OFFICERS**

**ROADWORK COMMITTEE**

| | | |
|---|---|---|
| MR. | CHAIYAPORN PUNYASIRI | CHAIRMAN |
| MR. | KIRKKIAT SATAVUTHI | MEMBER |
| MR. | CHUKIAT LUANGCHARU | MEMBER |
| MR. | BUNCHA NIMPONGSAK | MEMBER |
| MR. | PINIJ KEOWMAKOON | MEMBER |

**STRUCTURAL WORK COMMITTEE**

| | | |
|---|---|---|
| MR. | KAMPOL URUYOS | CHAIRMAN |
| MR. | WANCHAI CHANSWANGPHUVANA | MEMBER |
| MR. | SOMBAT JAROENPAT | MEMBER |
| MR. | KITTIPONG MEPANYO | MEMBER |
| MISS | SIRILAK SUPHARAJ | MEMBER |
| MR. | SOMPORN RATTANABURI | MEMBER |


1994

# PART I

## LIST OF STANDARD DRAWINGS FOR ROADWORK

| SHEET NO. | TITLE | DRAWING NO. |
|---|---|---|
| 1 | ABBREVIATIONS AND SYMBOLS | AS – 001 |
| 2 | METHOD OF ATTAINING SUPERELEVATION AND WIDENING OF PAVEMENT FOR CIRCULAR CURVE | TS – 101 |
| 3 | METHOD OF ATTAINING SUPERELEVATION AND WIDENING OF PAVEMENT FOR SPIRAL CURVE | TS – 102 |
| 4 | METHOD OF ATTAINING SUPERELEVATION AND WIDENING OF PAVEMENT FOR COMPOUND AND REVERSE CURVE | TS – 103 |
| 5 | BRIDGE APPROACH TRANSITION | TS – 201 |
| 6 | TYPICAL CROSS – SECTION AT VILLAGE SECTION – I | TS – 301 |
| 7 | TYPICAL CROSS – SECTION AT VILLAGE SECTION – II | TS – 302 |
| 8 | TYPICAL ROADWAY CROSS – SECTION FOR R.O.W. WIDTH 20.00 M. | TS – 303 |
| 9 | TYPICAL ROADWAY CROSS – SECTION FOR R.O.W. WIDTH 30.00 M. | TS – 304 |
| 10 | TYPICAL ROADWAY CROSS – SECTION FOR R.O.W. WIDTH 40.00 M. | TS – 305 |
| 11 | 23 CM. CONCRETE PAVEMENT | TS – 401 |
| 12 | 25 CM. CONCRETE PAVEMENT | TS – 402 |
| 13 | BRIDGE APPROACH SLAB AND POROUS BACKFILL MATERIALS | TS – 403 |
| 14 | CROSS – SECTION FOR DEEP CUT AND HIGH FILL | TS – 501 |
| 15 | PAVEMENT TRANSITION DETAILS | TS – 601 |
| 16 | TYPICAL SURFACE OVERLAY SECTION | TS – 602 |
| 17 | TYPICAL CLIMBING LANE SECTION | TS – 701 |
| 18 | MINOR SIGN & SIGN POST DETAILS | RS – 101 |
| 19 | TRAFFIC CONTROL DEVICES FOR HIGHWAY UNDER CONSTRUCTION – I | RS – 102 |
| 20 | TRAFFIC CONTROL DEVICES FOR HIGHWAY UNDER CONSTRUCTION – II | RS – 103 |
| 21 | TRAFFIC CONTROL DEVICES FOR HIGHWAY UNDER CONSTRUCTION – III | RS – 104 |
| 22 | TRAFFIC CONTROL DEVICES FOR HIGHWAY UNDER CONSTRUCTION – IV | RS – 105 |
| 23 | OVERHEAD SIGN BOARD DETAILS | RS – 106 |
| 24 | STEEL FRAME FOR MOUNTING OVERHEAD SIGN TYPE I SPAN 20.00 M. MAX. | RS – 107 |
| 25 | STEEL FRAME FOR MOUNTING OVERHEAD SIGN TYPE II SPAN 17.00 – 28.00 M. | RS – 108 |
| 26 | STEEL POLE FOR OVERHANGING TRAFFIC SIGN FOR SIGN PLATES NOT MORE THAN 52,800 SQ.CM. | RS – 109 |
| 27 | STEEL POLE FOR OVERHANGING TRAFFIC SIGN FOR SIGN PLATES NOT MORE THAN 108,000 SQ.CM. – I | RS – 110 |
| 28 | STEEL POLE FOR OVERHANGING TRAFFIC SIGN FOR SIGN PLATES NOT MORE THAN 108,000 SQ.CM. – II | RS – 111 |
| 29 | STEEL POLE FOR TWO LEGS OVERHANGING TRAFFIC SIGN FOR SIGN PLATES NOT MORE THAN 2 x 52,800 SQ.CM. – I | RS – 112 |
| 30 | STEEL POLE FOR TWO LEGS OVERHANGING TRAFFIC SIGN FOR SIGN PLATES NOT MORE THAN 2 x 52,800 SQ.CM. – II | RS – 113 |
| 31 | INSTALLATION OF OVERHEAD SIGN AND FRAME TYPE II & TRAFFIC SIGN AND FRAME ON BARRIERS | RS – 114 |
| 32 | STEEL FRAME FOR MOUNTING OVERHEAD SIGNS AT BRIDGE DECK | RS – 115 |
| 33 | PERMANENT TIMBER BARRICADE FOR T – INTERSECTION | RS – 201 |
| 34 | W – BEAM GUARDRAIL | RS – 301 |
| 35 | W – BEAM GUARDRAIL INSTALLATION AND W – BEAM GUARDRAIL APPROACH TYPE I | RS – 302 |
| 36 | W – BEAM GUARDRAIL INSTALLATION AND W – BEAM GUARDRAIL APPROACH TYPE II | RS – 303 |
| 37 | GUIDE POST INSTALLATION | RS – 401 |
| 38 | CONCRETE BARRIER TYPE I | RS – 501 |
| 39 | CONCRETE BARRIER TYPE II | RS – 502 |
| 40 | CONCRETE BARRIER TYPE I FOR DEEP CUT AND HIGH FILL SECTION | RS – 503 |
| 41 | PRE – CAST CONCRETE BARRIER TYPE I | RS – 504 |
| 42 | PRE – CAST CONCRETE BARRIER TYPE II | RS – 505 |
| 43 | CONCRETE BARRIER AT BRIDGE APPROACH | RS – 506 |
| 44 | IMPLEMENT OF CABLE GUARDRAIL | RS – 507 |
| 45 | CONCRETE CURB & CURB AND GUTTER DETAILS | RS – 508 |
| 46 | ROAD STUD | RS – 601 |
| 47 | MARKING DETAILS – I | RS – 602 |
| 48 | MARKING DETAILS – II | RS – 603 |
| 49 | RETAINING WALL – I | RS – 701 |
| 50 | RETAINING WALL – II | RS – 702 |
| 51 | ROAD SIGNS AT MEDIAN OPENING & EXIT AND ENTRANCE | RS – 801 |
| 52 | ROAD SIGNS AT INTERSECTION | RS – 802 |
| 53 | SODDING DETAILS | SP – 101 |
| 54 | CONCRETE SLOPE PROTECTION | SP – 102 |
| 55 | SHOTCRETE BACK SLOPE AND SIDE SLOPE PROTECTION | SP – 103 |
| 56 | SACKED – CONCRETE SLOPE PROTECTION | SP – 104 |
| 57 | RIP RAP PROTECTION FOR EMBANKMENT SLOPE | SP – 105 |
| 58 | SPECIAL PROVISION OF GABIONS | SP – 106 |
| 59 | SPECIFICATION OF GABIONS | SP – 107 |
| 60 | SPECIFICATION FOR GABIONS CONSTRUCTION | SP – 108 |
| 61 | FERRO – CEMENT BACK SLOPE PROTECTION | SP – 201 |
| 62 | CONCRETE SQUARE GRID SLOPE PROTECTION | SP – 202 |
| 63 | GRASSING IN CONCRETE SQUARE GRID AND GRID BEAM | SP – 203 |
| 64 | VETIVER GRASSING FOR SLOPE PROTECTION | SP – 204 |
| 65 | HYDROSEEDING FOR SLOPE PROTECTION | SP – 205 |
| 66 | CONCRETE GRID BEAM BACK SLOPE PROTECTION | SP – 301 |
| 67 | RENO MATTRESS SLOPE PROTECTION | SP – 401 |
| 68 | R.C. PIPE CULVERT | DS – 101 |
| 69 | R.C. PIPE CULVERT INSTALLATION | DS – 102 |
| 70 | HEADWALL FOR R.C. PIPE CULVERT | DS – 103 |
| 71 | R.C. HEADWALL FOR SINGLE R.C.P. CULVERT | DS – 104 |
| 72 | R.C. HEADWALL FOR MULTIPLE R.C.P. CULVERT | DS – 105 |
| 73 | R.C. HEADWALL FOR SKEW R.C.P. CULVERT | DS – 106 |
| 74 | SIDE DITCH LINING & DROP INLET CROSS DRAIN | DS – 201 |
| 75 | CONCRETE DITCH AT HILLSIDE | DS – 202 |
| 76 | R.C. DRAIN OUTLET FOR R.C.P. CULVERT | DS – 203 |
| 77 | CATCH BASIN AT INLET FOR R.C.P. CULVERT | DS – 301 |
| 78 | ASPHALT CURB & DRAIN CHUTE FOR EMBANKMENT PROTECTION | DS – 302 |
| 79 | MANHOLE DETAILS – I | DS – 401 |
| 80 | MANHOLE DETAILS – II | DS – 402 |
| 81 | CATCH BASIN | DS – 403 |
| 82 | MEDIAN DROP INLET TYPE I | DS – 404 |
| 83 | MEDIAN DROP INLET TYPE II | DS – 405 |
| 84 | R.C. DITCH DETAILS – I | DS – 406 |
| 85 | R.C. DITCH DETAILS – II | DS – 407 |
| 86 | DETAIL OF INLET AND MANHOLE TYPE "E" & BOX CULVERT (OPEN TYPE) | DS – 501 |
| 87 | DETAIL OF INLET AND MANHOLE TYPE "F" & BOX CULVERT (CLOSE TYPE) | DS – 502 |
| 88 | DROP INLET & U – DITCH FOR BRIDGE DRAINAGE | DS – 503 |
| 89 | CLEARING AND GRUBBING | MD – 101 |
| 90 | CONNECTION ROAD DETAILS | MD – 201 |
| 91 | SIDE ROAD & PRIVATE DRIVE DETAILS | MD – 202 |
| 92 | BUS STOP LAYOUT | MD – 301 |
| 93 | BUS STOP SHELTER TYPE A | MD – 302 |
| 94 | BUS STOP SHELTER TYPE B | MD – 303 |
| 95 | BUS STOP SHELTER TYPE C – I | MD – 304 |
| 96 | BUS STOP SHELTER TYPE C – II | MD – 305 |
| 97 | BUS STOP SHELTER TYPE D – I | MD – 306 |
| 98 | BUS STOP SHELTER TYPE D – II | MD – 307 |
| 99 | BUS STOP SHELTER TYPE E – I | MD – 308 |
| 100 | BUS STOP SHELTER TYPE E – II | MD – 309 |
| 101 | BUS STOP SHELTER TYPE F – I | MD – 310 |
| 102 | BUS STOP SHELTER TYPE F – II | MD – 311 |
| 103 | RIGHT – OF – WAY MONUMENT & BENCH MARK | MD – 401 |
| 104 | KILOMETER STONE | MD – 402 |
| 105 | PLANTING SPACE ON SIDEWALK | MD – 501 |
| 106 | PLANTING AND GRASSING IN MEDIANS | MD – 502 |
| 107 | MISCELLANEOUS LIGHTING DETAILS | MD – 601 |
| 108 | FENCING DETAILS | MD – 701 |
| 109 | CONCRETE PAVING BLOCK | MD – 801 |
| 110 | CONCRETE PAVEMENT REPAIRING | MD – 802 |
| 111 | METHOD OF TRANSPLANTING TREE | MD – 901 |
| 112 | MEDIAN OPENING | MD – 902 |
| 113 | SPECIAL U – TURN DETAILS | MD – 903 |

# ABBREVIATIONS

| | |
|---|---|
| A | AREA |
| AASHTO | AMERICAN ASSOCIATION OF STATE HIGHWAY AND TRANSPORTATION OFFICIALS |
| A.C. | ASPHALTIC CONCRETE |
| ADT. | AVERAGE DAILY TRAFFIC |
| AGG. | AGGREGATE |
| AH. | AHEAD |
| AISC. | AMERICAN INSTITUTE CONSTRUCTION OF STEEL |
| ALT. | ALTERNATIVE |
| APPROX. | APPROXIMATE |
| ASTM. | AMERICAN SOCIETY FOR TESTING AND MATERIALS |
| AVG. | AVERAGE |
| BIT. | BITUMINOUS |
| BK. | BACK |
| BM. | BENCH MARK |
| BOTT. | BOTTOM |
| BRDG. | BRIDGE |
| BRG. | BEARING |
| BT. | BACK TANGENT |
| C.B.R. | CALIFORNIA BEARING RATIO |
| C/C (OR C TO C) | CENTER TO CENTER |
| CL. | CLEARANCE |
| CM. | CENTIMETER |
| $CM.^2$ | SQUARE CENTIMETER |
| C.M.P. | CORRUGATED METAL PIPE |
| COL. | COLUMN |
| CONC. | CONCRETE |
| CONSTR. | CONSTRUCTION |
| C.P. | CONCRETE PIPE |
| C.S. | CIRCLE - SPIRAL |
| C/W | CARRIAGEWAY |
| CU.M. | CUBIC METER |
| D. | DEGREE OF CURVE |
| DB. | DEFORMED BAR |
| D.B.S.T. | DOUBLE BITUMINOUS SURFACE TREATMENT |
| DEG. | DEGREE |
| DIA. | DIAMETER |
| D.O.H. | DEPARTMENT OF HIGHWAYS |
| DWG. | DRAWING |
| E | EXTERNAL DISTANCE OF SIMPLE CURVE OR EAST |
| EA. | EACH |
| EL. (OR ELEV.) | ELEVATION |
| ENGR. | ENGINEER |
| E.O.P. | EDGE OF PAVEMENT |
| EQ. (OR = ) | EQUATION OR EQUAL |
| EQUIV. | EQUIVALENT |
| EXIST. | EXISTING |
| EXP. | EXPANSION |
| E/B | EAST BOUND |
| FT. | FORWARD TANGENT |
| FTG. | FOOTING |
| GM. | GRAM |
| GL. | GROUND LEVEL |
| H. & RN. | HUB AND RED NAIL |
| HDWL. | HEADWALL |
| HOR. | HORIZONTAL |
| HPS. | HIGH PRESSURE SODIUM LAMP |
| H.W.L. | HIGH WATER LEVEL |
| WY. | HIGHWAY |
| I.D. | INSIDE DIAMETER |
| IN. | INCH |
| INV. | INVERT |
| JT. | JOINT |
| KG. | KILOGRAM |
| KM. | KILOMETER |
| KPH. | KILOMETER PER HOUR |
| KSC. | KILOGRAM PER SQUARE CENTIMETER |
| L. | LENGTH OF HORIZONTAL CURVE OR LENGTH |
| LEV. | LEVEL |
| LG. | LIGHT GAGE STEEL |
| L.M. | LINEAR METER |
| LPS. | LOW PRESSURE SODIUM LAMP |
| Ls. | SUPERELEVATION TRANSITION LENGTH |
| L.S. | LUMP SUM |
| LT. | LEFT |
| L.V.C. | LENGTH OF VERTICAL CURVE |
| L.W.L. | LOW WATER LEVEL |
| M. | METER |
| $M.^2$ | SQUARE METER |
| $M.^3$ | CUBIC METER |
| MAG. AZ. | MAGNETIC AZIMUTH |
| MAX. | MAXIMUM |
| M.E.A. | METROPOLITAN - ELECTRICITY AUTHORITY |
| M.H. | MANHOLE |
| MIN. | MINIMUM |
| MISC. | MISCELLANEOUS |
| MM. | MILLIMETER |
| $MM.^2$ | SQUARE MILLIMETER |
| M.O. | MIDDLE ORDINATE |
| MONT. | MONUMENT |
| M.S.L. | MEAN SEA LEVEL |
| N. | NORTH |
| N/B | NORTH BOUND |
| NC. | NORMAL CROWN |
| NO. | NUMBER |
| O.D. | OUTSIDE DIAMETER |
| P.B.M. | PERMAMENT BENCH MARK |
| P.C. | POINT OF CURVE OR PRESTRESSED CONCRETE |
| P.C.C. | POINT OF COMPOUND CURVE |
| P.E.A. | PROVINCIAL - ELECTRICITY AUTHORITY |
| P.G. | PROFILE GRADE |
| P.G. LINE | PROFILE GRADE LINE |
| P.I. | POINT OF HORIZONTAL INTERSECTION |
| PL. | PLATE |
| P.O.C. | POINT ON CURVE |
| P.O.S.T. | POINT ON SUBTANGENT |
| P.O.T. | POINT ON TANGENT |
| P.R.C. | POINT OF REVERSE CURVE |
| PROJ. | PROJECT |
| P.T. | POINT OF TANGENT |
| P.V.C. | POINT OF VERTICAL CURVE |
| P.V.I. | POINT OF VERTICAL INTERSECTION |
| P.V.R.C. | POINT OF VERTICAL REVERSE CURVE |
| P.V.T. | POINT OF VERTICAL TANGENT |
| R. | RADIUS |
| RB. | ROUND BAR |
| R.C. | REINFORCED CONCRETE |
| RC. | REMOVED ADVERSE CROWN |
| R.C.B. | REINFORCED CONCRETE BOX CULVERT |
| R.C.P. | REINFORCED CONCRETE PIPE CULVERT |
| RD. | ROAD |
| R.E. | RESIDENT ENGINEER |
| REF. | REFERENCE |
| REINF. | REINFORCEMENT |
| REQ'D | REQUIRED |
| R.I.D. | ROYAL IRRIGATION DEPARTMENT |
| R.P. | REFERENCE POINT |
| RT. | RIGHT |
| R/W (OR R.O.W.) | RIGHT - OF - WAY |
| S.B.S.T. | SINGLE BITUMINOUS SURFACE TREATMENT |
| S.C. | SPIRAL - CIRCLE |
| SE. | SUPERELEVATION |
| SEC. (OR Sec.) | SECANT |
| SECT. | SECTION |
| SP. | SPAN |
| SPG. | SPACING |
| S.R. | SIDE ROAD |
| S.R.T. | STATE RAILWAYS OF THAILAND |
| S.T. | SPIRAL - TANGENT |
| STA. | STATION |
| STD. | STANDARD |
| STR. | STRAIGHT |
| SYMM. | SYMMETRY OR SYMMETRICAL |
| S/B | SOUTH BOUND |
| T. | TANGENT LENGTH , TON |
| THK. | THICKNESS |
| TIS. | THAI INDUSTRIAL STANDARD |
| T.S. | TANGENT - SPIRAL |
| TYP. | TYPICAL |
| VOL. | VOLUME |
| V.C. | LENGTH OF VERTICAL CURVE |
| V. | VELOCITY |
| W. | WIDENING |
| W/ | WITH |
| W/B | WEST BOUND |
| W/O | WITHOUT |
| WT. | WEIGHT |
| X SECT. | CROSS SECTION |
| ℄ | CENTERLINE |
| ℙ | PROPERTY LINE |
| $ | SPUR LINE OR SURVEY LINE |
| % | PERCENT |
| & | AND |
| @ | SPACING |
| " | INCH |
| Ø | DIAMETER |
| △ | DEFLECTION ANGLE |

# SYMBOLS

| | |
|---|---|
| CONST. ℄ | CENTER LINE |
| SURVEY ℄ | TRANSIT LINE |
| EXIST. R/W | EXISTING R/W |
| PROPOSED R/W | PROPOSED R/W |
| ℙ | PROPERTY LINE |
| | EDGE OF NEW PAVEMENT |
| | EDGE OF EXISTING PAVEMENT |
| | EXISTING SHOULDER LINE |
| | NEW SHOULDER LINE |
| | EXISTING CURB |
| | NEW CURB |
| | GROUND PROFILE |
| | EXISTING ROAD PROFILE |
| | BACKFILLING EXISTING CHANNELS |
| | EXISTING INLETS |
| | EXISTING PIPE |
| | EXISTING DITCH |
| | PARALLEL DITCH |
| | PIPES |
| | INLET |
| W | WATER & WATER VALVE |
| T | TELEPHONE & MANHOLE |
| E | ELECTRICITY |
| PT PT | POWER TRANSMISSION LINE WITH STEEL TOWER |
| | WOODEN ELECTRIC POLE |
| | CONCRETE ELECTRIC POLE |
| | INDIVIDUAL TREE |
| | HEDGE |
| | BUS STOP SHELTER |
| | TELEPHONE JUNCTION |
| | PUBLIC TELEPHONE BOX |
| | MAIL BOX |
| | TRAFFIC SIGNAL |
| | FIRE HYDRANT |
| | EXISTING PIPE CULVERT (WITH OR WITHOUT HEADWALL) |
| | NEW PIPE CULVERT (WITH OR WITHOUT HEADWALL) |
| | EXISTING BOX CULVERT |
| | NEW BOX CULVERT |
| | EXISTING HIGHWAY GUARDRAIL |
| | NEW HIGHWAY GUARDRAIL |
| | RAIL ROAD CROSSING SIGN |
| | RAIL ROAD CROSSING SIGNAL LIGHT |
| | RAIL ROAD CROSSING GATE |
| | GASOLINE STATION |
| 350 | INDEX CONTOUR |
| | INTERMEDIATE CONTOUR |
| | WOODEN OR BARBED WIRE FENCE |
| | BRIDGE, ROAD OVER STREAM |
| | RAIL ROAD SINGLE TRUCK |
| | KHLONG OR RIVER |
| | DITCH, WATERWAY |
| | FLOW DIRECTION |
| | SWAMP AREA |
| | BILLBOARD, SINGLE FACE |
| | BILLBOARD, DOUBLE FACE |
| | POWER POST OR TELEPHONE POLE |
| | TRAFFIC SIGN |
| | GUIDE POST |
| | HIGH WATER LEVEL |
| | KILOMETER MARKER (EXISTING, PROPOSED) |
| | R/W MARKER (EXISTING, PROPOSED) |
| | RAILWAY |
| | SLOPE |
| | BENCH MARK |
| | PERMANENT BENCH MARK (P.B.M.) |
| | POINT OF HORIZONTAL INTERSECTION |
| H | TEMPORARY SHELTER, HUT |
| 1-S-W | BUILDING, ONE - STOREY WOODEN FRAME |
| 2-S-W | BUILDING, TWO - STOREY WOODEN FRAME |
| 1-S-C | BUILDING, ONE - STOREY CONCRETE |
| 2-S-C | BUILDING, TWO - STOREY CONCRETE |
| 1-S-W (10) | COMMERCIAL BUILDING, ONE - STOREY WOODEN FRAME, 10 UNITS |
| 2-S-W (10) | COMMERCIAL BUILDING, TWO - STOREY WOODEN FRAME, 10 UNITS |
| 1-S-C (10) | COMMERCIAL BUILDING, ONE - STOREY CONCRETE STRUCTURE, 10 UNITS |
| 2-S-C (10) | COMMERCIAL BUILDING, TWO - STOREY CONCRETE STRUCTURE, 10 UNITS |
| 1-S-W | SCHOOL BUILDING, ONE - STOREY WOODEN FRAME |
| 2-S-W | SCHOOL BUILDING, TWO - STOREY WOODEN FRAME |
| 1-S-C | SCHOOL BUILDING, ONE - STOREY CONCRETE STRUCTURE |
| 2-S-C | SCHOOL BUILDING, TWO - STOREY CONCRETE STRUCTURE |

**KINGDOM OF THAILAND**
**MINISTRY OF TRANSPORT AND COMMUNICATIONS**
**DEPARTMENT OF HIGHWAYS**

STANDARD DRAWING

ABBREVIATION AND SYMBOLS

| | | |
|---|---|---|
| DESIGNED: D.O.H. & CONSULTANTS | CHECKED: | DATE JULY 1994 |
| SUBMITTED: (DIRECTOR OF LOCATION & DESIGN DIVISION) | | SCALE NONE |
| APPROVED: (DIRECTOR GENERAL) | | DWG. NO. AS-001 |
| | | SHEET NO. 1 |

# DIAGRAMMATIC PROFILES SHOWING METHODS OF ATTAINING SUPERELEVATION FOR A CURVE TO THE RIGHT

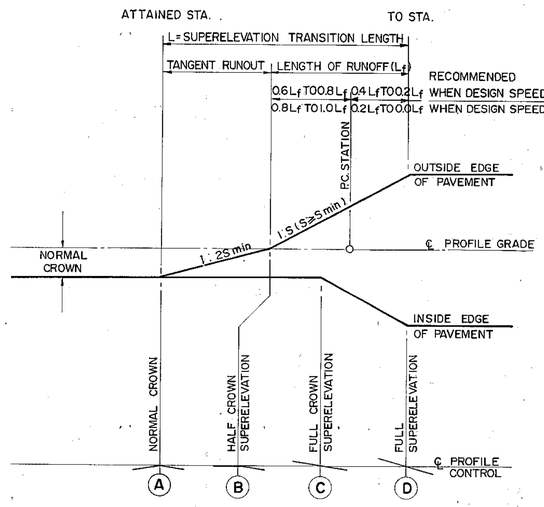


CROWNED PAVEMENT
REVOLVED ABOUT CENTERLINE

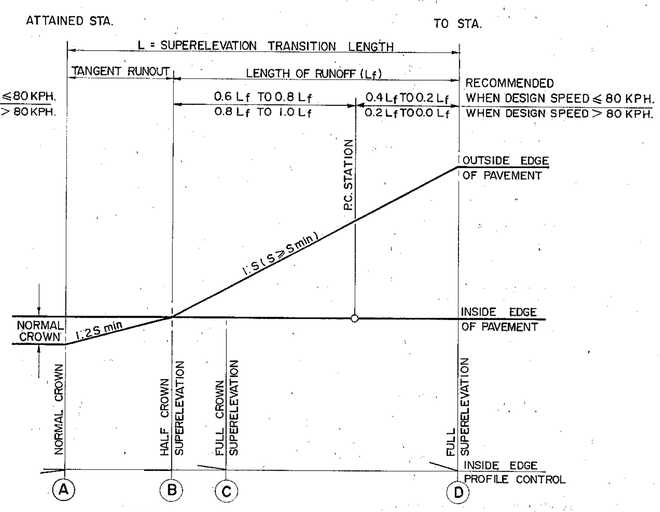


STRAIGHT CROSS SLOPE PAVEMENT
REVOLVED ABOUT INSIDE EDGE ( SINGLE LANE )

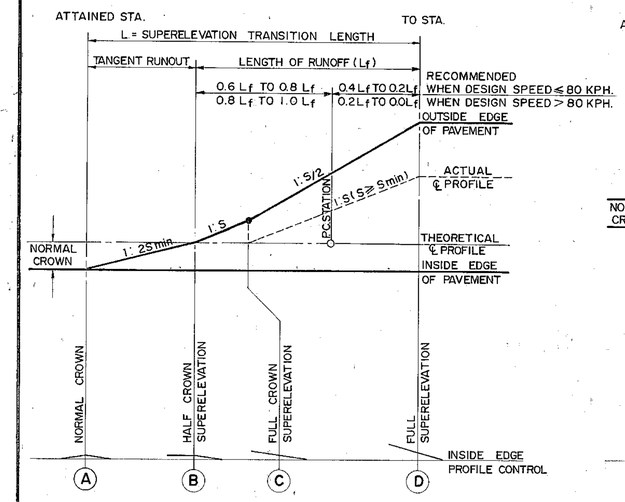


CROWNED PAVEMENT
REVOLVED ABOUT INSIDE EDGE

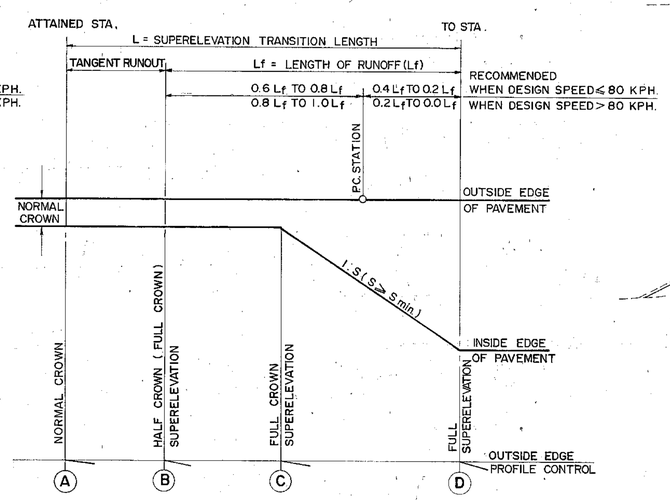


STRAIGHT CROSS SLOPE PAVEMENT
REVOLVED ABOUT OUTSIDE EDGE ( SINGLE LANE )

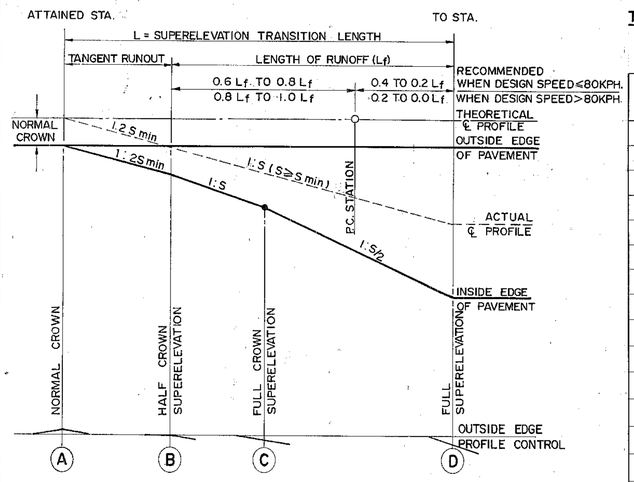


CROWNED PAVEMENT
REVOLVED ABOUT OUTSIDE EDGE

**TABLE** RELATIONSHIP OF DESIGN SPEED TO MAXIMUM RELATIVE PROFILE SLOPES BETWEEN THE EDGE OF TWO-LANE PAVEMENT AND THE CENTERLINE

| DESIGN SPEED KPH. | MAXIMUM RELATIVE SLOPES 1 : S min |
|---|---|
| 30 | 1 : 120 |
| 35 | 1 : 128 |
| 40 | 1 : 135 |
| 45 | 1 : 143 |
| 50 | 1 : 150 |
| 55 | 1 : 158 |
| 60 | 1 : 165 |
| 65 | 1 : 173 |
| 70 | 1 : 180 |
| 75 | 1 : 188 |
| 80 | 1 : 195 |
| 85 | 1 : 203 |
| 90 | 1 : 210 |
| 95 | 1 : 218 |
| 100 | 1 : 225 |
| 105 | 1 : 233 |
| 110 AND OVER | 1 : 240 |

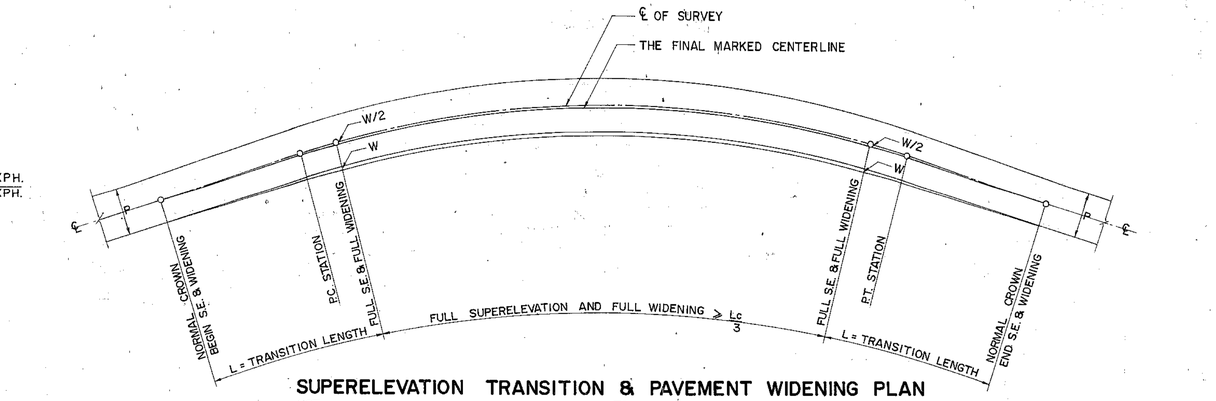


SUPERELEVATION TRANSITION & PAVEMENT WIDENING PLAN
NOT TO SCALE

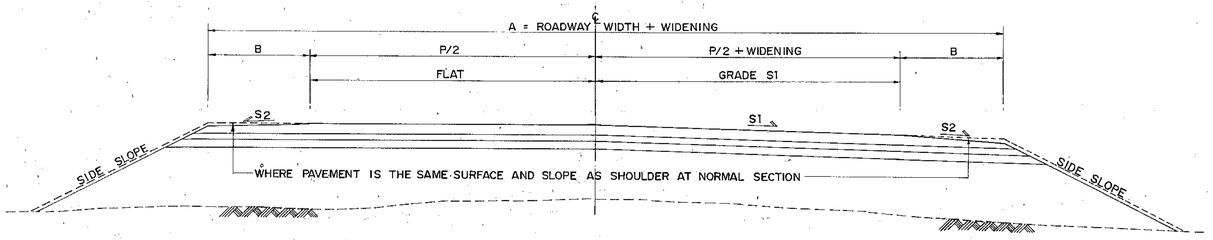


SECTION (A) HALF CROWN SUPERELEVATION
NOT TO SCALE

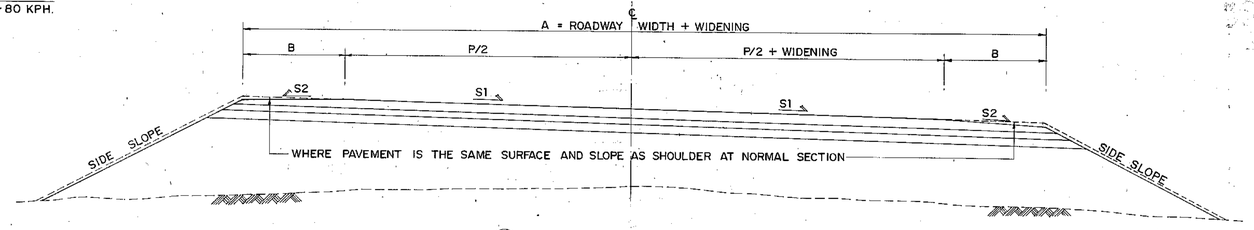


SECTION (B) FULL CROWN SUPERELEVATION
NOT TO SCALE

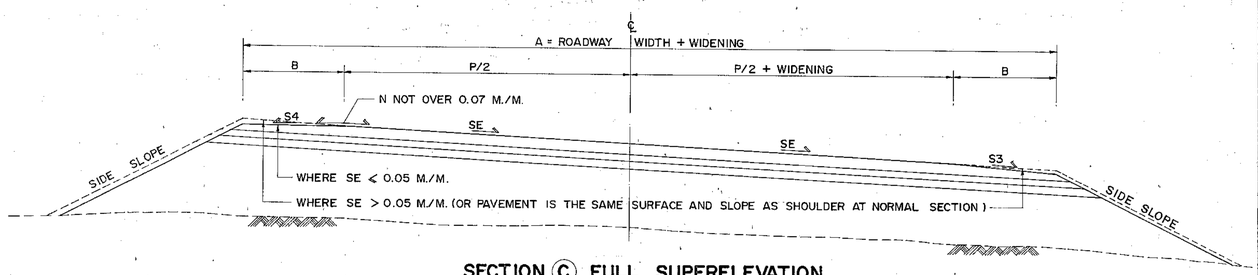


SECTION (C) FULL SUPERELEVATION
NOT TO SCALE

## NOTES :

1. THE MAXIMUM ROLLOVER OF PAVEMENT SLOPE "N" SHALL NOT EXCEED 0.07 M./M., "N" IS ALGEBRAIC DIFFERENCE IN CROSS SLOPE RATES "SE" AND "S4", WHICH SHALL BE ADJUSTED TO CONFORM TO THE SUPERELEVATION RATES (SE) WHENEVER "SE" IS GREATER THAN 0.05 M./M.
2. THE ROADWAY SHALL BE CONSTRUCTED IN ACCORDANCE WITH DETAILS SHOWN ON THE TYPICAL CROSS - SECTION , PLAN & PROFILE AND THIS DRAWING.
3. THE REQUIRED WIDENING (W) AND SUPERELEVATION RATE (SE) ARE GIVEN ON THE ALIGNMENT DRAWINGS.
4. THE RELATIONSHIP BETWEEN DESIGN SPEED AND MAXIMUM RELATIVE SLOPE ARE SHOWN IN THE TABLE.
5. MINIMUM - DESIGN SUPERELEVATION RUNOFF LENGTH FOR THREE - LANE PAVEMENTS SHOULD BE 1.2 TIMES THE CORRESPONDING LENGTH FOR TWO - LANE HIGHWAYS.
6. MINIMUM - DESIGN SUPERELEVATION RUNOFF LENGTH FOR FOUR - LANE PAVEMENTS SHOULD BE 1.5 TIMES THE CORRESPONDING LENGTH FOR TWO - LANE HIGHWAYS.
7. MINIMUM - DESIGN SUPERELEVATION RUNOFF LENGTH FOR SIX - LANE PAVEMENTS SHOULD BE 2.0 TIMES THE CORRESPONDING LENGTH FOR TWO - LANE HIGHWAYS.

**KINGDOM OF THAILAND**
MINISTRY OF TRANSPORT AND COMMUNICATIONS
DEPARTMENT OF HIGHWAYS

STANDARD DRAWING

METHOD OF ATTAINING SUPERELEVATION AND WIDENING OF PAVEMENT FOR CIRCULAR CURVE

| | | |
|---|---|---|
| DESIGNED : D.O.H. & CONSULTANTS | CHECKED : | DATE JULY 1994 |
| SUBMITTED : (DIRECTOR OF LOCATION & DESIGN DIVISION) | | SCALE NONE |
| APPROVED : FOR (DIRECTOR GENERAL) | | DWG. NO. TS - 101 |
| | | SHEET NO. 2 |

# DIAGRAMMATIC PROFILES SHOWING METHODS OF ATTAINING SUPERELEVATION FOR A CURVE TO THE RIGHT

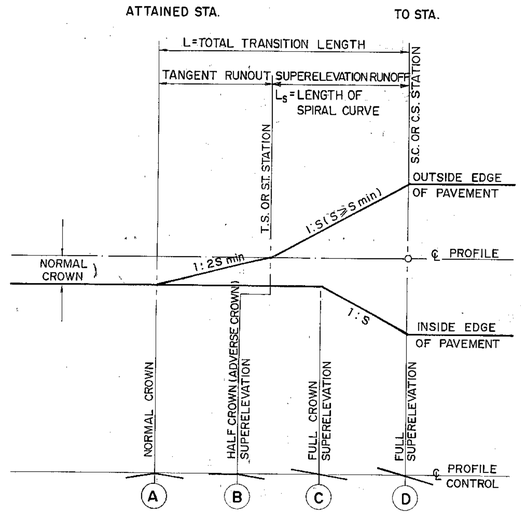


CROWNED PAVEMENT
REVOLVED ABOUT CENTERLINE

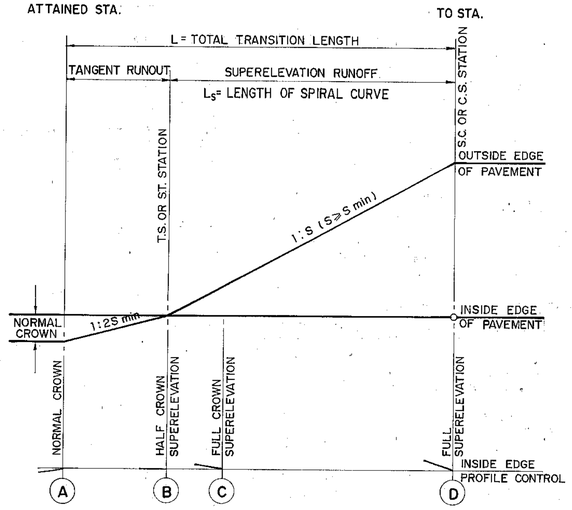


STRAIGHT CROSS SLOPE PAVEMENT
REVOLVED ABOUT INSIDE EDGE (SINGLE LANE)

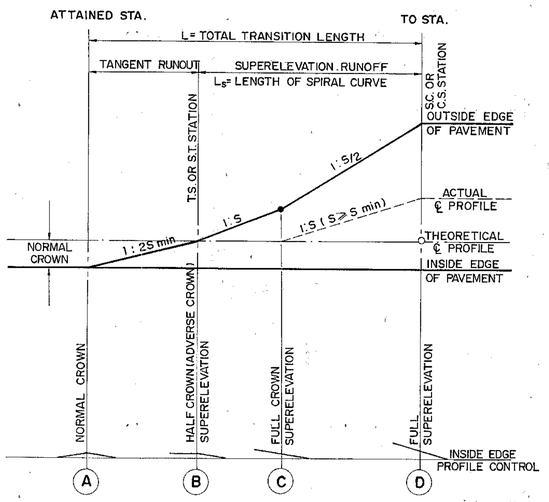


CROWNED PAVEMENT
REVOLVED ABOUT INSIDE EDGE

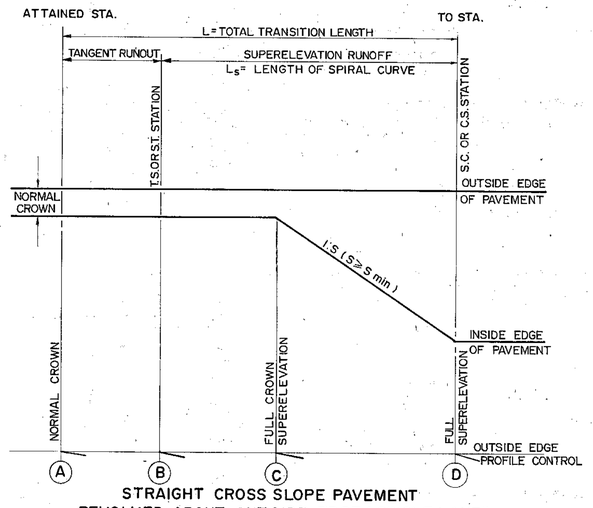


STRAIGHT CROSS SLOPE PAVEMENT
REVOLVED ABOUT OUTSIDE EDGE (SINGLE LANE)

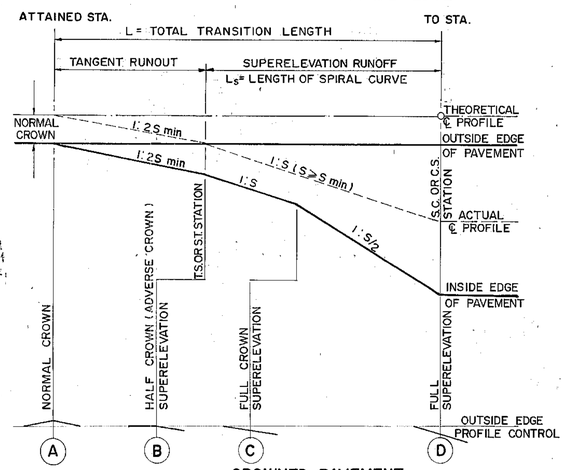


CROWNED PAVEMENT
REVOLVED ABOUT OUTSIDE EDGE

**TABLE** RELATIONSHIP OF DESIGN SPEED TO MAXIMUM RELATIVE PROFILE SLOPES BETWEEN THE EDGE OF TWO-LANE PAVEMENT AND THE CENTERLINE.

| DESIGN SPEED KPH. | MAXIMUM RELATIVE SLOPES 1 : S min |
|---|---|
| 30 | 1:120 |
| 35 | 1:128 |
| 40 | 1:135 |
| 45 | 1:143 |
| 50 | 1:150 |
| 55 | 1:158 |
| 60 | 1:165 |
| 65 | 1:173 |
| 70 | 1:180 |
| 75 | 1:188 |
| 80 | 1:195 |
| 85 | 1:203 |
| 90 | 1:210 |
| 95 | 1:218 |
| 100 | 1:225 |
| 105 | 1:233 |
| 110 AND OVER | 1:240 |

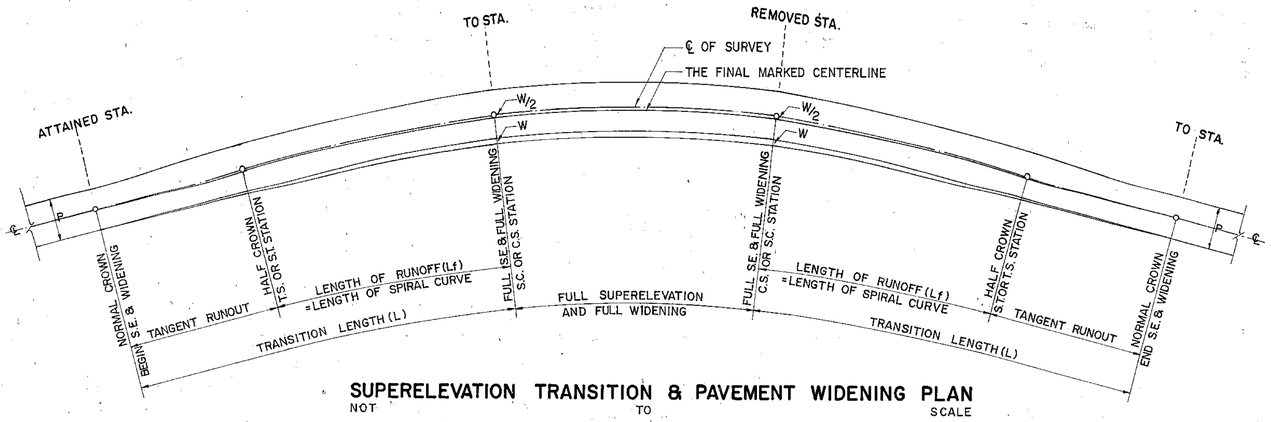


SUPERELEVATION TRANSITION & PAVEMENT WIDENING PLAN
NOT TO SCALE

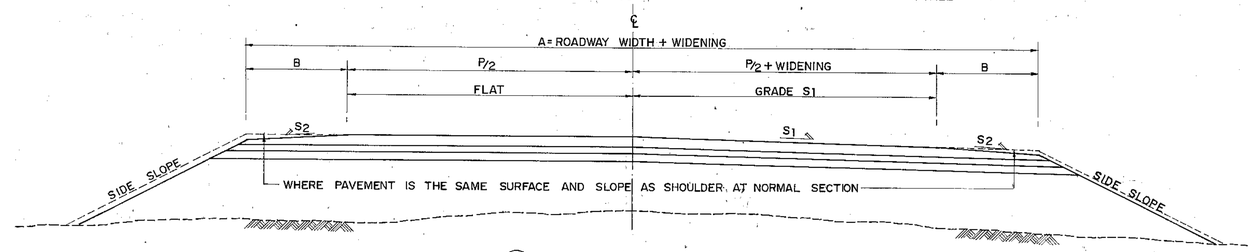


SECTION (A) HALF CROWN SUPERELEVATION
NOT TO SCALE

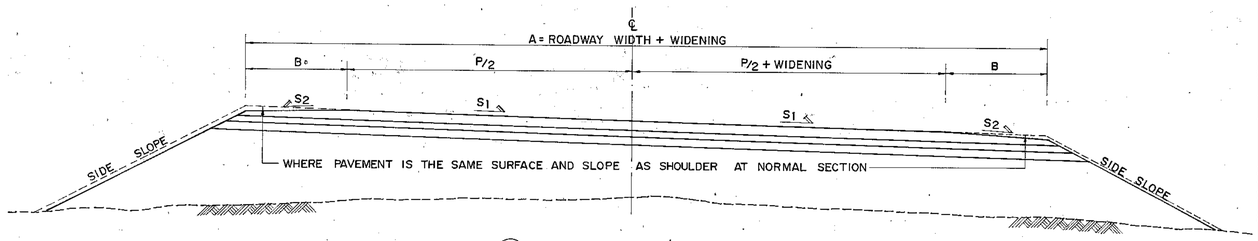


SECTION (B) FULL CROWN SUPERELEVATION
NOT TO SCALE

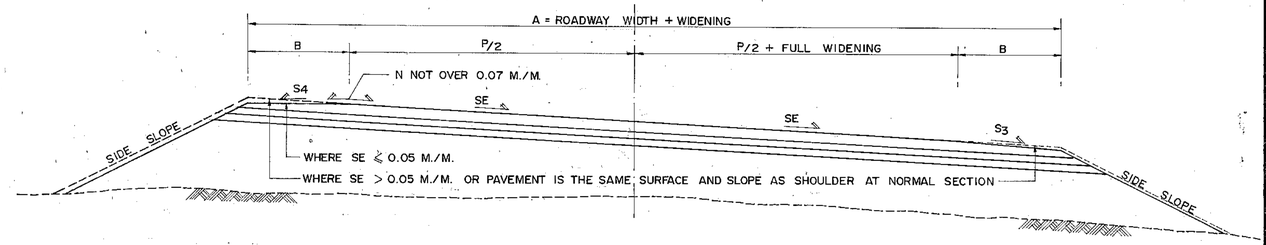


SECTION (C) FULL SUPERELEVATION

## NOTES :

1. THE MAXIMUM ROLLOVER OF PAVEMENT SLOPE "N" SHALL NOT EXCEED 0.07 M/M., "N" IS ALGEBRAIC DIFFERENCE IN CROSS SLOPE RATES "SE" AND "S4", WHICH SHALL BE ADJUSTED TO CONFORM TO THE SUPERELEVATION RATES (SE) WHENEVER "SE" IS GREATER THAN 0.05 M./M.
2. THE ROADWAY SHALL BE CONSTRUCTED IN ACCORDANCE WITH DETAILS SHOWN ON THE TYPICAL, CROSS-SECTION, PLAN & PROFILE AND THIS DRAWING.
3. THE REQUIRED WIDENING (W) AND SUPERELEVATION RATE (SE) ARE GIVEN ON THE ALIGNMENT DRAWINGS.
4. THE RELATIONSHIP BETWEEN DESIGN SPEED AND MAXIMUM RELATIVE SLOPE ARE SHOWN IN THE TABLE.
5. MINIMUM - DESIGN SUPERELEVATION RUNOFF LENGTH FOR THREE - LANE PAVEMENTS SHOULD BE 1.2 TIMES THE CORRESPONDING LENGTH FOR TWO - LANE HIGHWAYS.
6. MINIMUM - DESIGN SUPERELEVATION RUNOFF LENGTH FOR FOUR - LANE PAVEMENTS SHOULD BE 1.5 TIMES THE CORRESPONDING LENGTH FOR TWO - LANE HIGHWAYS.
7. MINIMUM - DESIGN SUPERELEVATION RUNOFF LENGTH FOR SIX - LANE PAVEMENTS SHOULD BE 2.0 TIMES THE CORRESPONDING LENGTH FOR TWO - LANE HIGHWAYS.
8. MINIMUM LENGTH OF SPIRAL CURVE

$$L_s(\min) = \frac{V^3}{48 R_c C} \text{ M.}$$

V = DESIGN SPEED (KPH.)

$R_c$ = RADIUS OF CIRCULAR CURVE (M.)

C = RATE OF INCREASE CENTRIPETAL ACCELERATION ($M/SEC^3$).

**KINGDOM OF THAILAND**
**MINISTRY OF TRANSPORT AND COMMUNICATIONS**
**DEPARTMENT OF HIGHWAYS**

STANDARD DRAWING

METHOD OF ATTAINING SUPERELEVATION AND WIDENING OF PAVEMENT FOR SPIRAL CURVE

| | | |
|---|---|---|
| DESIGNED: D.O.H. & CONSULTANTS | CHECKED: | DATE JULY 1994 |
| SUBMITTED: (DIRECTOR OF LOCATION & DESIGN DIVISION) | | SCALE NONE |
| APPROVED: for (DIRECTOR GENERAL) | | DWG. NO. TS-102 |
| | | SHEET NO. 3 |

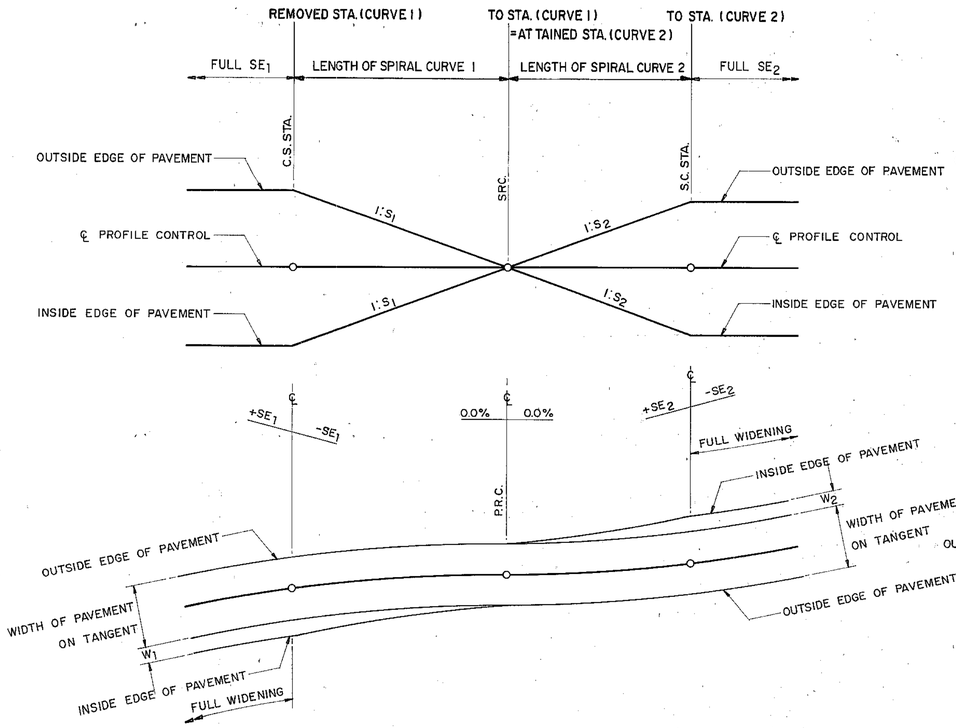


SUPERELEVATION DIAGRAM FOR REVERSE SPIRAL CURVES
NOT TO SCALE

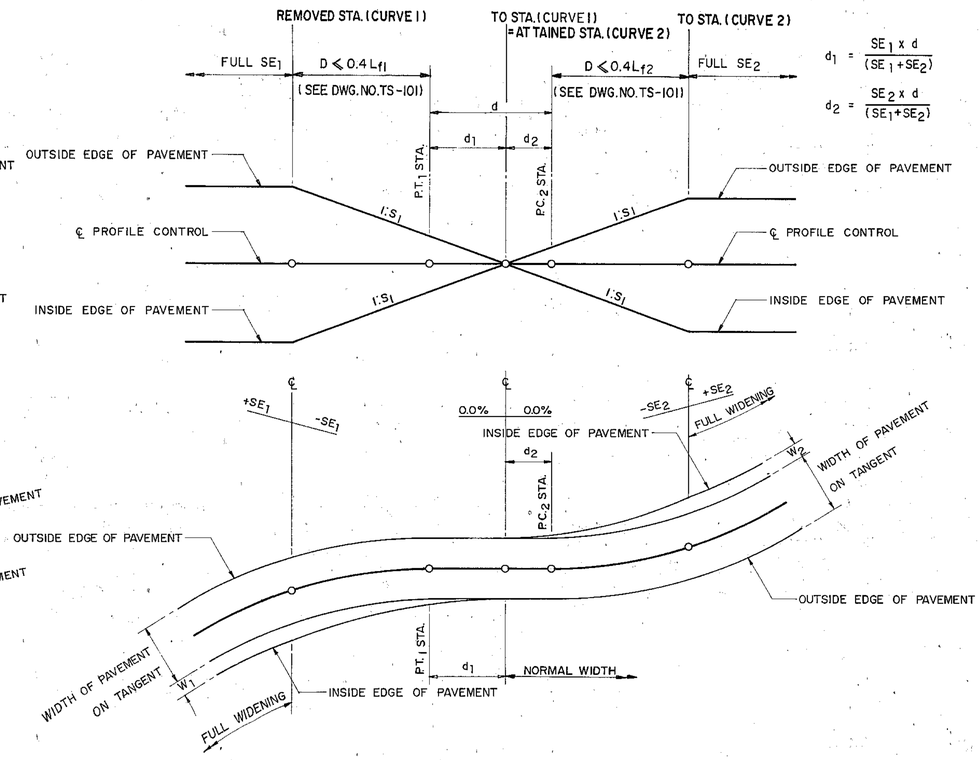


SUPERELEVATION TRANSITION DIAGRAM FOR REVERSE CURVES WITH SHORT TANGENT
NOT TO SCALE

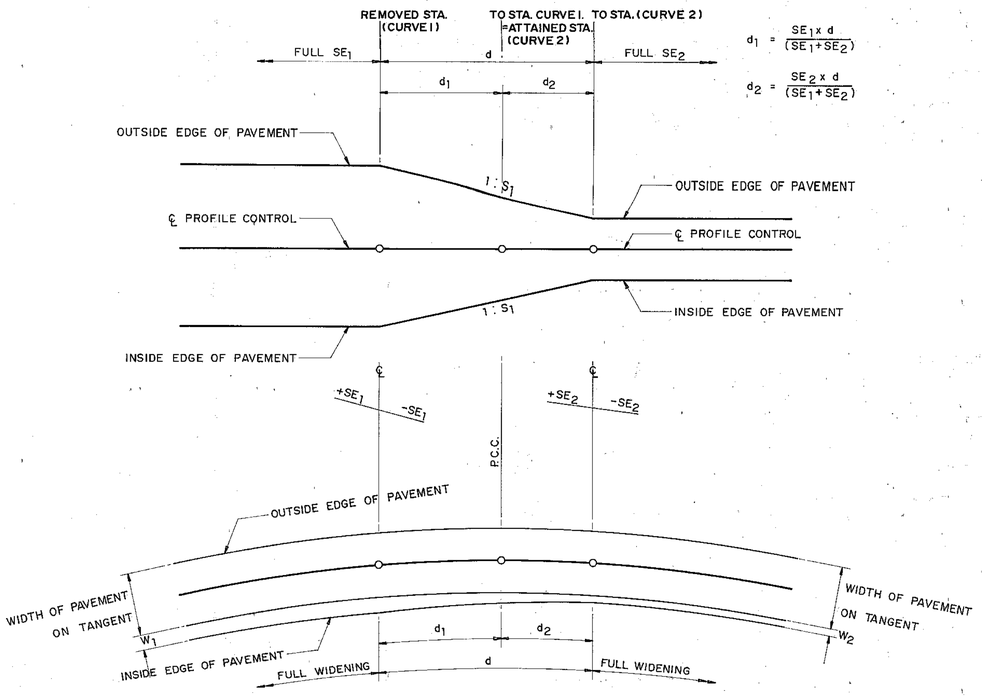


SUPERELEVATION TRANSITION DIAGRAM FOR COMPOUND CURVES
N.O.T TO SCALE

## NOTES:

1. THIS DRAWING SHALL BE USED IN COMBINATION WITH DWG. NO. TS – 101.
2. IN CASE OF THE TRANSITION LENGTH OF ADJACENT CURVES WITH OPPOSITE DIRECTION ARE OVERLAPPED "SUPERELEVATION DIAGRAM FOR REVERSE CURVES WITH SHORT TANGENT" IS APPLIED.

**KINGDOM OF THAILAND**
**MINISTRY OF TRANSPORT AND COMMUNICATIONS**
**DEPARTMENT OF HIGHWAYS**

STANDARD DRAWING

METHOD OF ATTAINING SUPERELEVATION AND WIDENING OF PAVEMENT FOR COMPOUND AND REVERSE CURVES

| | | |
|---|---|---|
| DESIGNED : D.O.H. & CONSULTANTS | CHECKED : | DATE JULY 1994 |
| SUBMITTED : (DIRECTOR OF LOCATION & DESIGN DIVISION) | | SCALE NONE |
| | | DWG. NO. TS-103 |
| APPROVED : FOR (DIRECTOR GENERAL) | | SHEET NO. 4 |

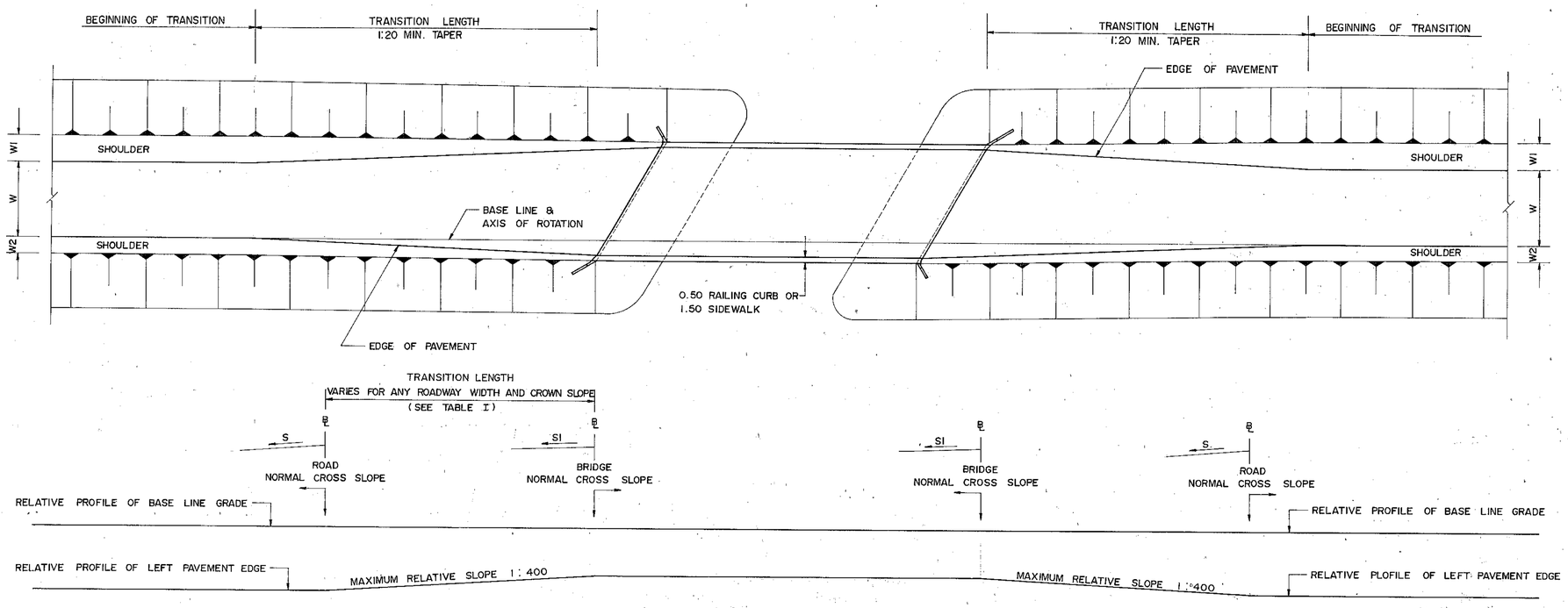


## BRIDGE APPROACH TRANSITION TYPE I

NOT TO SCALE

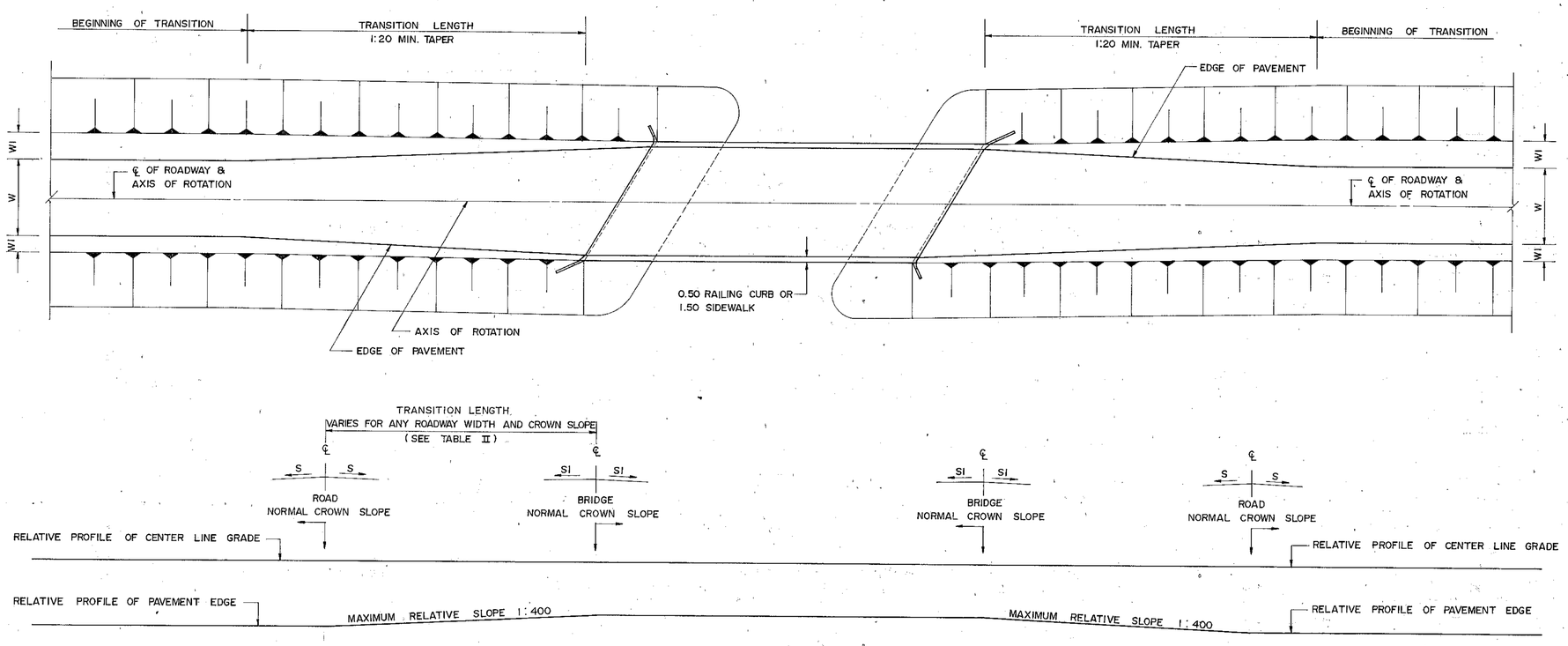


## BRIDGE APPROACH TRANSITION TYPE II

NOT TO SCALE

## TABLE I

| TRANSITION LENGTH AT BRIDGE APPROACH TYPE I | | | | |
|---|---|---|---|---|
| ROADWAY CROSS SLOPE (S) | ROADWAY WIDTH | | | |
| | 5.50 | 6.00 | 6.50 | 7.00 |
| 2.0% | 11.00 | 12.00 | 13.00 | 14.00 |
| 2.5% | 22.00 | 24.00 | 26.00 | 28.00 |
| 3.0% | 33.00 | 36.00 | 39.00 | 42.00 |
| 3.5% | 44.00 | 48.00 | 52.00 | 56.00 |

## TABLE II

| TRANSITION LENGTH AT BRIDGE APPROACH TYPE II | | | | |
|---|---|---|---|---|
| ROADWAY CROWN SLOPE (S) | ROADWAY WIDTH | | | |
| | 5.50 | 6.00 | 6.50 | 7.00 |
| 2.0% | 5.50 | 6.00 | 6.50 | 7.00 |
| 2.5% | 11.00 | 12.00 | 13.00 | 14.00 |
| 3.0% | 16.50 | 18.00 | 19.50 | 21.00 |
| 3.5% | 22.00 | 24.00 | 26.00 | 28.00 |

## NOTES :

1. DIMENSION ARE IN METRES UNLESS OTHERWISE INDICATED.
2. SI = BRIDGE NORMAL CROWN OR CROSS SLOPE , 1.5%
   S = ROAD NORMAL CROWN OR CROSS SLOPE
   W1 = WIDTH OF OUTER SHOULDER
   W2 = WIDTH OF INNER SHOULDER

# KINGDOM OF THAILAND
MINISTRY OF TRANSPORT AND COMMUNICATIONS
DEPARTMENT OF HIGHWAYS

STANDARD DRAWING

BRIDGE APPROACH TRANSITION

| | | |
|---|---|---|
| DESIGNED : D.O.H. & CONSULTANTS | CHECKED : | DATE JULY 1994 |
| SUBMITTED : (DIRECTOR OF LOCATION & DESIGN DIVISION) | | SCALE NONE |
| | | DWG. NO. TS-201 |
| APPROVED : (DIRECTOR GENERAL) | | SHEET NO. 5 |

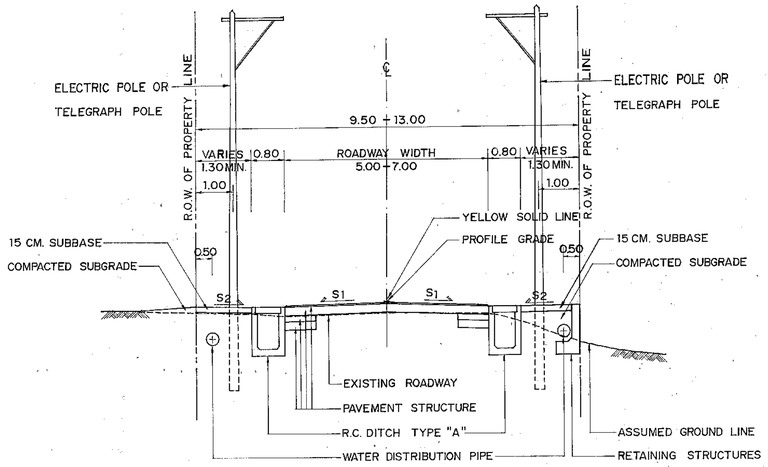


## TYPICAL CROSS-SECTION FOR R.O.W. 9.50 M.MIN.(ALTERNATIVE I)

SCALE 1 : 75

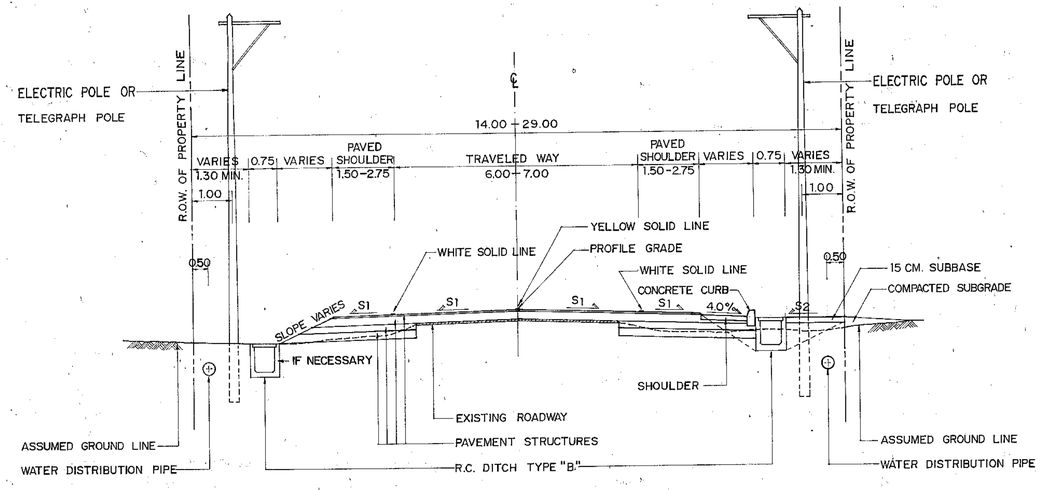


## TYPICAL CROSS-SECTION FOR R.O.W. 14.00 M.MIN.(ALTERNATIVE I)

SCALE 1 : 75

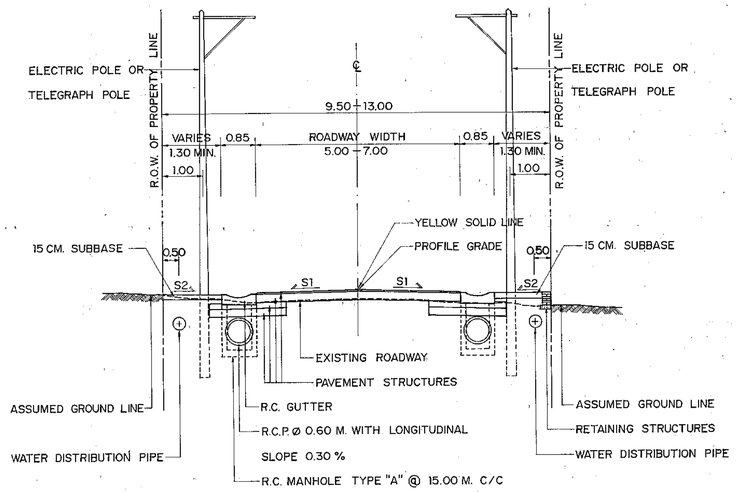


## TYPICAL CROSS-SECTION FOR R.O.W. 9.50 M.MIN.(ALTERNATIVE II)

SCALE 1 : 75

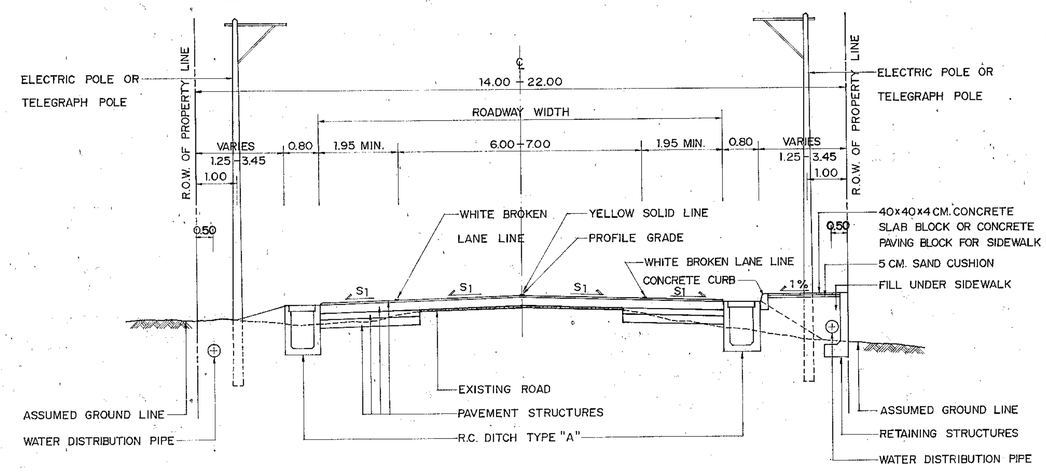


## TYPICAL CROSS-SECTION FOR R.O.W. 14.00 M.MIN.(ALTERNATIVE II)

SCALE 1 : 75

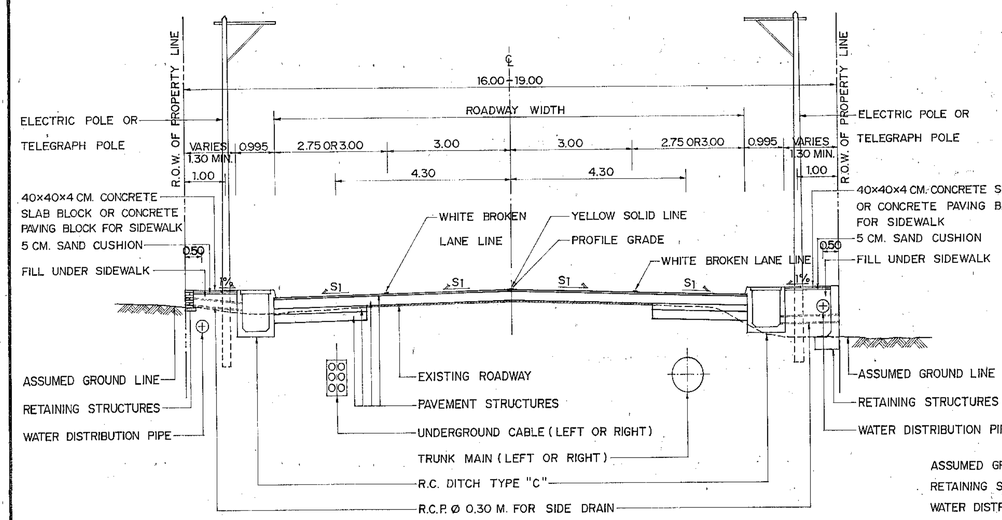


## ULTIMATE TYPICAL CROSS-SECTION FOR R.O.W. 16.00 M. MIN.

SCALE 1 : 75

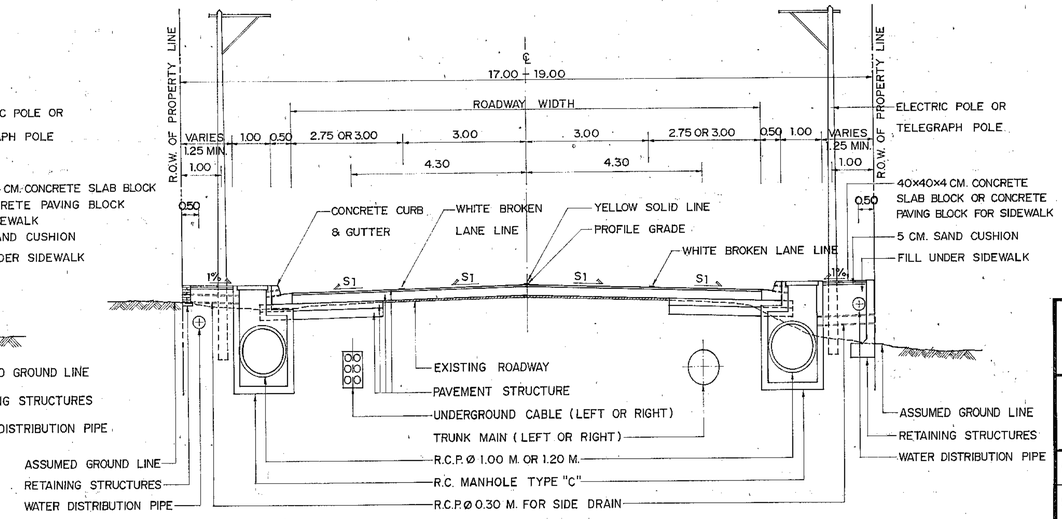


## ULTIMATE TYPICAL CROSS-SECTION FOR R.O.W. 17.00 - 19.00 M.

SCALE 1 : 75

## NOTES :

1. DIMENSIONS ARE IN METRES UNLESS OTHERWISE INDICATED.
2. $S_1$ = NORMAL CROWN SLOPE, AS SHOWN ON TYPICAL CROSS-SECTION
   $S_2$ = 5% IN CASE OF SOIL AGGREGATE SHOULDER
   = 1% IN CASE OF CONCRETE SLAB BLOCK OR R.C. SLAB FOR SIDEWALK
3. THE POSITION OF UTILITY SHALL BE ADJUSTED IN THE FIELD AS DIRECTED BY THE ENGINEER.

**KINGDOM OF THAILAND**
**MINISTRY OF TRANSPORT AND COMMUNICATIONS**
**DEPARTMENT OF HIGHWAYS**

STANDARD DRAWING

TYPICAL CROSS-SECTION AT VILLAGE SECTION-I

| | | |
|---|---|---|
| DESIGNED : D.O.H. & CONSULTANTS | CHECKED : | DATE JULY 1994 |
| SUBMITTED : (DIRECTOR OF LOCATION & DESIGN DIVISION) | | SCALE 1 : 75 |
| | | DWG. NO. TS-301 |
| APPROVED : (DIRECTOR GENERAL) | | SHEET NO. 6 |

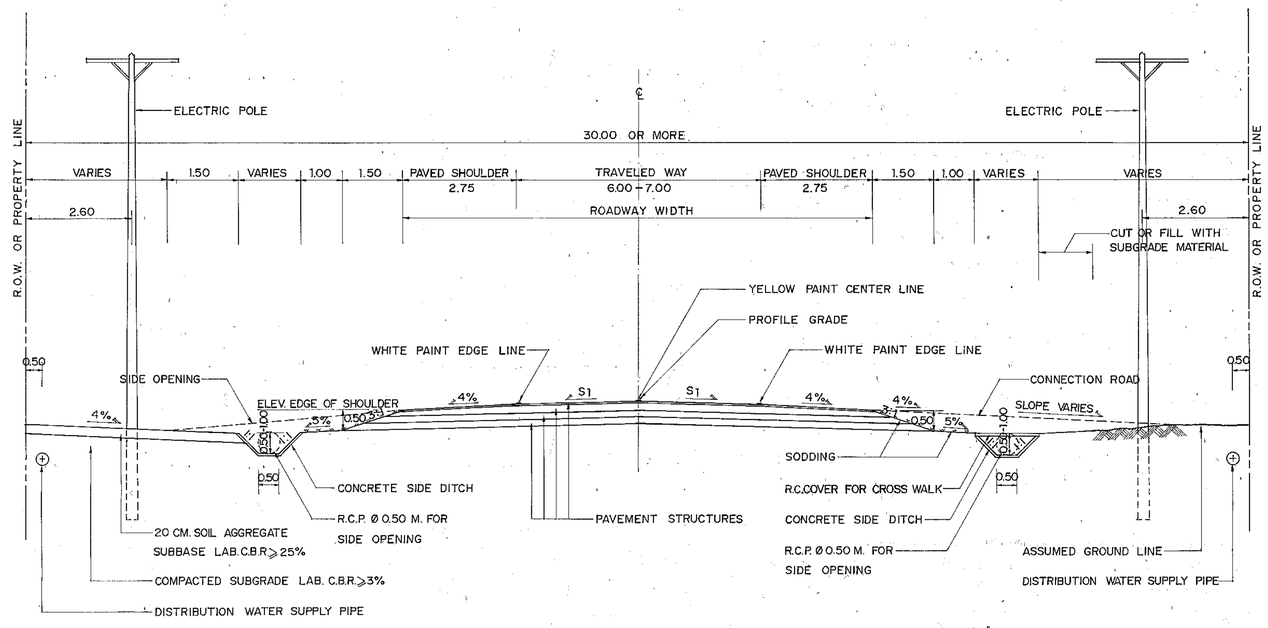


## MINIMUM DESIGN FOR R.O.W. 30.00 M. OR MORE

SCALE 1 : 75

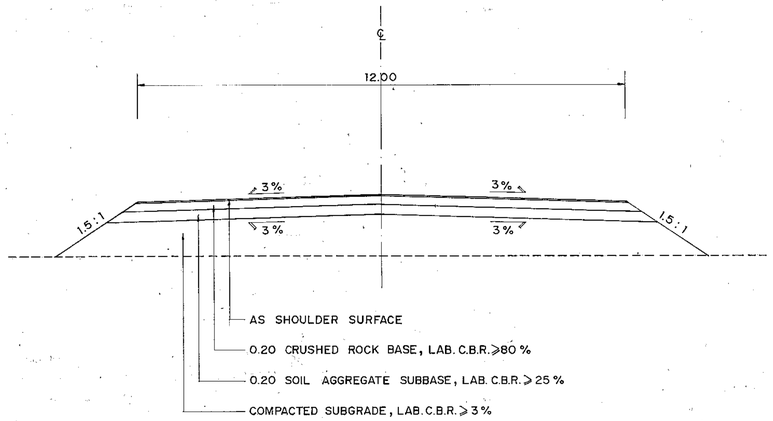


## TYPICAL CROSS - SECTION FOR SIDE OPENING

SCALE 1 : 75

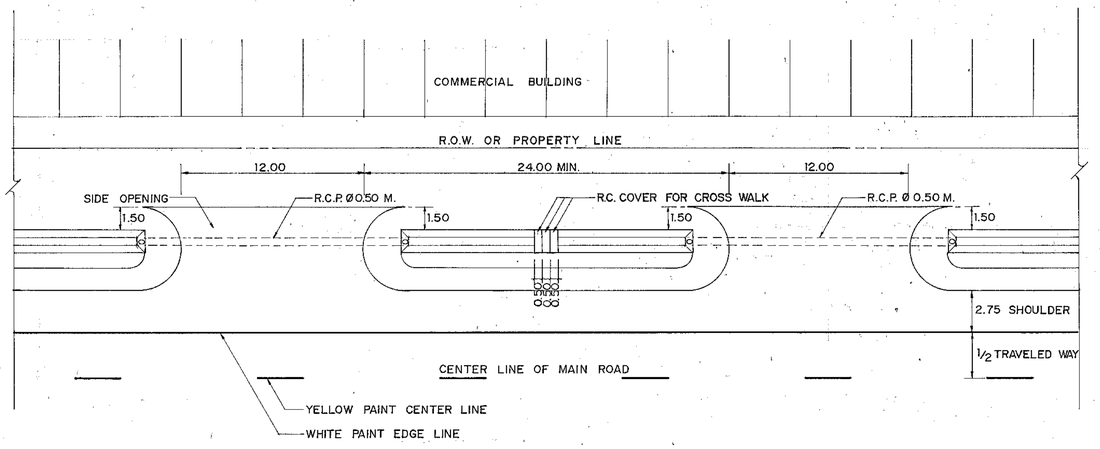


## PLAN OF SIDE OPENING

SCALE 1 : 250

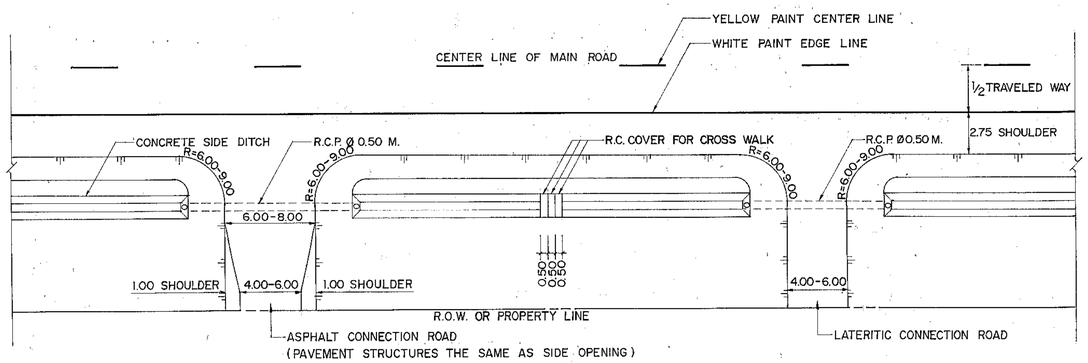


## PLAN OF CONNECTION ROAD

SCALE 1 : 250

**NOTE :**

1. DIMENSIONS ARE IN METERS UNLESS OTHERWISE INDICATED

# KINGDOM OF THAILAND
## MINISTRY OF TRANSPORT AND COMMUNICATIONS
## DEPARTMENT OF HIGHWAYS

STANDARD DRAWING

TYPICAL CROSS - SECTION AT VILLAGE SECTION - II

| | | |
|---|---|---|
| DESIGNED : D.O.H. & CONSULTANTS | CHECKED : | DATE JULY 1994 |
| SUBMITTED : (DIRECTOR OF LOCATION & DESIGN DIVISION) | | SCALE AS SHOWN |
| | | DWG. NO. TS-302 |
| APPROVED : (DIRECTOR GENERAL) | | SHEET NO. 7 |

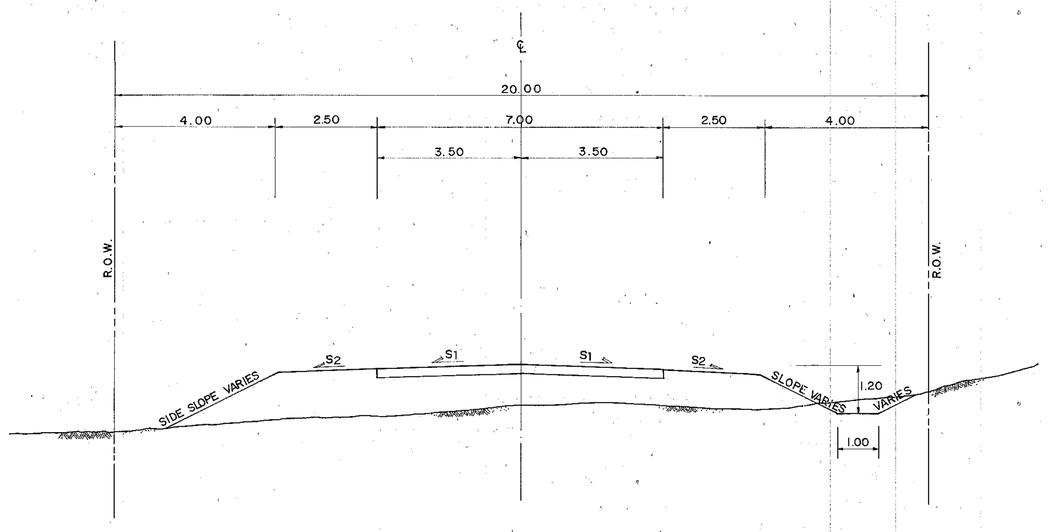


## PROPOSED 2 - LANE ( FIRST STAGE )

SCALE 1:75

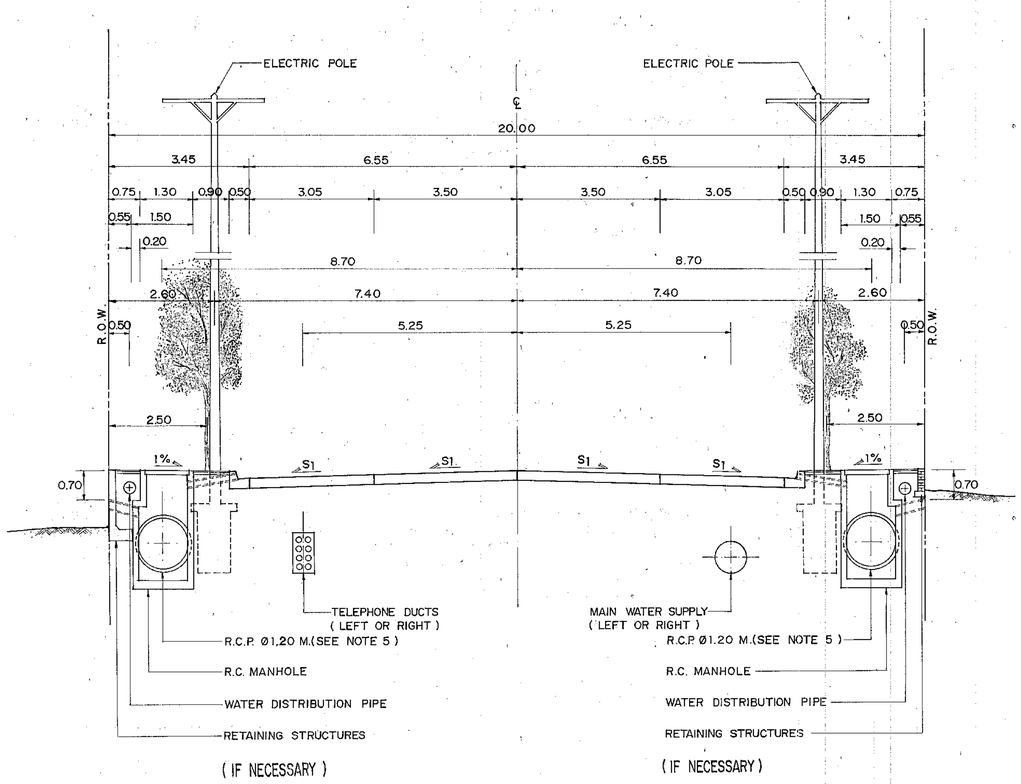


## PROPOSED 4 - LANE ( ULTIMATE STAGE )

SCALE 1:75

## NOTES :

1. ALL DIMENSIONS ARE IN METERS UNLESS OTHERWISE INDICATED.
2. THIS DRAWING IS GUIDANCE ONLY. THE DIMENSION AND LOCATION OF UTILITIES MAY BE ADJUSTED TO SUIT THE FIELD CONDITION .
3. TELEPHONE DUCT AND MAIN WATER SUPPLY SHALL BE LOCATED ALTERNATELY.
4. HEIGHT OF ELECTRIC POLE SHALL BE NOT MORE THAN 22.00 M. OR WIDTH OF FOOTING SHALL BE NOT MORE THAN 1.10 M. FOR TYPICAL AS SHOWN ON THIS DRAWING.
5. BOX CULVERT SIZE 1.20 x 1.20 M. SHALL BE ALTERNATED FOR DRAINAGE STRUCTURE OR R.C.P. CULVERT Ø 1.00 M. SHALL BE SUBSTITUTED IN CASE OF NECESSARY DRAINAGE IS LOW .
6. CRITERIA FOR CONSIDERATION UTILITIES LOCATION
   - 6.1 AS SHOWN ON THIS DRAWING UTILITIES SHALL BE LOCATED FOR NEW CONSTRUCTION HIGHWAYS OR NO EXISTING UTILITIES. WHEN UTILITIES SHALL BE CONSTRUCTED MUST NOT DAMAGE TO EXISTING ROADWAY OR EXISTING UTILITY .
   - 6.2 IN CASE OF EXISTING UTILITIES ARE LOCATED AND NEW UTILITIES ARE NOT DAMAGE TO EXISTING ROADWAY OR EXISTING UTILITIES , THE NEW UTILITIES ARE LOCATED AS SHOWN ON THIS DRAWING.
   - 6.3 IN CASE OF EXISTING UTILITIES ARE LOCATED BUT NEW UTILITIES CAN NOT BE CONSTRUCTED, THE OPTIMUM LOCATION OF NEW UTILITIES SHALL BE CONSIDERED WITH THE TYPICAL CROSS - SECTION OF ROADWAY FOR ULTIMATE STAGE IN THE FUTURE.

**KINGDOM OF THAILAND**
**MINISTRY OF TRANSPORT AND COMMUNICATIONS**
**DEPARTMENT OF HIGHWAYS**

STANDARD DRAWING

# TYPICAL ROADWAY CROSS - SECTION FOR R.O.W. WIDTH 20.00 M.

| | | |
|---|---|---|
| DESIGNED: D.O.H. & CONSULTANTS | CHECKED: | DATE JULY 1994 |
| SUBMITTED: (DIRECTOR OF LOCATION & DESIGN DIVISION) | | SCALE 1:75 |
| | | DWG. NO. TS-303 |
| APPROVED: (DIRECTOR GENERAL) | | SHEET NO. 8 |

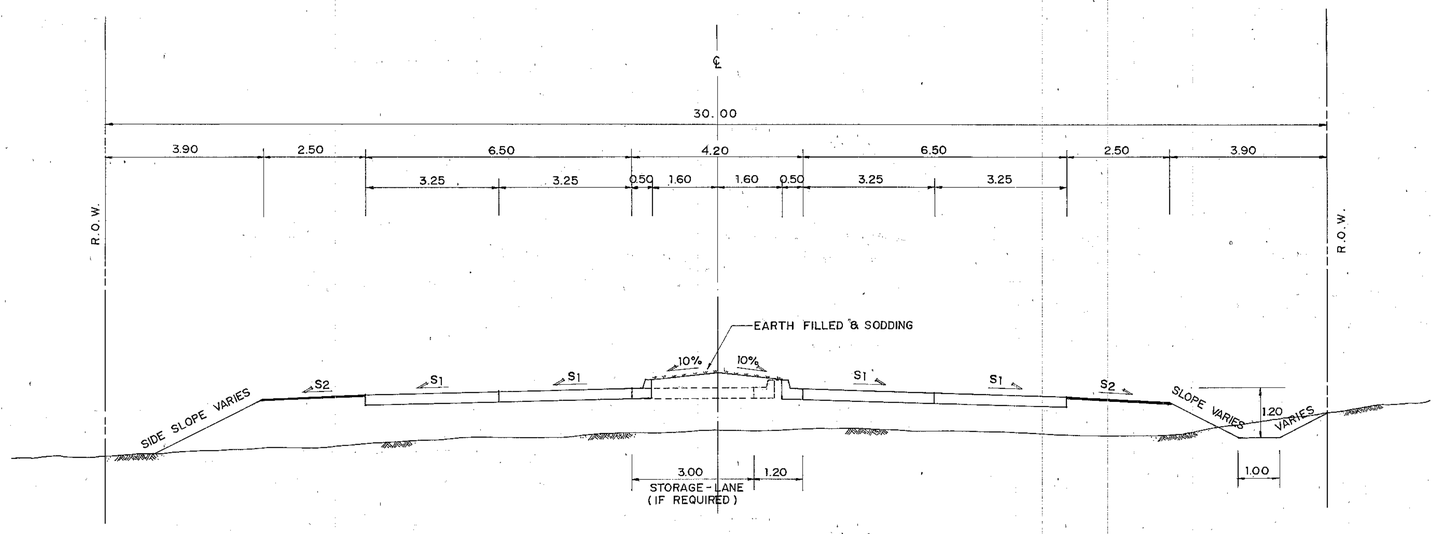


## PROPOSED 4-LANE DIVIDED (FIRST STAGE)

SCALE 1 : 75

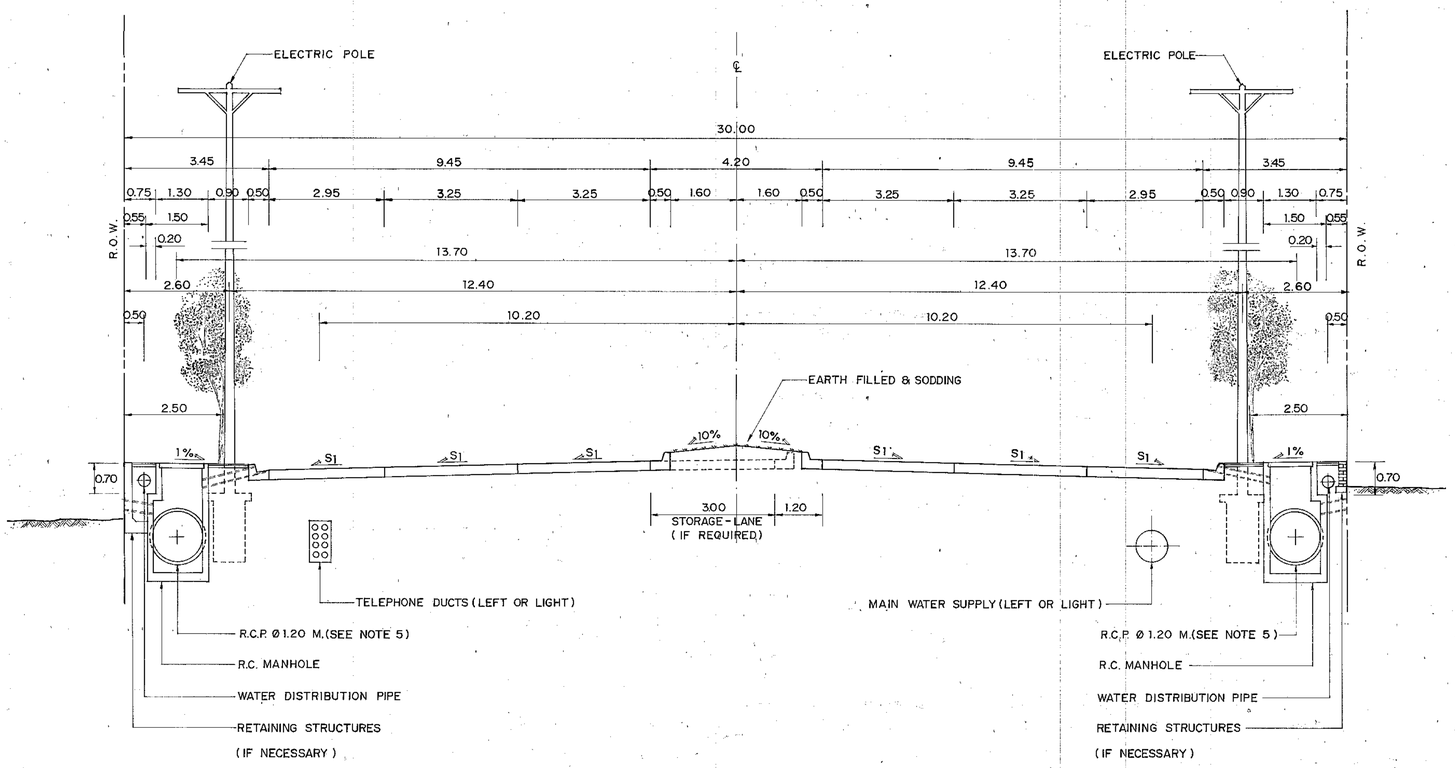


## PROPOSED 4-LANE DIVIDED (ULTIMATE STAGE)

SCALE 1 : 75

## NOTES :

1. ALL DIMENSIONS ARE IN METERS UNLESS OTHERWISE INDICATED.
2. THIS DRAWING IS GUIDANCE ONLY. THE DIMENSION AND LOCATION OF UTILITIES MAY BE ADJUSTED TO SUIT THE FIELD CONDITION.
3. TELEPHONE DUCT AND MAIN WATER SUPPLY SHALL BE LOCATED ALTERNATELY.
4. HEIGHT OF ELECTRIC POLE SHALL BE NOT MORE THAN 22.00 M. OR WIDTH OF FOOTING SHALL BE NOT MORE THAN 1.10 M. FOR TYPICAL AS SHOWN ON THIS DRAWING.
5. BOX CULVERT SIZE 1.20 x 1.20 M. SHALL BE ALTERNATED FOR DRAINAGE STRUCTURE OR R.C.P. CULVERT Ø 1.00 M. SHALL BE SUBSTITUTED IN CASE OF NECESSARY DRAINAGE IS LOW.
6. CRITERIA FOR CONSIDERATION UTILITIES LOCATION
   - 6.1 AS SHOWN ON THIS DRAWING UTILITIES SHALL BE LOCATED FOR NEW CONSTRUCTION HIGHWAYS OR NO EXISTING UTILITIES. WHEN UTILITIES SHALL BE CONSTRUCTED MUST NOT DAMAGE TO EXISTING ROADWAY OR EXISTING UTILITY.
   - 6.2 IN CASE OF EXISTING UTILITIES ARE LOCATED AND NEW UTILITIES ARE NOT DAMAGE TO EXISTING ROADWAY OR EXISTING UTILITIES, THE NEW UTILITIES ARE LOCATED AS SHOWN ON THIS DRAWING.
   - 6.3 IN CASE OF EXISTING UTILITIES ARE LOCATED BUT NEW UTILITIES CAN NOT BE CONSTRUCTED, THE OPTIMUM LOCATION OF NEW UTILITIES SHALL BE CONSIDERED WITH THE TYPICAL CROSS - SECTION OF ROADWAY FOR ULTIMATE STAGE IN THE FUTURE.

# KINGDOM OF THAILAND

MINISTRY OF TRANSPORT AND COMMUNICATIONS
DEPARTMENT OF HIGHWAYS

STANDARD DRAWING

TYPICAL ROADWAY CROSS - SECTION
FOR R.O.W. WIDTH 30.00 M.

| | | |
|---|---|---|
| DESIGNED : D.O.H. & CONSULTANTS | CHECKED : | DATE JULY 1994 |
| SUBMITTED : (DIRECTOR OF LOCATION & DESIGN DIVISION) | | SCALE 1 : 75 |
| APPROVED : (DIRECTOR GENERAL) | | DWG. NO. TS-304 |
| | | SHEET NO. 9 |

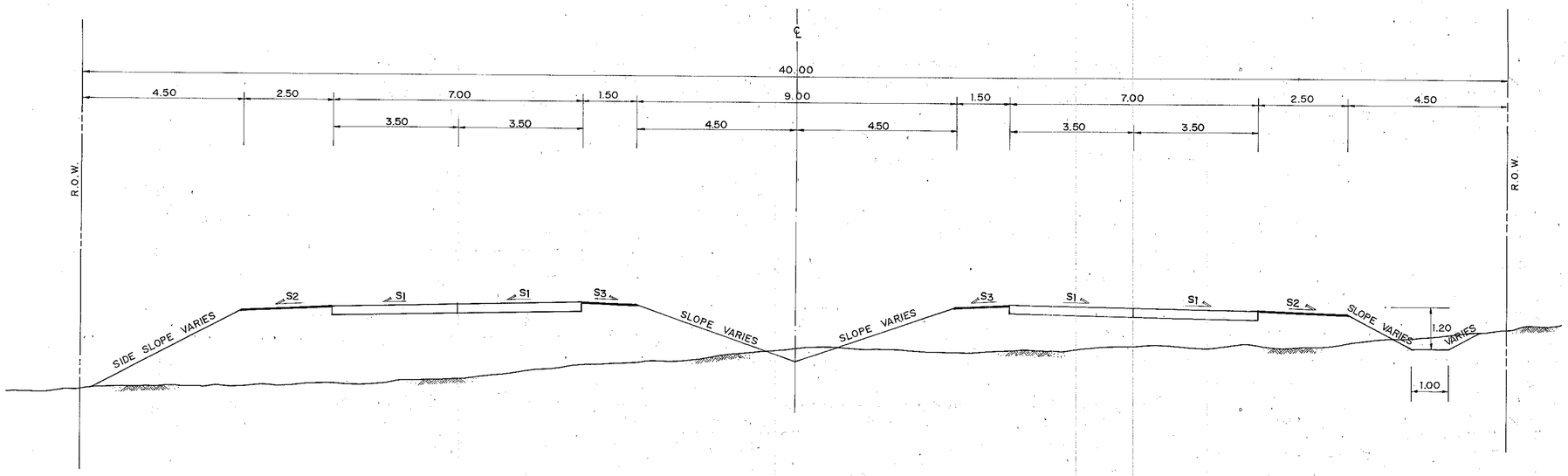


## PROPOSED 4 - LANE DIVIDED (FIRST STAGE)

SCALE 1 : 75

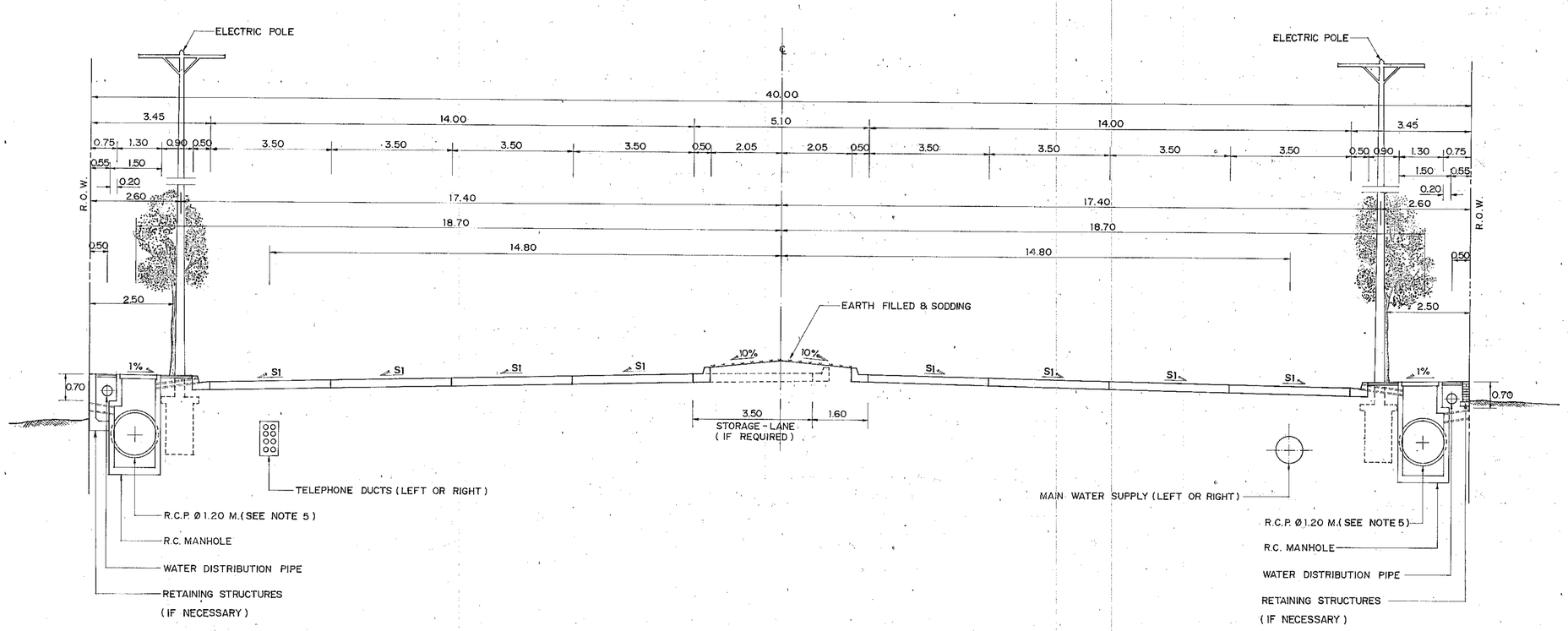


## PROPOSED 8 - LANE DIVIDED (ULTIMATE STAGE)

SCALE 1 : 75

## NOTES :

1. ALL DIMENSIONS ARE IN METERS UNLESS OTHERWISE INDICATED.
2. THIS DRAWING IS GUIDANCE ONLY. THE DIMENSION AND LOCATION OF UTILITIES MAY BE ADJUSTED TO SUIT THE FIELD CONDITION.
3. TELEPHONE DUCT AND MAIN WATER SUPPLY SHALL BE LOCATED ALTERNATELY.
4. HEIGHT OF ELECTRIC POLE SHALL BE NOT MORE THAN 22.00 M. OR WIDTH OF FOOTING SHALL BE NOT MORE THAN 1.10 M. FOR TYPICAL AS SHOWN ON THIS DRAWING.
5. BOX CULVERT SIZE 1.20 x 1.20 M. SHALL BE ALTERNATED FOR DRAINAGE STRUCTURE OR R.C.P. CULVERT Ø 1.00 M. SHALL BE SUBSTITUTED IN CASE OF NECESSARY DRAINAGE IS LOW.
6. CRITERIA FOR CONSIDERATION UTILITIES LOCATION
   - 6.1 AS SHOWN ON THIS DRAWING UTILITIES SHALL BE LOCATED FOR NEW CONSTRUCTION HIGHWAYS OR NO EXISTING UTILITIES. WHEN UTILITIES SHALL BE CONSTRUCTED MUST NOT DAMAGE TO EXISTING ROADWAY OR EXISTING UTILITY.
   - 6.2 IN CASE OF EXISTING UTILITIES ARE LOCATED AND NEW UTILITIES ARE NOT DAMAGE TO EXISTING ROADWAY OR EXISTING UTILITIES, THE NEW UTILITIES ARE LOCATED AS SHOWN ON THIS DRAWING.
   - 6.3 IN CASE OF EXISTING UTILITIES ARE LOCATED BUT NEW UTILITIES CAN NOT BE CONSTRUCTED, THE OPTIMUM LOCATION OF NEW UTILITIES SHALL BE CONSIDERED WITH THE TYPICAL CROSS - SECTION OF ROADWAY FOR ULTIMATE STAGE IN THE FUTURE.

# KINGDOM OF THAILAND

**MINISTRY OF TRANSPORT AND COMMUNICATIONS**
**DEPARTMENT OF HIGHWAYS**

STANDARD DRAWING

TYPICAL ROADWAY CROSS - SECTION
FOR R.O.W. WIDTH 40.00 M.

| | | |
|---|---|---|
| DESIGNED: D.O.H. & CONSULTANTS | CHECKED: | DATE JULY 1994 |
| SUBMITTED: (DIRECTOR OF LOCATION & DESIGN DIVISION) | | SCALE 1 : 75 |
| APPROVED: (DIRECTOR GENERAL) | | DWG. NO. TS-305 |
| | | SHEET NO. 10 |

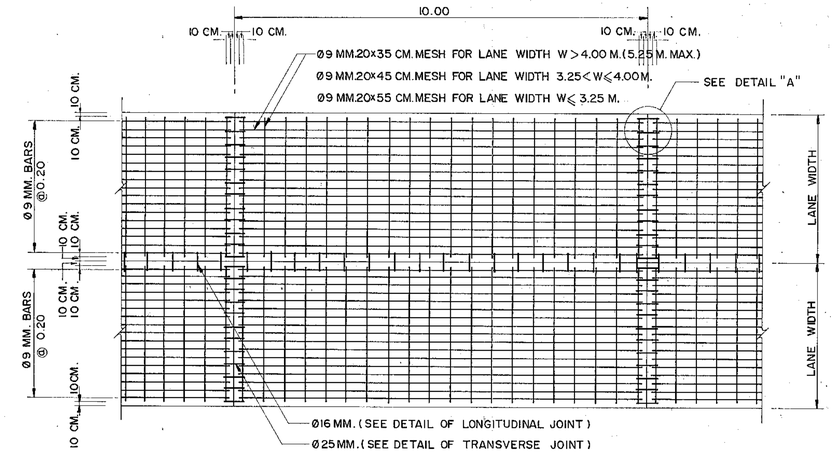


## PLAN OF REINFORCED CONCRETE PAVEMENT

SCALE 1 : 75

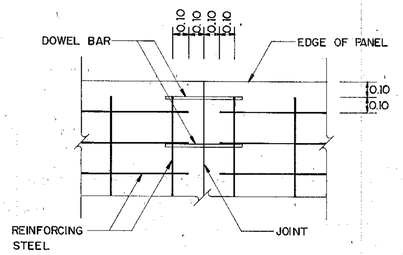


## DETAIL "A"

SCALE 1 : 20

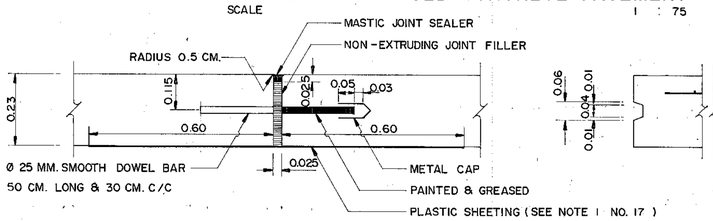


## DETAIL OF EXPANSION JOINT

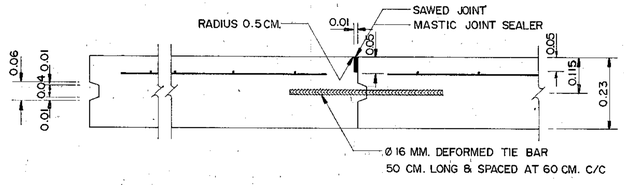


## DETAIL OF LONGITUDINAL JOINT

SCALE 1 : 10

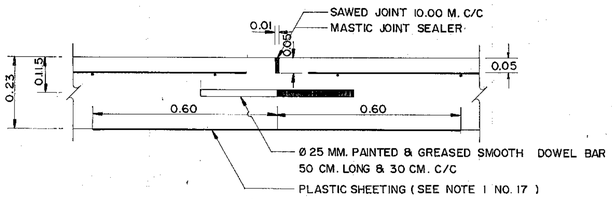


## DETAIL OF CONTRACTION JOINT

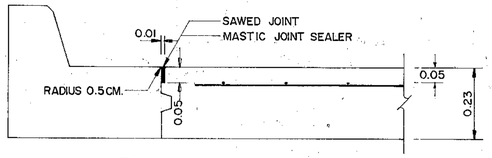


## DETAIL OF DUMMY JOINT

SCALE 1 : 10

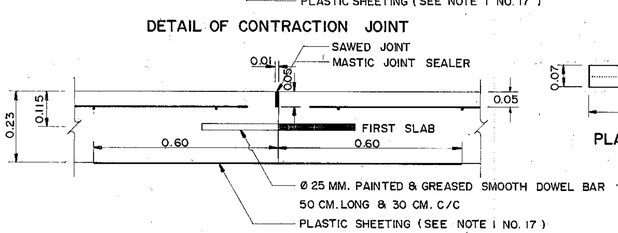


## DETAIL OF CONSTRUCTION JOINT

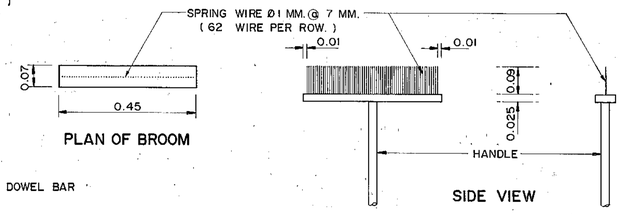


## DETAIL OF BROOM SURFACE CONCRETE PAVEMENT

SCALE 1 : 10

## DETAIL OF TRANSVERSE JOINTS

SCALE 1 : 10

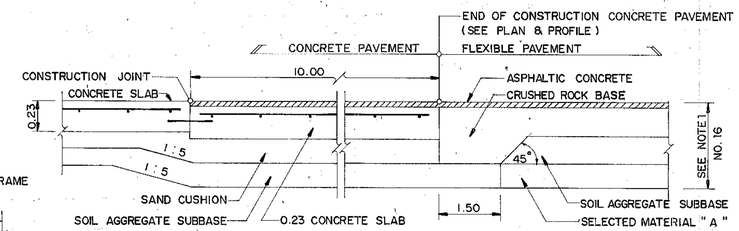


## DETAIL OF JOINT BETWEEN CONCRETE PAVEMENT AND FLEXIBLE PAVEMENT

NOT TO SCALE

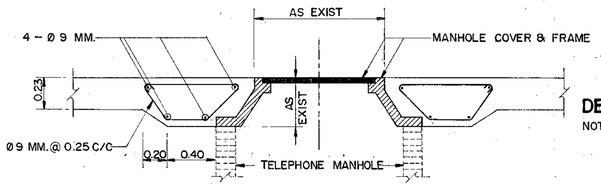


## EDGE DETAIL OF CONCRETE PAVEMENT AT TELEPHONE MANHOLE

NOT TO SCALE

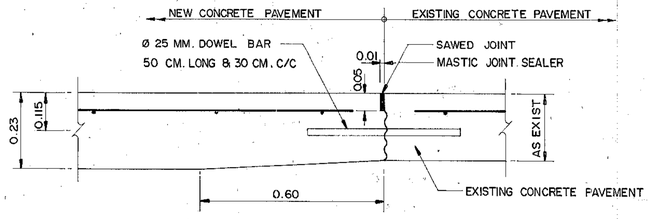


## DETAIL OF TRANSVERSE JOINT BETWEEN NEW AND EXISTING CONCRETE PAVEMENT

SCALE 1 : 25

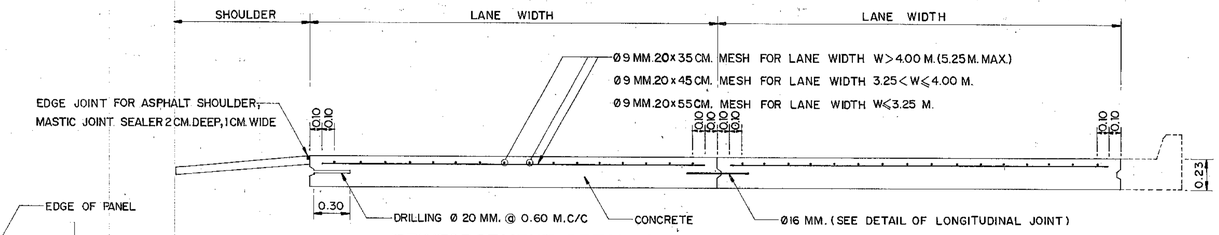


## REINFORCEMENT DETAIL OF CONCRETE PAVEMENT CROSS-SECTION

SCALE 1 : 25

## NOTES 1 :

1. ALL DIMENSIONS ARE IN METERS UNLESS OTHERWISE INDICATED.
2. EXPANSION JOINT SHALL BE CONSTRUCTED AT THE INTERVAL OF 350 METERS. IF THE LAST INTERVAL IS LESS THAN 350 METERS, THE INTERVALS SHALL BE AVERAGED BUT BETWEEN 300 AND 350 METERS.
3. EXPANSION JOINT SHALL BE PROVIDED AT THE OUTER EDGE OF BOTH SIDES OF THE BOX CULVERT CROSSING.
4. MASTIC JOINT SEALER SHALL BE OF THE HOT POURED ELASTIC TYPE CONFORMING TO TIS. 479.
5. JOINT FILLER SHALL CONFORM TO THE AASHTO M. 213-74 OR ASTM. D1751-73 SPECIFICATION.
6. CONCRETE SHALL HAVE A MINIMUM ULTIMATE COMPRESSIVE STRENGTH OF 325 KSC. FOR 15x15x15 CM. CUBE AT 28 DAYS. AN APPROXIMATE MIX DESIGN PER CUBIC METER IS SUGGESTED AS FOLLOWS :

| | | |
|---|---|---|
| PORTLAND CEMENT TYPE 1 | 350 | KG. (MIN.) |
| SAND | 0.43 | $M^3$ |
| CRUSHED ROCK OR GRAVEL | 0.86 | $M^3$ |
| CONCRETE SLUMP | 7 | CM. (MAX.) |

7. REINFORCING STEEL SHALL CONFORM TIS. 20 GRADE SR 24 FOR ROUND BARS AND TIS. 24 GRADE SD 30 FOR DEFORMED BAR.
8. WELDED WIRE CAN BE USED IN PLACE OF BAR MESH. (SEE NOTE ②)
9. CONCRETE PAVER SHALL BE REQUIRED FOR CONCRETE POURING. IN CASE OF NECESSARY POURING CONCRETE BY MAN-POWER, CONCRETE SHALL BE POURED ONLY GAP SPACE NOT MORE THAN 30.00 METERS LONG.
10. ALL JOINTS EXCEPT EXPANSION JOINT SHALL BE MADE BY SLOT CUTTING MACHINE ONLY. FOAM SHEET, PLYWOOD, TIMBER OR MATERIAL OF THE SAME TYPE SHALL NOT BE ALLOWED.
11. TRAFFIC SHALL BE ALLOWED ONLY IF THE ULTIMATE COMPRESSIVE STRENGTH OF CONCRETE CUBE CONFORMS TO THE REQUIREMENT IN NOTE NO.6
12. ROAD CONSTRUCTION MATERIAL NOT SPECIFIED IN THIS DRAWING SHALL CONFORM TO THE STANDARD OF THE DEPARTMENT OF HIGHWAYS.
13. BROOMING CONCRETE SURFACE WITH A BROOM OF THE STANDARD TYPE SPECIFIED SHALL BE REQUIRED. THE DIRECTION OF BROOMING SHALL BE PERPENDICULAR TO THE DIRECTION OF TRAFFIC FROM ONE EDGE OR JOINT TO THE OTHER. ONE PHASE OF BROOM SURFACE SHALL PROPERLY OVERLAP WITH ANOTHER. CONCRETE BROOM SURFACE SHALL NOT BE OVER 3 MM. DEPTH. THE SURFACE SHALL BE FREE FROM PORES, HOLES OR LUMPS OF COARSE AGGREGATE OVER THE SURFACE.
14. BROOMING SURFACE CONCRETE SHALL CORRESPOND TO THE FIGURE.
15. PREPARATION OF JOINT FOR MASTIC JOINT SEALER.
    - 15.1 THE JOINT SHALL BE CLEANED WITH A BLOWER TO GET RID OF ALL KINDS OF DIRT. THE JOINT SHALL BE COMPLETELY DRY.
    - 15.2 PRIMER SHALL BE APPLIED TO THE JOINT WITH A BRUSH OR SPRAYER. THE JOINT SHALL BE LET DRY BEFORE THE POURING OF MASTIC JOINT SEALER WHICH HAS BEEN BOILED AND DISSOLVED BY MEANS OF HEAT CONDUCTIVITY TO THE SPECIFIED TEMPERATURE.
    - 15.3 JOINTS SHALL BE CUT AND MASTIC JOINT SEALER SHALL BE DROPPED AS SOON AS POSSIBLE.
    - 15.4 MASTIC JOINT SEALER SHALL BE DROPPED WITH JOINT SEALANT APPLYING MACHINE.
16. THE THICKNESS OF FLEXIBLE PAVEMENT CORRESPONDED TO THE FIGURE CONFORMING TO TYPICAL CROSS-SECTION.
17. PLASTIC SHEET USED IN CONSTRUCTION SHALL HAVE THE FOLLOWING REQUIREMENTS :
    - 17.1 THICKNESS OF 0.07 MM. WITH A TOLERANCE OF NOT MORE THAN 7 % SHALL BE REQUIRED.
    - 17.2 WIDTH SHALL NOT BE LESS THAN 1.20 M.
    - 17.3 IT SHALL BE COLOURLESS, TRANSPARENT AND WATERPROOF, FREE FROM POROUS AREA, TURN AREA AND BLISTERING AREA WHICH ARE VISIBLE BY NAKED EYE. EDGE SHALL BE STRAIGHT.
    - 17.4 CONTINUOUS LENGTH SHALL BE REQUIREMENT TO THE WIDTH OF TRAFFIC LANES. CONNECTION ALLOWED AT LONGITUDINAL JOINTS WITH NOT LESS THAN 20 CM. OVERLAPPING SHALL BE REQUIRED.
18. CONCRETE PAVEMENT CONSTRUCTION CONTROL SHALL CONFORM TO THE STANDARD DH-S 409/2530 REGARDING " REGULATIONS OF CONSTRUCTION CONTROL OF PORTLAND CEMENT CONCRETE PAVEMENT ".

## NOTES 2 :

1. BAR MESH 9 MM. AS SHOWN IN THIS DRAWING SHALL BE REPLACED BY WELDED STEEL WIRE WITH PROPERTIES CONFORMING TO STANDARD SPECIFICATION FOR WELDED STEEL WIRE FABRIC FOR CONCRETE REINFORCEMENT, AASHTO DESIGNATION M 55-75 (ASTM. DESIGNATION A 185-73). BEFORE USING WELDED STEEL WIRE FABRIC, THE SAMPLES SHALL BE SENT TO MATERIAL AND RESEARCH DIVISION DOH. FOR APPROVING.
2. MINIMUM SIZE OF WIRE TO BE USED SHALL NOT BE LESS THAN STANDARD WIRE AASHTO DESIGNATION M 32-78 (ASTM DESIGNATION A82-76) SIZE NUMBER W.12 AT NOMINAL DIAMETER OF 3.15 MM. AND NOMINAL AREA OF 0.007 $CM.^2$ WIRE TO BE USED SHALL HAVE YIELD STRENGTH OF NOT LESS THAN 65,000 $lb./INCH.^2$ (PSI.)
3. LAP SPLICES OF BAR MESH SHALL NOT BE LESS THAN 40 TIMES OF WIRE DIAMETER AND NOT LESS THAN SPACING OF CROSS WIRE + 5 CM.
4. QUANTITY OF STEEL WIRE FABRIC CALCULATED FROM NOMINAL AREA AND SPACING IN EACH DIRECTION SHALL CONFORM TO THE FOLLOWING REQUIREMENT :
    - 4.1 LONGITUDINAL STEEL (STEEL BETWEEN TRANSVERSE JOINT) SHALL HAVE THE MINIMUM AREA OF 1.511 $CM.^2/M.$
    - 4.2 TRANSVERSE STEEL :
        - 4.2.1 MINIMUM OF 0.453 $CM.^2/M.$ SHALL REQUIRED IF SPACE BETWEEN LONGITUDINAL JOINT OR FREE EDGE IS MEASURED AT 3.00 M.
        - 4.2.2 MINIMUM OF 0.491 $CM.^2/M.$ SHALL REQUIRED IF SPACE BETWEEN LONGITUDINAL JOINT OR FREE EDGE IS MEASURED AT 3.25 M.
        - 4.3.3 MINIMUM OF 0.529 $CM.^2/M.$ SHALL REQUIRED IF SPACE BETWEEN LONGITUDINAL JOINT OR FREE EDGE IS MEASURED AT 3.50 M.

    QUANTITY OF WELDED STEEL WIRE FABRIC SPECIFIED REFERS TO QUANTITY OF WELDED STEEL WIRE FABRIC MEASURED AGAINST AVERAGE SPACE LENGTH OF 1 METER FROM THE TOTAL SPACE LENGTH BETWEEN JOINT OR FREE EDGE.
5. WELDING POINTS SHALL BE ADEQUATELY STRONG AND SHALL NOT COME OFF DURING TRANSPORTATION OR PLACING. HOWEVER, THEY SHALL NOT BE SUBJECT TO REJECTION IF COMING OFF DURING CONSTRUCTION WITH WHATEVER REASON EXCEPT THAT DISCONNECTED POINTS EXCEED 1 % OF ALL WELDING POINTS. IF ROLLED OVER, DISCONNECTED POINTS SHALL NOT EXCEED 1 % OF ALL POINTS IN THE AREA OF 14 $M.^2$ DISCONNECTED POINTS FOR ONE WELDED STEEL WIRE FABRIC SHALL NOT EXCEED HALF OF ALL ALLOWABLE DISCONNECTED WELDING POINTS.
6. WELDED STEEL WIRE FABRIC SHEET SHALL BE SMOOTH NOT ROLL OR TWIST ALL DIRECTIONS, WHILE BEING PLACED DURING CONSTRUCTION.
7. CLEAR CONCRETE COVER SPACE OF WELDED STEEL WIRE FABRIC SHALL CONFORM TO BAR MESH SPECIFICATION IN THIS DRAWING.

# KINGDOM OF THAILAND
## MINISTRY OF TRANSPORT AND COMMUNICATIONS
## DEPARTMENT OF HIGHWAYS

STANDARD DRAWING

23 CM. CONCRETE PAVEMENT

| | | |
|---|---|---|
| DESIGNED : D.O.H. & CONSULTANTS | CHECKED : | DATE JULY 1994 |
| SUBMITTED : (DIRECTOR OF LOCATION & DESIGN DIVISION) | | SCALE AS SHOWN |
| APPROVED : (DIRECTOR GENERAL) | | DWG. NO. TS-401 |
| | | SHEET NO. 11 |

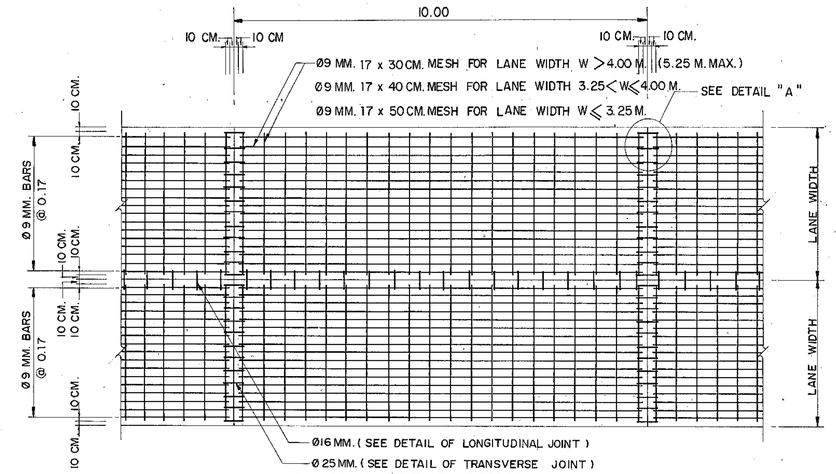


## PLAN OF REINFORCED CONCRETE PAVEMENT

SCALE 1 : 75

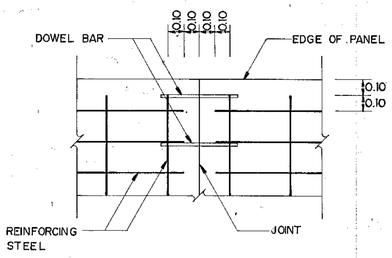


## DETAIL "A"

SCALE 1 : 20

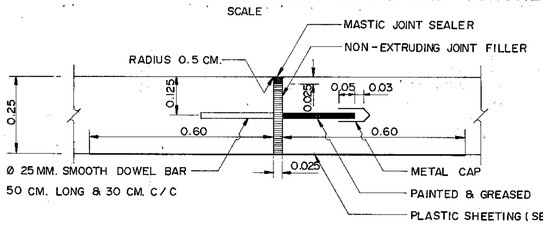


## DETAIL OF EXPANSION JOINT

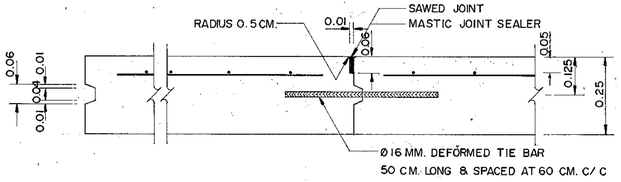


## DETAIL OF LONGITUDINAL JOINT

SCALE 1 : 10

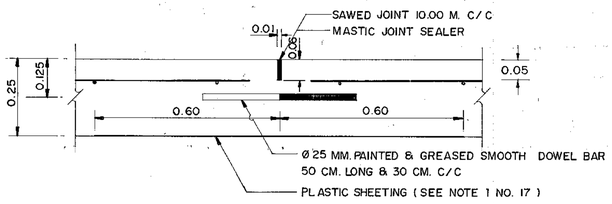


## DETAIL OF CONTRACTION JOINT

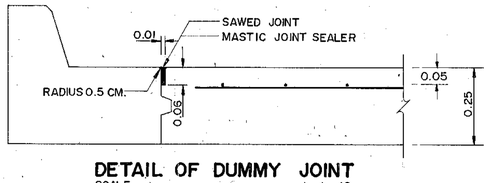


## DETAIL OF DUMMY JOINT

SCALE 1 : 10

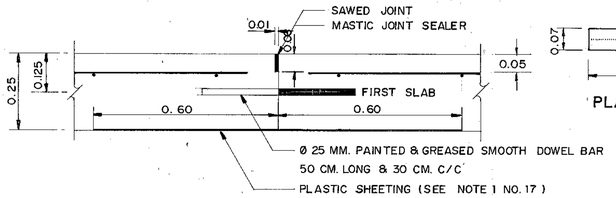


## DETAIL OF CONSTRUCTION JOINT

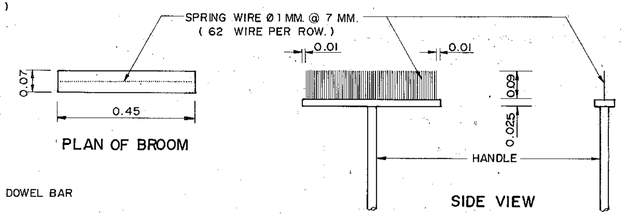


## DETAIL OF BROOM SURFACE CONCRETE PAVEMENT

SCALE 1 : 10

## DETAIL OF TRANSVERSE JOINTS

SCALE 1 : 10

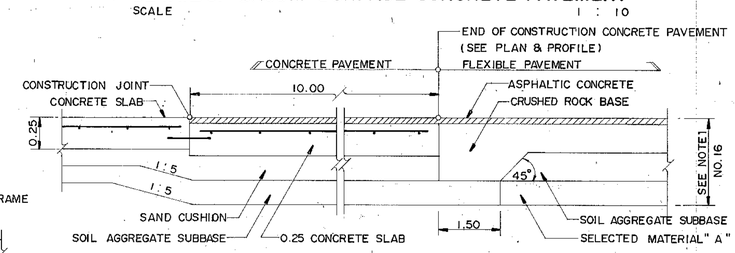


## DETAIL OF JOINT BETWEEN CONCRETE PAVEMENT AND FLEXIBLE PAVEMENT

NOT TO SCALE

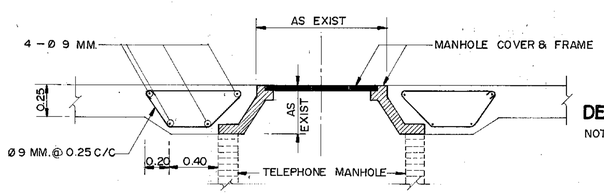


## EDGE DETAIL OF CONCRETE PAVEMENT AT TELEPHONE MANHOLE

NOT TO SCALE

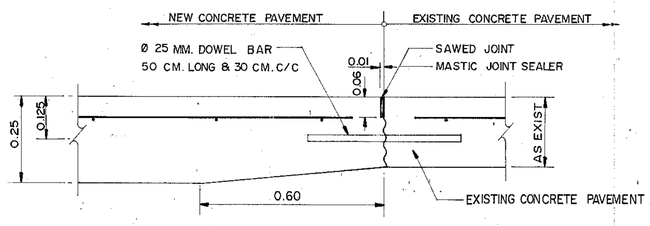


## DETAIL OF TRANSVERSE JOINT BETWEEN NEW AND EXISTING CONCRETE PAVEMENT

SCALE 1 : 10

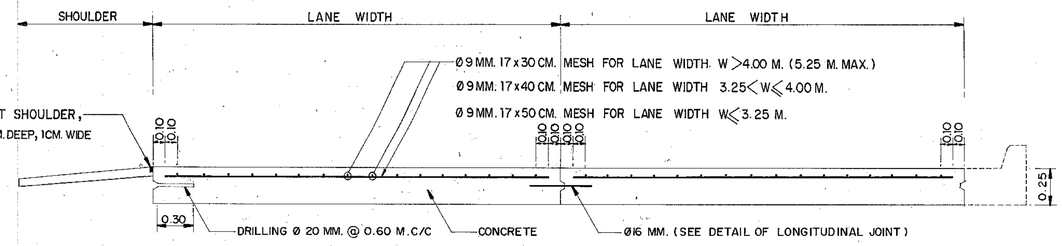


## REINFORCEMENT DETAIL OF CONCRETE PAVEMENT CROSS-SECTION

SCALE 1 : 25

## NOTES 1 :

1. ALL DIMENSIONS ARE IN METERS UNLESS OTHERWISE INDICATED.
2. EXPANSION JOINT SHALL BE CONSTRUCTED AT THE INTERVAL OF 350 METERS IF THE LAST INTERVAL IS LESS THAN 350 METERS, THE INTERVALS SHALL BE AVERAGED BUT BETWEEN 300 AND 350 METERS.
3. EXPANSION JOINT SHALL BE PROVIDED AT THE OUTER EDGE OF BOTH SIDES OF THE BOX CULVERT CROSSING.
4. MASTIC JOINT SEALER SHALL BE OF THE HOT POURED ELASTIC TYPE CONFORMING TO TIS. 479.
5. JOINT FILLER SHALL CONFORM TO THE AASHTO M. 213-74 OR ASTM. D1751-73 SPECIFICATION.
6. CONCRETE SHALL HAVE A MINIMUM ULTIMATE COMPRESSIVE STRENGTH OF 325 KSC. FOR 15x15x15 CM. CUBE AT 28 DAYS. AN APPROXIMATE MIX. DESIGN PER CUBIC METER IS SUGGESTED AS FOLLOWS :

| | | |
|---|---|---|
| PORTLAND CEMENT TYPE I | 350 | KG. (MIN.) |
| SAND | 0.43 | $M^3$ |
| CRUSHED ROCK OR GRAVEL | 0.86 | $M^3$ |
| CONCRETE SLUMP | 7 | CM. ( MAX.) |

7. REINFORCING STEEL SHALL CONFORM TIS. 20 GRADE SR 24 FOR ROUND BARS AND TIS. 24 GRADE SD 30 FOR DEFORMED BAR.
8. WELDED WIRE CAN BE USED IN PLACE OF BAR MESH. ( SEE NOTE ② )
9. CONCRETE PAVER SHALL BE REQUIRED FOR CONCRETE POURING. IN CASE OF NECESSARY POURING CONCRETE BY MAN-POWER, CONCRETE SHALL BE POURED ONLY GAP SPACE NOT MORE THAN 30.00 METERS LONG.
10. ALL JOINTS EXCEPT EXPANSION JOINT SHALL BE MADE BY SLOT CUTTING MACHINE ONLY. FOAM SHEET, PLYWOOD, TIMBER OR MATERIAL OF THE SAME TYPE SHALL NOT BE ALLOWED.
11. TRAFFIC SHALL BE ALLOWED ONLY IF THE ULTIMATE COMPRESSIVE STRENGTH OF CONCRETE CUBE CONFORMS TO THE REQUIREMENT IN NOTE NO.6
12. ROAD CONSTRUCTION MATERIAL NOT SPECIFIED IN THIS DRAWING SHALL CONFORM TO THE STANDARD OF THE DEPARTMENT OF HIGHWAYS.
13. BROOMING CONCRETE SURFACE WITH A BROOM OF THE STANDARD TYPE SPECIFIED SHALL BE REQUIRED. THE DIRECTION OF BROOMING SHALL BE PERPENDICULAR TO THE DIRECTION OF TRAFFIC FROM ONE EDGE OR JOINT TO THE OTHER. ONE PHASE OF BROOM SURFACE SHALL PROPERLY OVERLAP WITH ANOTHER. CONCRETE BROOM SURFACE SHALL NOT BE OVER 3 MM. DEPTH. THE SURFACE SHALL BE FREE FROM PORES, HOLES OR LUMPS OF COARSE AGGREGATE OVER THE SURFACE.
14. BROOMING SURFACE CONCRETE SHALL CORRESPOND TO THE FIGURE.
15. PREPARATION OF JOINT FOR MASTIC JOINT SEALER.
    - 15.1 THE JOINT SHALL BE CLEANED WITH A BLOWER TO GET RID OF ALL KINDS OF DIRT. THE JOINT SHALL BE COMPLETELY DRY.
    - 15.2 PRIMER SHALL BE APPLIED TO THE JOINT WITH A BRUSH OR SPRAYER THE JOINT SHALL BE LET DRY BEFORE THE POURING OF MASTIC JOINT SEALER WHICH HAS BEEN BOILED AND DISSOLVED BY MEANS OF HEAT CONDUCTIVITY TO THE SPECIFIED TEMPERATURE.
    - 15.3 JOINTS SHALL BE CUT AND MASTIC JOINT SEALER SHALL BE DROPPED AS SOON AS POSSIBLE.
    - 15.4 MASTIC JOINT SEALER SHALL BE DROPPED WITH JOINT SEALANT APPLYING MACHINE
16. THE THICKNESS OF FLEXIBLE PAVEMENT CORRESPONDED TO THE FIGURE CONFORMING TO TYPICAL CROSS-SECTION.
17. PLASTIC SHEET USED IN CONSTRUCTION SHALL HAVE THE FOLLOWING REQUREMENTS :
    - 17.1 THICKNESS OF 0.07 MM. WITH A TOLERANCE OF NOT MORE THAN 7 % SHALL BE REQUIRED.
    - 17.2 WIDTH SHALL NOT BE LESS THAN 1.20 M.
    - 17.3 IT SHALL BE COLOURLESS, TRANSPARENT AND WATERPROOF, FREE FROM POROUS AREA, TURN AREA AND BLISTERING AREA WHICH ARE VISIBLE BY NAKED EYE. EDGE SHALL BE STRAIGHT.
    - 17.4 CONTINUOUS LENGTH SHALL BE REQUIREMENT TO THE WIDTH OF TRAFFIC LANES. CONNECTION ALLOWED AT LONGITUDINAL JOINTS WITH NOT LESS THAN 20 CM. OVERLAPPING SHALL BE REQUIRED.
18. CONCRETE PAVEMENT CONSTRUCTION CONTROL SHALL CONFORM TO THE STANDARD DH.-S 409/2530 REGARDING "REGULATIONS OF CONSTRUCTION CONTROL OF PORTLAND CEMENT CONCRETE PAVEMENT."

## NOTES 2 :

1. BAR MESH 9 MM. AS SHOWN IN THIS DRAWING SHALL BE REPLACED BY WELDED STEEL WIRE WITH PROPERTIES CONFORMING TO STANDARD SPECIFICATION FOR WELDED STEEL WIRE FABRIC FOR CONCRETE REINFORCEMENT, AASHTO DESIGNATION M 55-75 ( ASTM. DESIGNATION A 185-73). BEFORE USING WELDED STEEL WIRE FABRIC, THE SAMPLES SHALL BE SENT TO MATERIAL AND RESEARCH DIVISION DOH. FOR APPROVING.
2. MINIMUM SIZE OF WIRE TO BE USED SHALL NOT BE LESS THAN STANDARD WIRE AASHTO DESIGNATION M 32-78 ( ASTM DESIGNATION A 82-76 ) SIZE NUMBER W. 12 AT NOMINAL DIAMETER OF 3.15 MM. AND NOMINAL AREA OF 0.007 $CM.^2$ WIRE TO BE USED SHALL HAVE YIELD STRENGTH OF NOT LESS THAN 65,000 $lb./INCH^2$ (PSI.).
3. LAP SPLICES OF BAR MESH SHALL NOT BE LESS THAN 40 TIMES OF WIRE DIAMETER AND NOT LESS THAN SPACING OF CROSS WIRE + 5 CM.
4. QUANTITY OF STEEL WIRE FABRIC CALCULATED FROM NOMINAL AREA AND SPACING IN EACH DIRECTION SHALL CONFORM TO THE FOLLOWING REQUIREMENT:
    - 4.1 LONGITUDINAL STEEL ( STEEL BETWEEN TRANSVERSE JOINT ) SHALL HAVE THE MINIMUM AREA OF 1.642 $CM.^2/M.$
    - 4.2 TRANSVERSE STEEL
        - 4.2.1 MINIMUM OF 0.492 $CM.^2/M.$ SHALL REQUIRED IF SPACE BETWEEN LONGITUDINAL JOINT OR FREE EDGE IS MEASURED AT 3.00 M.
        - 4.2.2 MINIMUM OF 0.534 $CM.^2/M.$ SHALL REQUIRED IF SPACE BETWEEN LONGITUDINAL JOINT OR FREE EDGE IS MEASURED AT 3.25 M.
        - 4.3.3 MINIMUM OF 0.575 $CM.^2/M.$ SHALL REQUIRED IF SPACE BETWEEN LONGITUDINAL JOINT OR FREE EDGE IS MEASURED AT 3.50 M.

    QUANTITY OF WELDED STEEL WIRE FABRIC SPECIFIED REFERS TO QUANTITY OF WELDED STEEL WIRE FABRIC MEASURED AGAINST AVERAGE SPACE LENGTH OF 1 METER FROM THE TOTAL SPACE LENGTH BETWEEN JOINT OR FREE EDGE.
5. WELDING POINTS SHALL BE ADEQUATELY STRONG AND SHALL NOT COME OFF DURING TRANSPORTATION OR PLACING. HOWEVER, THEY SHALL NOT BE SUBJECT TO REJECTION IF COMING OFF DURING CONSTRUCTION WITH WHATEVER REASON EXCEPT THAT DISCONNECTED POINTS EXCEED 1 % OF ALL WELDING POINTS IF ROLLED OVER, DISCONNECTED POINTS SHALL NOT EXCEED 1% OF ALL POINTS IN THE AREA OF 14 $M.^2$ DISCONNECTED POINTS FOR ONE WELDED STEEL WIRE FABRIC SHALL NOT EXCEED HALF OF ALL ALLOWABLE DISCONNECTED WELDING POINTS.
6. WELDED STEEL WIRE FABRIC SHEET SHALL BE SMOOTH NOT ROLL OR TWIST ALL DIRECTIONS, WHILE BEING PLACED DURING CONSTRUCTION.
7. CLEAR CONCRETE COVER SPACE OF WELDED STEEL WIRE FABRIC SHALL CONFORM TO BAR MESH SPECIFICATION IN THIS DRAWING.

# KINGDOM OF THAILAND
## MINISTRY OF TRANSPORT AND COMMUNICATIONS
## DEPARTMENT OF HIGHWAYS

STANDARD DRAWING

25 CM. CONCRETE PAVEMENT

| | | |
|---|---|---|
| DESIGNED : D.O.H. & CONSULTANTS | CHECKED : | DATE JULY 1994 |
| SUBMITTED : (DIRECTOR OF LOCATION & DESIGN DIVISION) | | SCALE AS SHOWN |
| APPROVED : (DIRECTOR GENERAL) | | DWG. NO. TS-402 |
| | | SHEET NO. 12 |

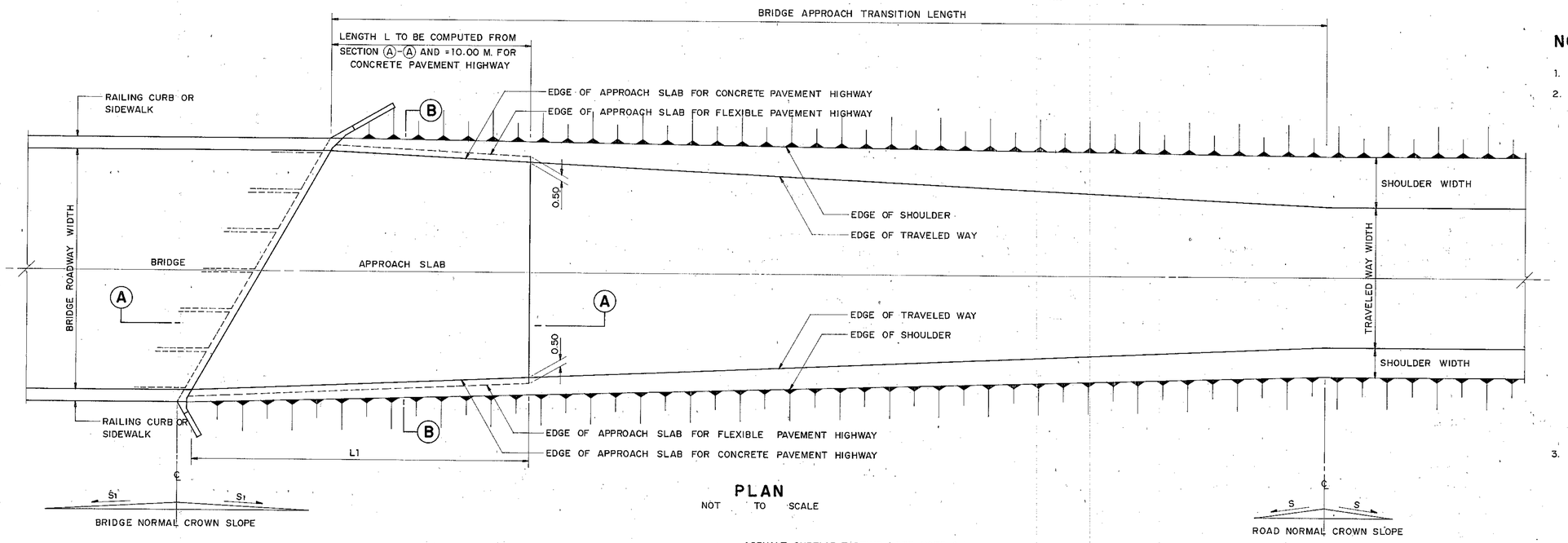


**PLAN**
NOT TO SCALE

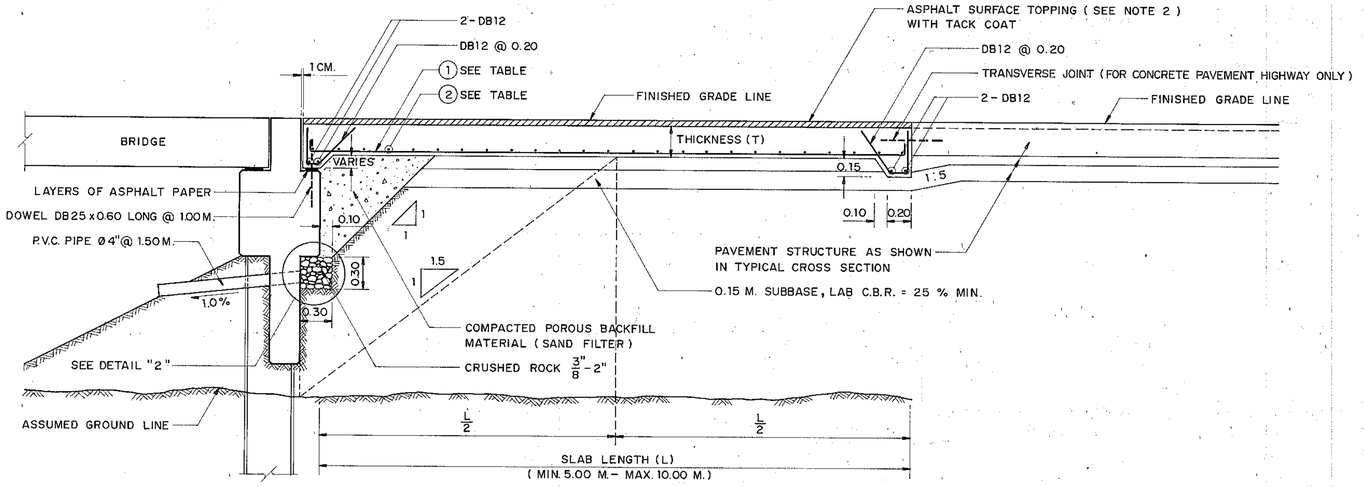


**SECTION (A)-(A)**
NOT TO SCALE

## TABLE: THICKNESS AND REINFORCEMENT

| SLAB LENGTH (L) M. | THICKNESS (T) CM. | REINFORCEMENT | |
|---|---|---|---|
| | | BAR MARK (1) | BAR MARK (2) |
| 5.00 | 20 | DB20 @ 0.20 | DB12 @ 0.20 |
| 6.00 | 22 | DB20 @ 0.15 | DB12 @ 0.20 |
| 7.00 | 24 | DB20 @ 0.20 | DB12 @ 0.20 |
| 8.00 | 26 | DB20 @ 0.15 | DB12 @ 0.15 |
| 9.00 | 28 | DB25 @ 0.20 | DB16 @ 0.20 |
| 10.00 | 30 | DB25 @ 0.15 | DB16 @ 0.15 |

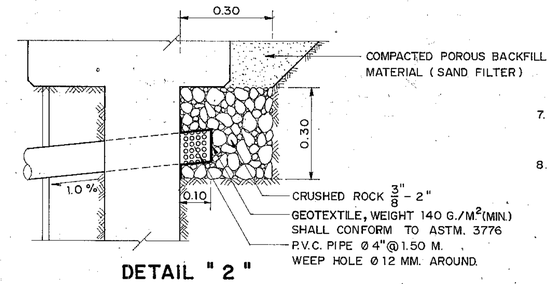


**DETAIL "2"**
NOT TO SCALE

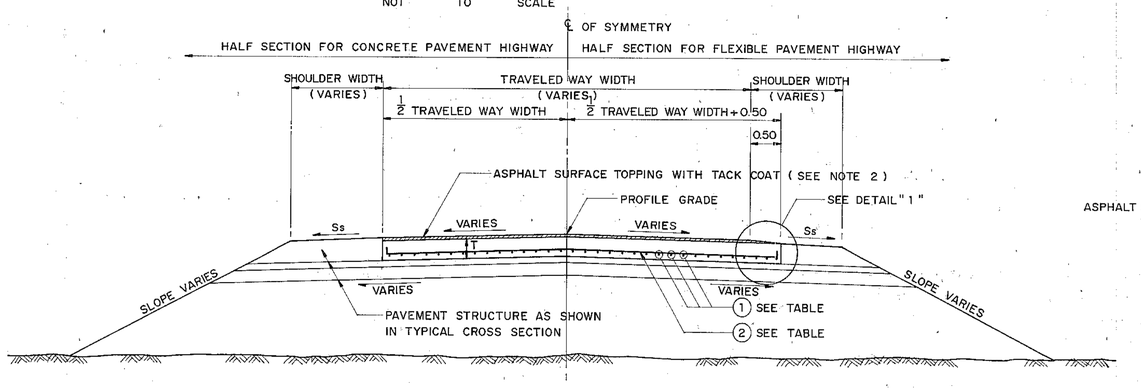


**SECTION (B)-(B)**
NOT TO SCALE

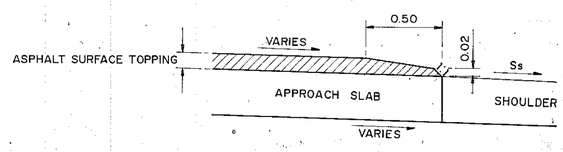


**DETAIL "1"**
NOT TO SCALE

## NOTES:

1. DIMENSIONS ARE IN METERS UNLESS OTHERWISE INDICATED.
2. TYPE AND THICKNESS OF SURFACE TOPPING ON THE APPROACH SLAB SHALL BE AS FOLLOWS.
   - 2.1 FOR CONCRETE PAVEMENT HIGHWAY ON SOFT FOUNDATION WITH ASPHALTIC CONCRETE TREATED SHOULDER, 5 CM. OF HOT MIXED ASPHALTIC CONCRETE SHALL BE USED.
   - 2.2 FOR CONCRETE PAVEMENT HIGHWAY ON SOFT FOUNDATION WITH BITUMINOUS SURFACE TREATMENT TREATED SHOULDER OR NONTREATED SHOULDER, EITHER 5 CM. OF COLD MIX ASPHALTIC CONCRETE OR 5 CM. OF HOT MIXED ASPHALTIC CONCRETE SHALL BE USED.
   - 2.3 FOR CONCRETE PAVEMENT HIGHWAY ON NORMAL SOIL FOUNDATION NO ASPHALT SURFACE TOPPING SHALL BE REQUIRED AND THE APPROACH SLAB SHALL BE RAISED TO FINISHED GRADE LINE.
   - 2.4 FOR FLEXIBLE PAVEMENT HIGHWAY WITH ASPHALTIC CONCRETE SURFACE THE SAME THICKNESS (5 CM. MIN.) OF ASPHALTIC CONCRETE TOPPING SHALL BE USED.
   - 2.5 FOR FLEXIBLE PAVEMENT HIGHWAY WITH BITUMINOUS SURFACE TREATMENT SURFACE, EITHER 5 CM. OF COLD MIX ASPHALTIC CONCRETE OR 5 CM. OF HOT MIXED ASPHALTIC CONCRETE SHALL BE USED
3. CONCRETE SHALL HAVE A MINIMUM ULTIMATE COMPRESSIVE STRENGTH OF 325 KSC. FOR 15x15x15 CM. CUBE AT 28 DAYS. AN APPROXIMATE MIX DESIGN PER CUBIC METER IS SUGGESTED AS FOLLOWS:

| | | |
|---|---|---|
| PORTLAND CEMENT TYPE 1 | 350 | KG. (MIN.) |
| SAND | 0.43 | $M.^3$ |
| CRUSHED ROCK OR GRAVEL | 0.86 | $M.^3$ |
| CONCRETE SLUMP | 7 | CM. (MAX.) |

4. NORMAL CLEAR CONCRETE COVER SHALL BE 3 CM. BUT FOR SALINE PROTECTION, CLEAR CONCRETE COVER SHALL BE 5 CM.
5. REINFORCING STEEL SHALL CONFORM TO TIS. 20 GRADE SR24 FOR ROUND BARS AND TIS. 24 GRADE SD30 FOR DEFORMED BARS.
6. POROUS BACKFILL MATERIAL SHALL BE HARD DURABLE AND CLEAN IT SHALL BE GRAVEL OR CRUSHED ROCK OR SAND AND SHALL FREE FROM ORGANIC MATERIAL, CLAY BALLS AND OTHER DELETERIOUS SUBSTANCES LATERITE OR CONCRETIONARY MATERIAL SHALL NOT BE USED.
   SAND USED FOR POROUS BACKFILL MATERIAL SHALL CONFORM TO THE FOLLOWING GRADING REQUIREMENTS.

| SIEVE DESIGNATION | PERCENT BY WEIGHT PASSING |
|---|---|
| 3/8" | 100 |
| NO. 4 | 95 – 100 |
| NO. 16 | 45 – 80 |
| NO. 50 | 10 – 30 |
| NO. 100 | 2 – 10 |

7. THE COST OF APPROACH SLAB SHALL INCLUDE THE COST OF POROUS MATERIAL.
8. S1 = BRIDGE NORMAL CROWN SLOPE
   S = ROAD NORMAL CROWN SLOPE
   Ss = SHOULDER CROSS SLOPE

# KINGDOM OF THAILAND
## MINISTRY OF TRANSPORT AND COMMUNICATIONS
## DEPARTMENT OF HIGHWAYS

STANDARD DRAWING

**BRIDGE APPROACH SLAB AND POROUS BACKFILL MATERIALS**

| | | |
|---|---|---|
| DESIGNED: D.O.H. & CONSULTANTS | CHECKED: | DATE JULY 1994 |
| SUBMITTED: (DIRECTOR OF LOCATION & DESIGN DIVISION) | | SCALE NONE |
| APPROVED: (DIRECTOR GENERAL) | | DWG. NO. TS-403 |
| | | SHEET NO. 13 |

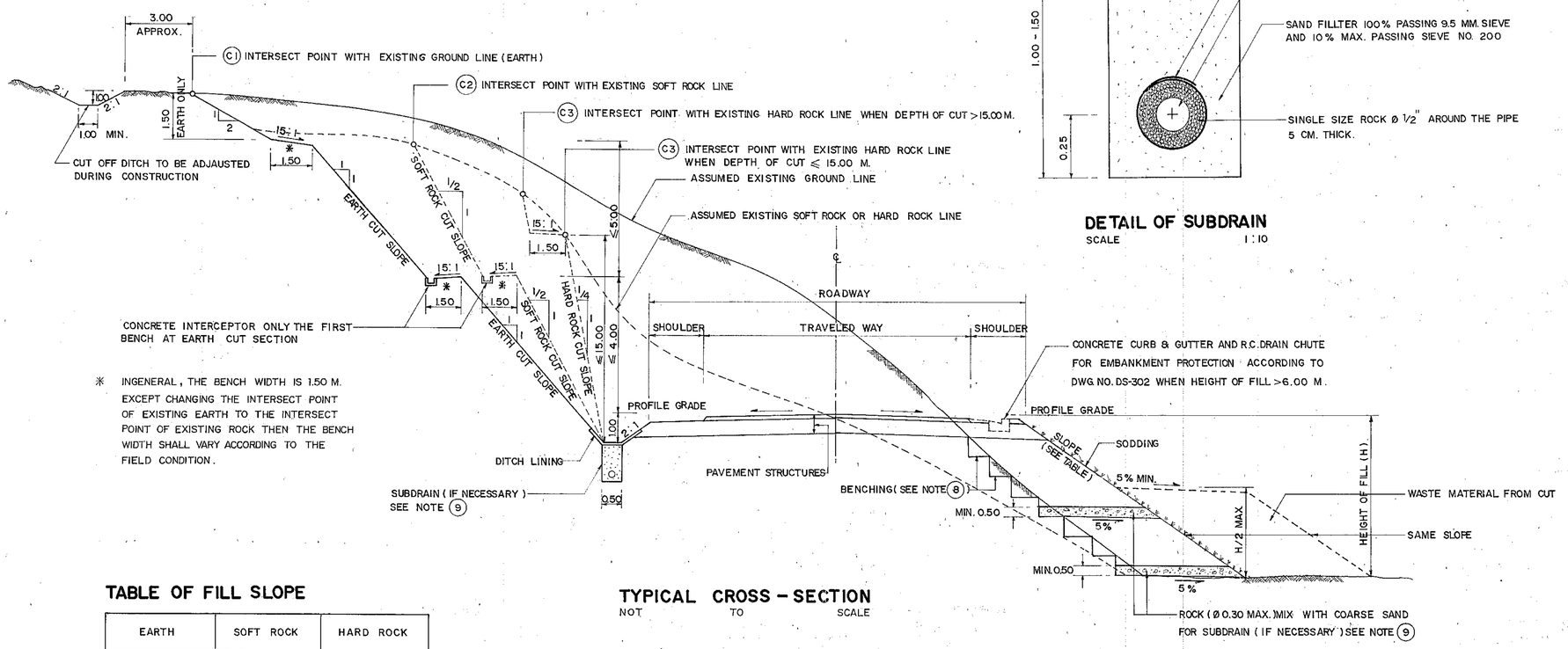


## TYPICAL CROSS - SECTION
NOT TO SCALE

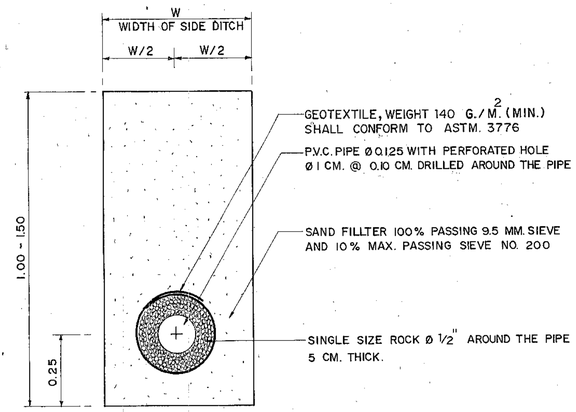


## DETAIL OF SUBDRAIN
SCALE 1 : 10

## TABLE OF FILL SLOPE

| EARTH | SOFT ROCK | HARD ROCK |
|---|---|---|
| 1.5 : 1 | 1 : 1 | 1 : 1 |

## NOTES :

1. DIMENSIONS ARE IN METERS UNLESS OTHERWISE INDICATED.
2. THE CROSS-SECTION OF CUT AND FILL HEREIN SHALL BE APPLIED ONLY WHEN THE DEPTH OF CUT IS OVER 5.00 METRES FROM THE BOTTOM OF THE SIDE DITCH, AND SIDE HILL FILL ALSO.
3. PAVEMENT STRUCTURES AND OTHER DETAILS WHICH ARE NOT SPECIFIED IN THIS DRAWING SHALL BE REFERED TO THAT IN THE TYPICAL CROSS-SECTION DRAWING.
4. THE PROCESS OF RIPPING AND EXPOSING THE CUT MATERIALS SHALL BE MEASURED AS FOLLOWS :
   - 4.1 IN CASE OF SOIL WITHOUT ANY ROCKS APPEAR ABOVE THE GROUND SURFACE, THE POINT (C1) IN THE DRAWING WILL BE THE INTERSECTING POINT BETWEEN THE SLOPE OF CUT AND THE EXISTING GROUND LINE SO THE EXCAVATION SHALL START FROM THIS POINT.
   - 4.2 AFTER THE EXCAVATION AS INDICATED IN SECTION 4.1 FOR A DISTANCE AND THE SOFT ROCK OR HARD ROCK WAS FOUND, THEN THE TOE SLOPE SHALL BE CHANGED FROM POINT (C1) TO POINT (C2) OR (C3) AS INDICATED ON THE DRAWING THE STEP WIDTH OF BENCHING SHALL BE DIRECTED BY THE ENGINEER THE STABILITY OF THE CUT SLOPE SHOULD BE CAREFULLY CONSIDERED AND THE UNSUITABLE TOP SOIL MATERIALS SHALL BE REMOVED.
   - 4.3 THE CLASSIFICATION OF SOIL, SOFT ROCK OR HARD ROCK SHALL BE CONSIDERED IN ACCORDANCE WITH THE SPECIFICATION FOR HIGHWAY CONSTRUCTIONS BY THE DEPARTMENT OF HIGHWAYS, AND ALSO SHALL BE DIRECTED BY THE ENGINEER.
   - 44 THE QUANTITIES SHALL BE CALCULATED FROM THE CROSS - SECTION, SEPARATED FOR SOIL, SOFT ROCK OR HARD ROCK AT 6.25 M. INTERVAL.
     IN CASE OF MIXED MATERIALS FOR EACH CROSS - SECTION, THEN THE NEGOTIATION BETWEEN THE OWNER AND THE CONTRACTOR SHOULD BE ARRANGED.
5. CONCRETE INTERCEPTION ON CUT SLOPE SHALL BE CONSTRUCTURED ON SILTY SAND, GRAVAL LATERITE, SOFT ROCK OR SHALE, BUT BE NOT NECESSARY ON SHALE SOLID ROCK AREA.
6. THE LONGITUDINAL SLOPE OF CONCRETE INTERCEPTOR IN NOTE 5 SHALL NOT BE LESS THAN 0.3 PERCENT.
7. EACH SECTION OF CONCRETE INTERCEPTOR SHALL BE 0.50 M. LONG FOR PRECAST CONCRETE AND SHALL NOT BE GREATER THAN 15.00 M. FOR CAST-IN-PLACE CONCRETE. ALL JOINT SPACES SHALL BE 0.5 CM. WIDE WITH MORTARED FLUSH ON ( THE RATIO OF PORTLAND CEMENT : SAND IS 1:2 BY VOLUME )
8. BENCHING SHALL BE REQUIRED ON EXISTING GROUND SLOPE OR EXISTING ROADBED IN THE PORTION OF EMBANKMENT. THE NUMBER OF STEPS FOR BENCHING DEPENDS UPON THE HEIGHT OF SLOPE THE HEIGHT OF EACH STEP SHALL BE DIRECTED BY THE ENGINEER, AND THE WIDTH SHALL BE PERMITED FOR COMPACTED EQUIPMENT, AND THE DENSITY OF THE COMPACTED MATERIAL SHALL NOT BE LESS THAN 95 PERCENT OF STANDARD PROCTOR.
9. BEFORE CONSTRUCTING PAVEMENT STRUCTURES, IF GROUND WATER SEEPAGE APPEARS ON CUT SLOPE OR SIDE HILL FILL AND SEEMS TO DAMAGE THE ROADWAY, THE SUBDRAIN AS SHOWN ON THE DRAWING SHALL BE APPLIED.
10. CONCRETE SHALL HAVE A MINIMUM ULTIMATE COMPRESSIVE STRENGTH OF 180 KSC. FOR 15x15x15 CM. CUBE AT 28 DAYS. AN APPROXIMATE MIX DESIGN PER CUBIC METER IS SUGGESTED AS FOLLOWS :

| | |
|---|---|
| PORTLAND CEMENT TYPE 1 | 320 KG. (MIN.) |
| SAND | 0.43 $M^3$ |
| CRUSHED ROCK OR GRAVEL | 0.86 $M^3$ |
| CONCRETE SLUMP | 10 CM. (MAX.) |

11. THE REINFORCING STEEL SHALL COMFORM TO TIS. 20 GRADE SR 24 WITH THE MINIMUM CLEAR CONCRETE COVER OF 2.5 CM.
12. P.V.C. PIPE SHALL BE D-PLAST RIGID TYPE CLASS 8.5 (PLAIN ENDS) CONFORMING TO TIS. 17

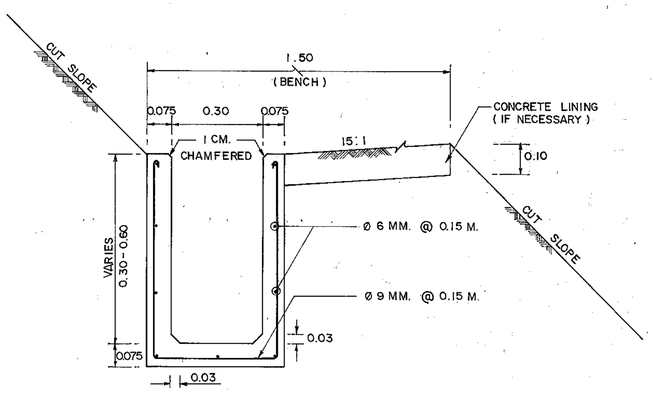


## DETAIL OF CONCRETE INTERCEPTOR
SCALE 1 : 10

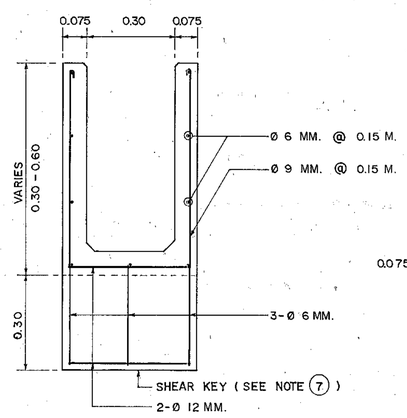


## CROSS - SECTION OF CONCRETE INTERCEPTOR AT SHEAR KEY
SCALE 1 : 10

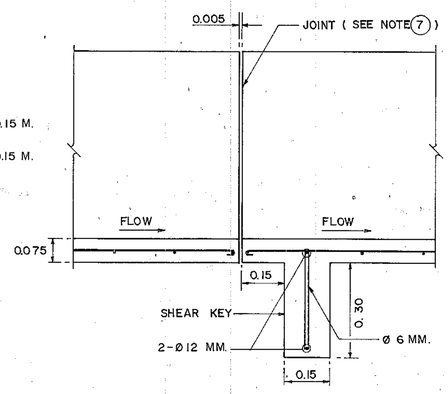


## PROFILE SECTION OF CONCRETE INTERCEPTOR
SCALE 1 : 10

# KINGDOM OF THAILAND
MINISTRY OF TRANSPORT AND COMMUNICATIONS
DEPARTMENT OF HIGHWAYS

STANDARD DRAWING

CROSS - SECTION FOR DEEP CUT AND HIGH FILL

| | | |
|---|---|---|
| DESIGNED: D.O.H. & CONSULTANTS | CHECKED: | DATE JULY 1994 |
| SUBMITTED: (DIRECTOR OF LOCATION & DESIGN DIVISION) | | SCALE AS SHOWN |
| APPROVED: (DIRECTOR GENERAL) | | DWG. NO. TS-501 |
| | | SHEET NO. 14 |

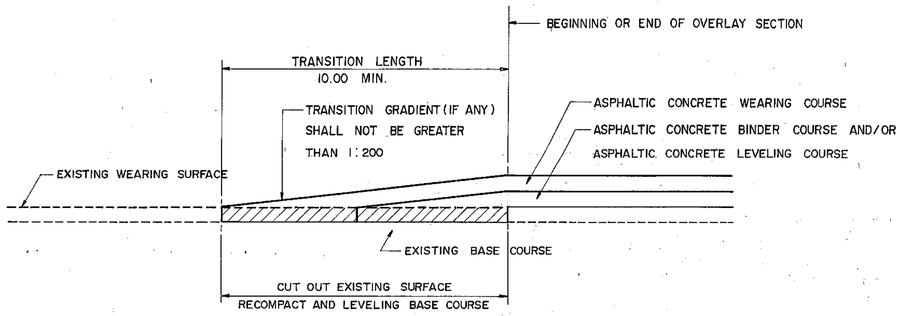


## TRANSITION OF OVERLAY SECTION TO EXISTING ROAD

NOT TO SCALE

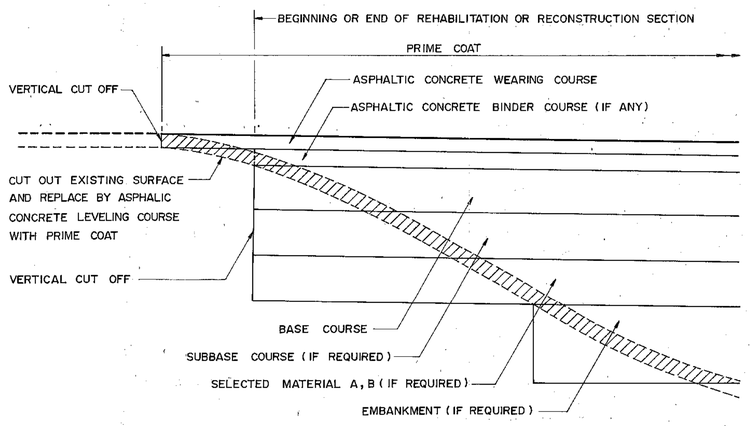


## TRANSITION OF REHABILITATION OR RECONSTRUCTION TO EXISTING ROAD

NOT TO SCALE

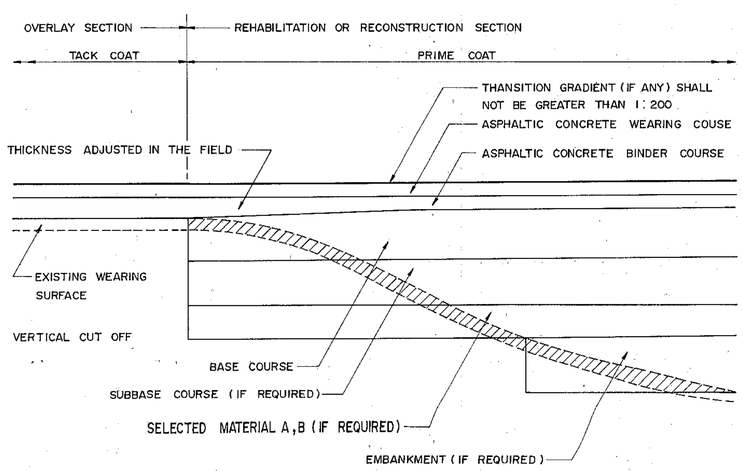


## TRANSITION OF OVERLAY SECTION TO REHABILITATION OR RECONSTRUCTION SECTION

NOT TO SCALE

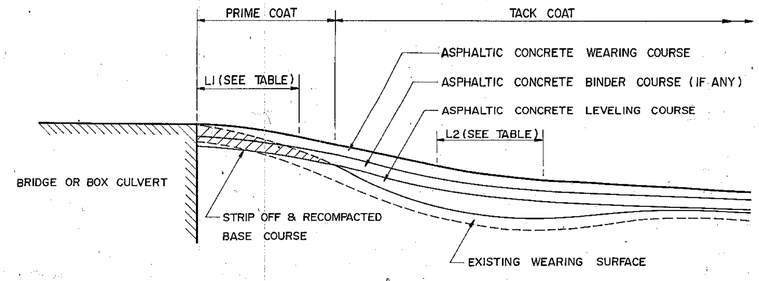


## CASE 1 : PAVE TO EXISTING STRUCTURE

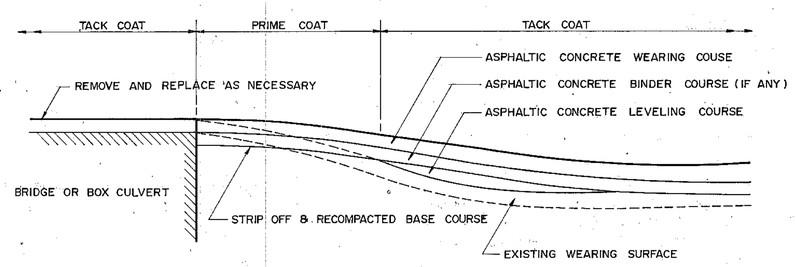


## CASE 2 : PAVE OVER EXISTING STRUCTURE

## OVERLAY AT BRIDGE / BOX CULVERT APPROACH

NOT TO SCALE

### TABLE

| SUGGESTED MINIMUM LENGTH OF VERTICAL CURVE AT BRIDGE APPROACH | | |
|---|---|---|
| ALGEBRAIC DIFFERRENT OF PROPOSED GRADE | LENGTH OF CREST CURVE, L1 M. | LENGTH OF SAG CURVE, L2 M. |
| 0 - 2 % | 10 | 20 |
| 2 - 4 % | 20 | 35 |
| 4 - 6 % | 30 | 50 |
| 6 - 8 % | 40 | 65 |

## NOTES :

1. THE DETAILS AT LEFT ARE NOT TO SCALE AND ARE EXAGGERATED IN ORDER TO SHOW DETAIL THE ENGINEER WILL MAKE NECESSARY.
2. PRIME COAT SHALL BE APPLIED TO A COMPACTED BASE AFTER STRIPPING OFF OF THE EXISTING SURFACE APPLICATION RATE SHALL BE KEPT TO A MINIMUM DEPENDING ON THE POROSITY AND TEXTURE OF THE EXPOSED BASE COURSE.
3. TACK COAT SHALL BE APPLIED TO EACH LAYER OF ASPHALTIC CONCRETE
4. WHERE POSSIBLE, ASPHALTIC LEVELING COURSE SHALL BE PLACED IN LAYERS BY AN ASPHATIC FINISHER COMPACTED IN THE GENERAL SPECIFICATION.

**KINGDOM OF THAILAND**
**MINISTRY OF TRANSPORT AND COMMUNICATIONS**
**DEPARTMENT OF HIGHWAYS**

STANDARD DRAWING

PAVEMENT TRANSITION DETAILS

| | | |
|---|---|---|
| DESIGNED : D.O.H. & CONSULTANTS | CHECKED : | DATE JULY 1994 |
| SUBMITTED : (DIRECTOR OF LOCATION & DESIGN DIVISION) | | SCALE NONE |
| APPROVED : (DIRECTOR GENERAL) | | DWG. NO. TS-601 |
| | | SHEET NO. 15 |

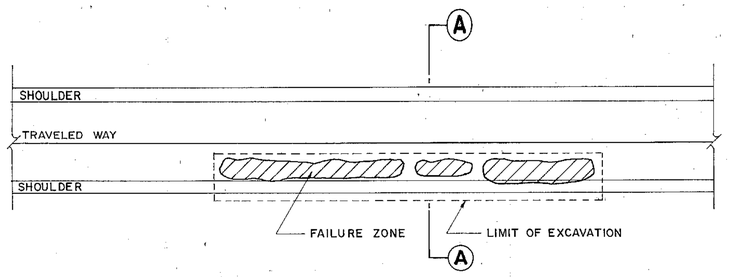


PLAN

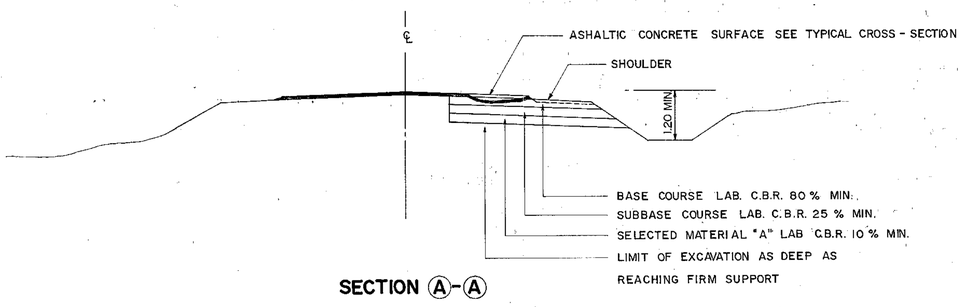


SECTION A-A

## PAVEMENT REPAIR FOR FAILURE SETTLEMENT OR UPHEAVAL ZONE

NOT TO SCALE

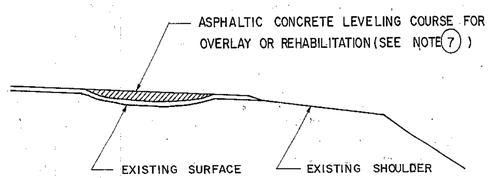


LONGITUDINAL DEPRESSION

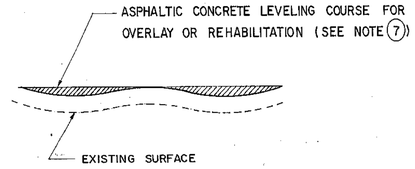


CORRUGATION

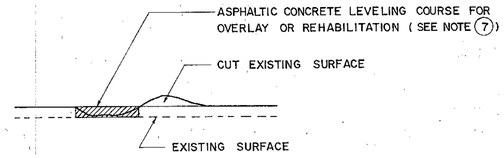


SHOVING

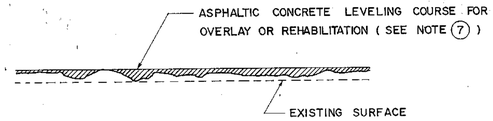


RAVELING

## PAVEMENT PATCHING FOR DEPRESSION CORRUGATION, SHOVING AND RAVELING

NOT TO SCALE

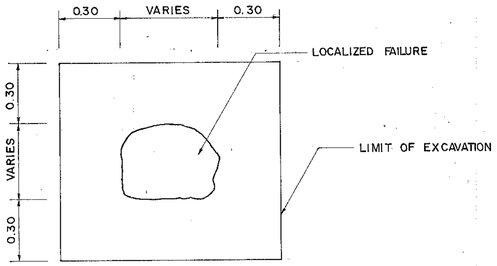


PLAN

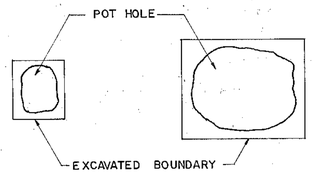


PLAN

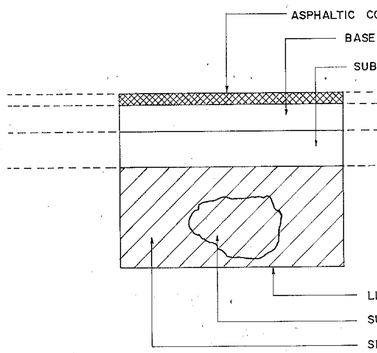


SECTION LOCALIZED FAILURE

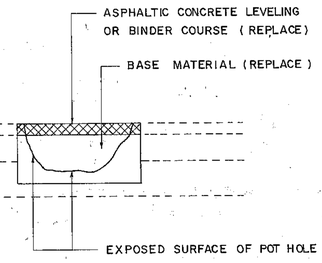


SECTION POT HOLE

## PAVEMENT REPAIR FOR LOCALIZED FAILURE AND POT HOLE

NOT TO SCALE

## REPAIR OF CRACKS

1. ALLIGATOR CRACKS ARE NORMALLY CAUSED BY EXCESSIVE DEFLECTION OF THE SURFACE OVER UNSTABLE LOWER COURSES OF THE PAVEMENT ALLIGATOR CRACKS SHOULD THEN BE TREATED AND REPAIRED AS LOCALIZED FAILURE
2. REFLECTION CRACKS AND SHRINKAGE CRACKS SHALL SEALED BY EITHER TACK COAT OF A HIGHER APPLICATION RATES OR ASPHALTIC SLURRY SEAL AS DIRECTED BY THE ENGINEER.
3. SLIPPAGE CRACKS ARE CAUSED BY THE LACK OF A GOOD BOND BETWEEN THE SURFACE LAYER AND THE COURSE BENEATH REMOVE THE SLIPPING AREA, CLEAN THE SURFACE OF THE EXPOSED UNDERLYING LAYER AND APPLY A SUITABLE APPLICATION RATE OF TACK COAT AS DIRECTED BY THE ENGINEER.

## NOTES :

1. FOR CONTINUOUS FAILURE SECTIONS AND LOCALIZED FAILURE, FAILURE ZONES SHALL BE EXCAVATED TO THE UNDETERIORATED LAYER UNSUITABLE MATERIAL OR SOFT SPOT SHALL BE REMOVED TO THE SATISFACTION OF THE ENGINEER.
2. A SOFT SPOT IN AN EXISTING ROAD CAN BE VISUALLY DETERMINED BY THE MOVEMENT OF THE PAVEMENT UNDER PROOF ROLLING.
3. THE RECONSTRUCTION OF PAVEMENT STRUCTURE SHALL BE DONE LAYER BY LAYER TO THE REQUIRED THICKNESS SUITABLE MATERIALS MAY BE REUSED. ALL MATERIALS SHALL BE IN ACCORDANCE WITH THE DRAWING AND THE SPECIFICATION.
4. BENCHING INTO SIDE SLOPES SHALL BE DONE WITH CARE IN ORDER TO PREVENT THE EXISTING PAVEMENT FROM COLLAPSING UNDER TRAFFIC CONDITIONS.
5. THE NEED FOR SIDE DITCHES FOR PAVEMENT SUBSURFACE DRAINAGE SHALL BE VERIFIED BY THE ENGINEER AND EXCAVATION SHALL COMMENCE AS EARLY IN THE CONTRACT AS POSSIBLE TO REDUCE THE EXCESS WATER CONTENT FROM THE ROAD STRUCTURE.
6. FOR POT HOLES, THE HOLE SHALL BE SQUARED, DRESSED AND DATCHED AS SHOWN USING GOOD FIELD PRACTICE AND IN ACCORDANCE WITH THE SPECIFICATIONS.
7. FOR LONGITUDINAL DEPRESSION, CORRUGATION, SHOVING AND PITTING THE EXISTING SURFACE SHALL BE THOROUGHLY, CLEANED AND LOOSE GRAVEL REMOVED HUMPS IN THE EXISTING SURFACE SHALL BE CUT TO THE ADJACENT SURFACE LEVEL PRIOR TO OVERLAY OR REHABILITATION.
8. TACK COAT APPLIED TO PAVEMENT CRACKS OR PITTING AREA SHALL BE ADJUSTED HIGHER APPLICATION RATES IF DIRECTED BY THE ENGINEER.
9. BLEEDING SURFACE SHALL BE REMOVED AS APPLICABLE OR SEALED WITH ASPHALTIC CONCRETE LEVELING OR BINDER COURSE THE ASPHALT CONTENT SHALL BE KEPT AT A SUITABLE RATE AS APPROVED BY PROJECT ENGINEER.
10. TRAFFIC SIGN, BARRICADES, LIGHTS, ETC. SHALL BE PROVIDED AT EACH UNCOMPLETED REPAIR SECTIONS FOR SAFTY MEASURES.

**KINGDOM OF THAILAND**
**MINISTRY OF TRANSPORT AND COMMUNICATIONS**
**DEPARTMENT OF HIGHWAYS**

STANDARD DRAWING

TYPICAL SURFACE OVERLAY SECTION

| | | |
|---|---|---|
| DESIGNED : D.O.H. & CONSULTANTS | CHECKED : | DATE JULY 1994 |
| SUBMITTED : (DIRECTOR OF LOCATION & DESIGN DIVISION) | | SCALE NONE |
| APPROVED : (DIRECTOR GENERAL) | | DWG. NO. TS-602 |
| | | SHEET NO. 16 |

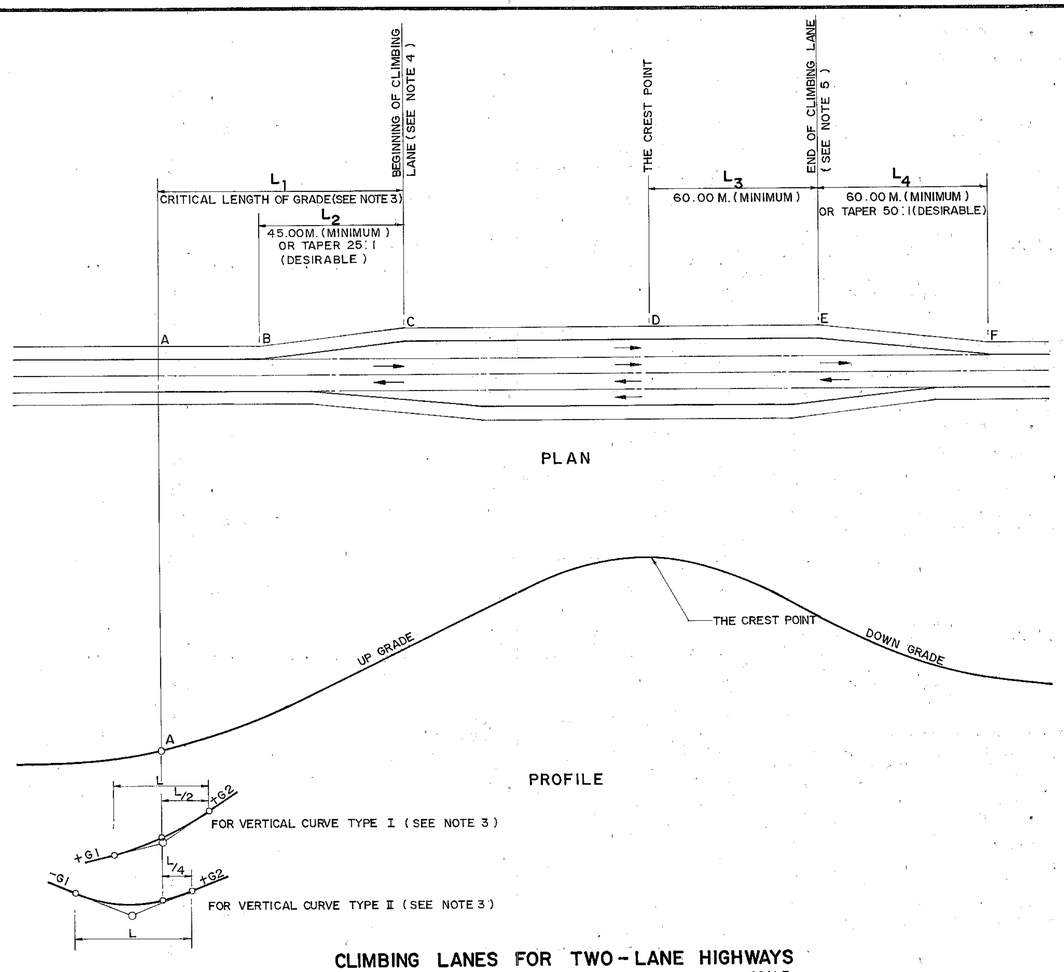


## CLIMBING LANES FOR TWO-LANE HIGHWAYS

NOT TO SCALE

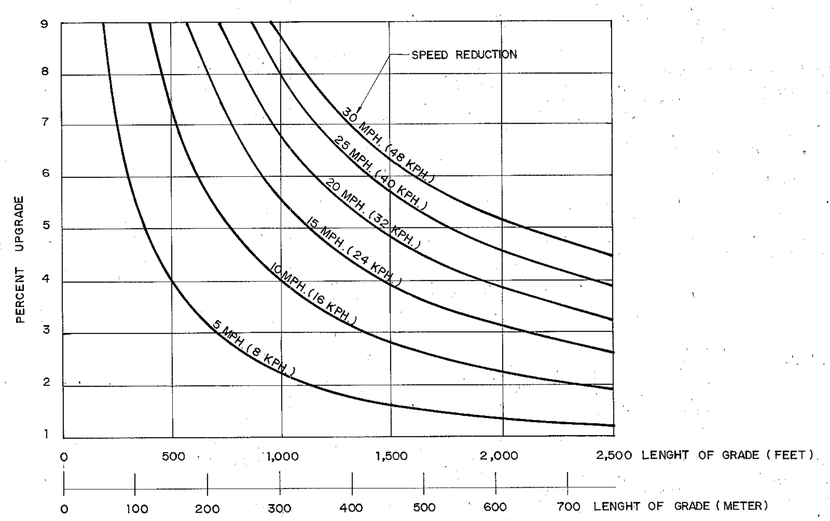


CRITICAL LENGTHS OF GRADE FOR DESIGN, ASSUMED TYPICAL HEAVY TRUCK OF 300 lb/HP, ENTERING SPEED = 55 MPH.

## CLIMBING LANES FOR TWO-LANE HIGHWAYS

1. CONDITION AND CRITERIA

   THE FOLLOWING THREE CONDITIONS AND CRITERIA, REFLECTING ECONOMIC CONSIDERATION, SHOULD BE SATISFIED TO JUSTIFY A CLIMBING LANE :

   1.1 UPGRADE TRAFFIC FLOW RATE IN EXCESS OF 200 VEHICLES PER HOUR.

   1.2 UPGRADE TRUCK FLOW RATE IN EXCESS OF 20 VEHICLES PER HOUR.

   1.3 ONE OF THE FOLLOWING CONDITIONS EXISTS :

   - A 10 MPH. (16 KPH.) OR GREATER SPEED REDUCTION IS EXPECTED FOR A TYPICAL HEAVY TRUCK.
   - LEVEL-OF-SERVICE E OR F EXISTS ON THE GRADE.
   - A REDUCTION OF TWO OR MORE LEVELS-OF-SERVICE IS EXPERIENCED WHEN MOVING FROM THE APPROACH SEGMENT TO THE GRADE.

2. THESE GENERAL GUIDES FOR THE CONSIDERATION OF CLIMBING LANES ON GRADES WOULD APPLY ONLY TO CLIMBING LANES ON TWO-LANE HIGHWAYS AND SHOULD NOT BE USED IN CONJUNCTION WITH CONSIDERATION OF CLIMBING LANES ON MULTILANE HIGHWAYS.

3. THE CRITICAL LENGTH OF GRADE IN FIGURE IS DERIVED AS THE LENGTH OF TANGENT GRADE. WHERE A VERTICAL IS PART OF A CRITICAL LENGTH OF GRADE, AN APPROXIMATE EQUIVALENT TANGENT GRADE LENGTH MUST BE USED. WHERE THE CONDITION INVOLVES VERTICAL CURVE TYPE I AND THE ALGEBRAIC DIFFERENCE IN GRADES IS NOT TOO GREAT, THE MEASUREMENT OF CRITICAL LENGTH OF GRADE MAY BE MADE BETWEEN THE POINT OF VERTICAL INTERSECTION (PVI.). WHERE VERTICAL CURVE OF TYPE II IS INVOLVED, PARTICULARLY WHERE THE ALGEBRAIC DIFFERENCE IN GRADE IS APPRECIABLE, ABOUT ONE-QUARTER OF THE VERTICAL CURVE LENGTH MAY BE CONSIDERED AS PART OF THE GRADE UNDER CONSIDERATION.

4. THE BEGINNING POINT OF CLIMBING LANE IS THE POINT WHERE A 10 MPH. (16 KPH.) DECREASE IN TRUCK SPEED BELOW THE OPERATING SPEED, AS "CRITICAL LENGTHS OF GRADE".

5. THE END POINT OF CLIMBING LANE IS THE POINT WHERE THE TRUCK CAN RETURN TO THE NORMAL LANE WITHOUT UNDUE HAZARD IN PARTICULAR, WHERE THE SIGHT DISTANCE BECOMES SUFFICIENT TO PERMIT PASSING WITH SAFETY WHEN THERE IS NO ONCOMING TRAFFIC OR, PREFERABLY, AT LEAST 60.00 M. BEYOND THE CREST POINT.

## CLIMBING LANES ON MULTILANE HIGHWAYS

1. CONDITION AND CRITERIA

   1.1 IF THE CRITICAL LENGTH OF GRADE, THE LENGTH OF A PARTICULAR UPGRADE WHICH REDUCES THE OPERATING SPEED OF TRUCKS 10 MPH. (16 KPH.) BELOW THE OPERATING SPEED OF THE REMAINING TRAFFIC, IS LESS THAN THE LENGTH OF GRADE BEING STUDIED A CLIMBING LANE IS WARRANTED.

   1.2 IF THE FLOW RATE ON THE GRADE DETERMINED BY DIVIDING THE UPGRADE DDHV (THE DIRECTIONAL DISTRIBUTION OF TRAFFIC ON MULTILANE FACILITIES DURING THE DESIGN HOUR) BY THE PEAK HOUR FACTOR (PHF) EXCEEDS THAT OF THE NEXT POORER LEVEL-OF-SERVICE, A CLIMBING LANE IS WARRANTED.

   GENERALLY, CLIMBING LANES SHOULD NOT BE CONSIDERED UNLESS THE UPGRADE DIRECTIONAL TRAFFIC VOLUME IS EQUAL TO OR GREATER THAN THE LEVEL-OF-SERVICE D SERVICE VOLUME FOR TWO OF THE LANES OF A FOUR-LANE HIGHWAY WITH THE NORMAL PERCENTAGE OF TRUCKS.

2. IN MOST CASES WHEN THE SERVICE VOLUME, INCLUDING TRUCKS, IS GREATER THAN 1,700 VPH. AND THE LENGTH OF THE GRADE AND THE PERCENTAGE OF TRUCKS ARE SUFFICIENT TO CONSIDER CLIMBING LANES, THE VOLUME IN TERMS OF EQUIVALENT PASSENGER CARS IS LIKELY TO APPROACH OR EVEN EXCEED THE CAPACITY. AN INCREASE IN THE NUMBER OF LANES THROUGHOUT THE HIGHWAY SECTION WOULD REPRESENT A BETTER INVESTMENT THAN THE PROVISION OF CLIMBING LANES.

3. A CLIMBING LANE IS ALSO GENERALLY NOT WARRANTED ON FOUR-LANE HIGHWAYS FOR A DIRECTIONAL SERVICE VOLUME BELOW 1,000 VPH. REGARDLESS OF THE PERCENTAGE OF TRUCKS.

4. WHEN THE ANALYSIS INDICATES THAT A CLIMBING LANE MAY IMPROVE OPERATIONS OR MAINTAIN THE LEVEL-OF-SERVICE ON THE SECTION WITH A GRADE AN ADDITIONAL CHECK MUST BE MADE TO DETERMINE IF THE NUMBER OF LANES REQUIRED ON THE GRADE ARE SUFFICIENT EVEN WITH A CLIMBING LANE.

5. THE PRINCIPLES FOR CROSS SLOPES, FOR LOCATING TERMINAL POINTS, AND FOR DESIGNING TERMINAL AREAS OR TAPERS FOR CLIMBING LANES ON TWO-LANE HIGHWAYS ARE EQUALLY APPLICABLE TO CLIMBING LANES ON MULTILANE FACILITIES. THE PRIME FACTOR BEING THAT OF DETERMINING THE LOCATION OF THE UPHILL TERMINUS OF THE CLIMBING LANE AT THE POINT WHERE A SATISFACTORY SPEED IS ATTAINED BY TRUCKS, PREFERABLY ABOUT 10 MPH. (16 KPH.) BELOW THE OPERATING SPEED OF THE HIGHWAY. PASSING SIGHT DISTANCE NEED NOT BE CONSIDERED.

| | | |
|---|---|---|
| **KINGDOM OF THAILAND**<br>MINISTRY OF TRANSPORT AND COMMUNICATIONS<br>DEPARTMENT OF HIGHWAYS | | |
| STANDARD DRAWING<br>TYPICAL CLIMBING LANE SECTION | | |
| DESIGNED: D.O.H. & CONSULTANTS | CHECKED: | DATE JULY 1994 |
| SUBMITTED: (DIRECTOR OF LOCATION & DESIGN DIVISION) | | SCALE NONE |
| | | DWG. NO. TS-701 |
| APPROVED: FOR (DIRECTOR GENERAL) | | SHEET NO. 17 |

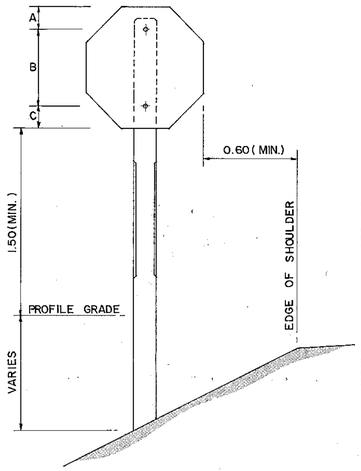


**REGULATORY SIGN**

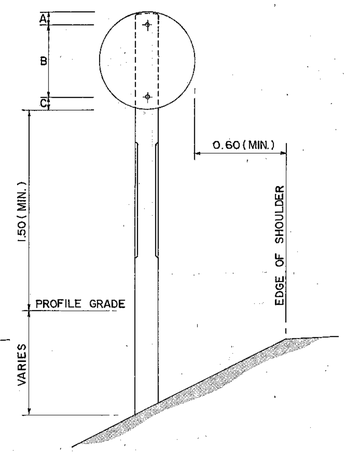


**REGULATORY SIGN**

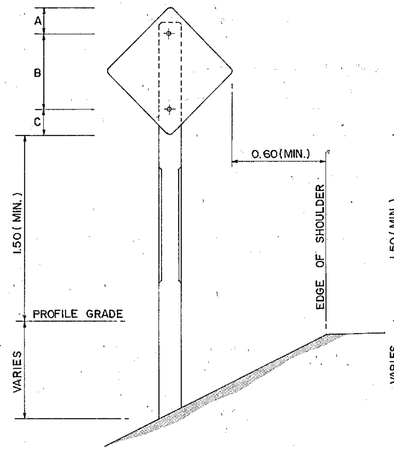


**WARNING SIGN**

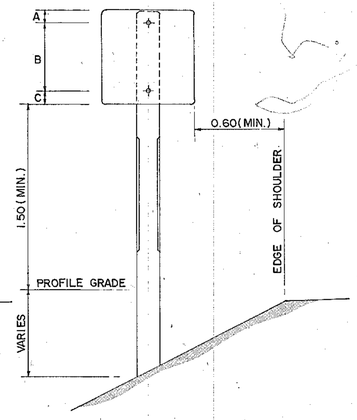


**ROUTE MARKER**

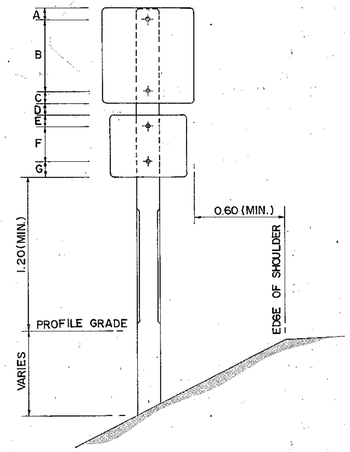


**ROUTE TURN ASSEMBLIES TYPE I OR DIRECTIONAL ASSEMBLIES**

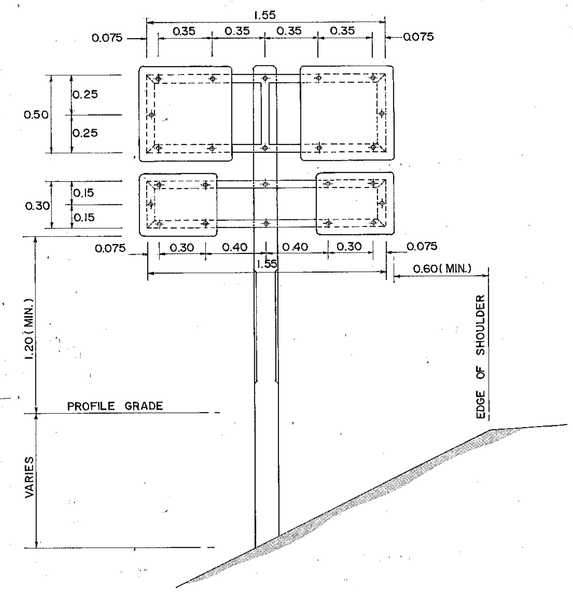


**ROUTE TURN ASSEMBLIES TYPE II**

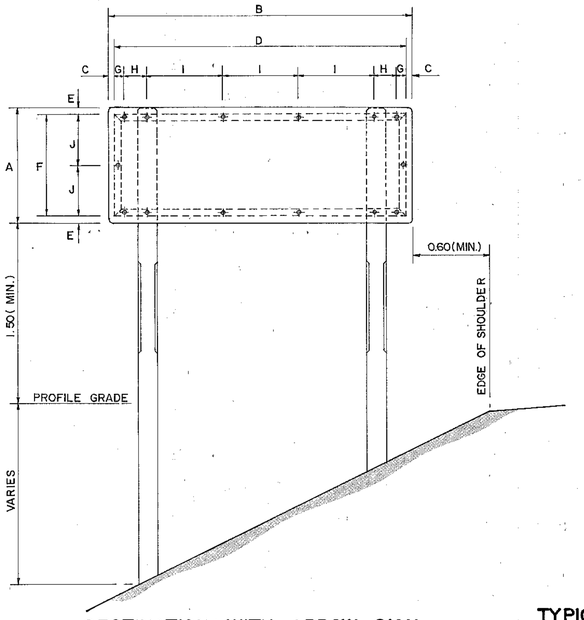


**DESTINATION WITH ARROW SIGN**
**DESTINATION AND DISTANCE SIGN**
**TOWN AND DISTRICT BOUNDARY SIGN**
**WITH THAI AND ENGLISH WORDS**
**OR THAI WORDS ONLY**

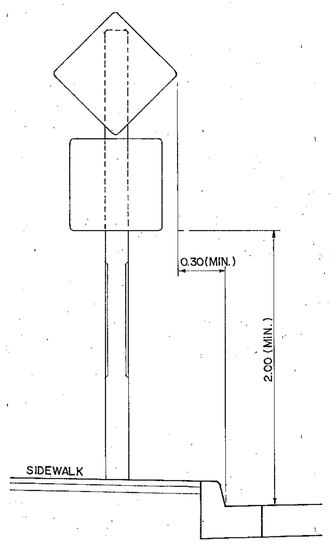


**TYPICAL SIGN INSTALLATION AT SIDEWALK**

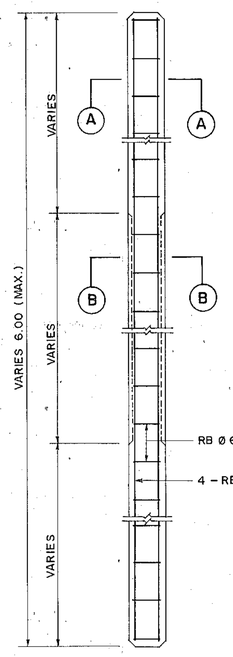


**REINFORCED CONCRETE POST DETAIL**
NOT TO SCALE

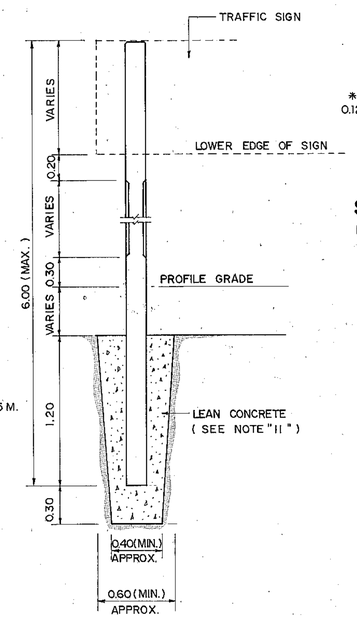


**SIGN POST INSTALLATION DETAIL**
NOT TO SCALE

* SIZE OF POST SHALL BE 0.12 x 0.12 M. FOR SINGLE POST AND TWIN POSTS WITH TOTAL AREA OF THE SIGN PLATES IS NOT MORE THAN 2 SQ.M. AND 4 SQ.M. RESPECTIVELY OR OTHERWISE THE SIZE SHALL BE 0.15 x 0.15 M.

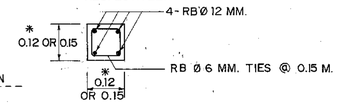


**SECTION (A)-(A)**
NOT TO SCALE

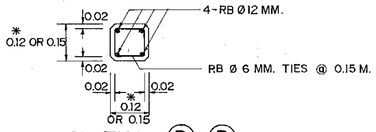


**SECTION (B)-(B)**
NOT TO SCALE

## NOTES :

1. ALL DIMENSIONS ARE IN METERS UNLESS OTHERWISE INDICATED.
2. SIGN PLATE SHALL BE MADE OF 2 MM. THICK ALLUMINIUM ALLOY.
3. ALLUMINIUM ALLOY SIGN PLATE SHALL CONFORM TO TIS. 331
4. UNLESS OTHERWISE INDICATED, SIGN AND THEIR SUPPORTS SHALL BE OF THE SIZES, COLORS AND TYPES PRESCRIBED BY, AND SITE IN ACCORDANCE WITH THE RECOMMENDATIONS OF, THE DEPARTMENT'S TRAFFIC CONTROL DEVICE MANUAL, PAST I ISSUED B.E. 2531
5. REFLECTIVE SHEETING SHALL CONFORM TO TIS.606 TYPE 1 (ESEFFICIENT OF RETRO-REFLECTION LEVEL 1)
6. SIGN FRAME SHALL BE MADE OF 50 x 25 x 1.6 MM. STEEL RECTANGULAR TUBING FRAME WELDED AND SMOOTHED IN PRIMING PAINT FOR FRAME SHALL BE RUST PREVENTIVE PAINT ( RED LEAD BASED PRIMERD FOR IRON AND STEEL SURFACED, TYPE 3 ) WHICH CONFORMS TO TIS. 389; THE SUCCEEDING COATING SHALL BE PAINTED WITH BLACK METAL PAINT.
7. LENGTH OF SIGN POSTS AND POSITIONS OF HOLES STATED IN THE DRAWING ARE FOR THE MIN. SIZE ONLY THESE LENGTHS AND POSITION OF HOLES SHALL BE ADJUSTED DEPENDING ON SITE CONDITIONS.
8. PORTION OF CONCRETE POST FROM GROUND LINE TO THE ELEVATION OF 20 CM. ABOVE FINISHED ROADWAY PROFILE SHALL BE PAINTED IN BLACK AND ALL OTHER PART SHALL BE PAINTED IN WHITE.
9. BACK OF SIGN, CLOSE TO EDGE OF PAVEMENT SIDE, SHALL BE STAMPED WITH DEPTH NOT LESS THAN 0.5 MM.
10. CONCRETE SHALL HAVE A MINIMUM ULTIMATE COMPRESSIVE STRENGTH OF 210 KSC. FOR 15 x 15 x 15 CM. CUBE AT 28 DAYS. AN APPROXIMATE MIX DESIGN PER CUBIC METER IS SUGGESTED AS FOLLOWS :

| | | |
|---|---|---|
| PORTLAND CEMENT TYPE 1 | 350 | KG. (MIN.) |
| SAND | 0.43 | $M^3$ |
| CRUSHED ROCK OR GRAVEL | 0.86 | $M^3$ |
| CONCRETE SLUMP | 10 | CM. (MAX.) |

11. LEAN CONCRETE FOR SIGN POST BASE SHALL HAVE A PROPORTION OF CEMENT : SAND : AGGREGATE 1 : 3 : 6 BY VOLUME AND A CONCRETE SLUMP OF 10 CM. (MAX.).
12. CLEAR CONCRETE COVER SHALL BE 2.5 CM.
13. REINFORCING STEEL SHALL CONFORM TO TIS. 20 GRADE SR 24.

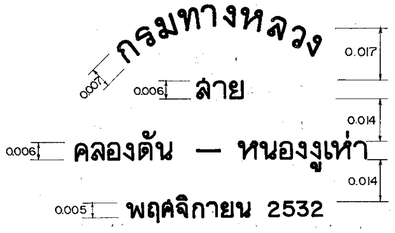


**TYPICAL BACK - SIGN STAMP**
SCALE 1 : 1

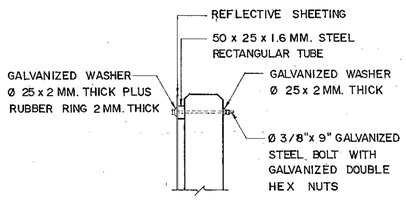


**TYPICAL FIXING OF SIGN PLATE**

**TABLE I** POSITION OF HOLES FOR FIXING SIGN PLATES TO SIGN POST

| DIMENSION | REGULATORY SIGN SIZE (CM.) | | | WARNING SIGN SIZE (CM.) | | | ROUTE MARKER (CM.) | | | ROUTE TURN ASSEMBLIES TYPE I & TYPE II (CM.) | | |
|---|---|---|---|---|---|---|---|---|---|---|---|---|
| | 60 | 75 | 90 | 60 | 75 | 90 | 60 | 75 | 90 | 60 | 75 | 90 |
| A | 7.5 | 15 | 15 | 20 | 20 | 20 | 7.5 | 7.5 | 7.5 | 7.5 | 7.5 | 7.5 |
| B | 45 | 45 | 60 | 45 | 68.5 | 90 | 45 | 60 | 75 | 45 | 60 | 75 |
| C | 7.5 | 15 | 15 | 20 | 17.5 | 17.5 | 7.5 | 7.5 | 7.5 | 7.5 | 7.5 | 7.5 |
| D | | | | | | | 7.5 | 7.5 | 7.5 | 7.5 | 7.5 | 7.5 |
| E | | | | | | | 7.5 | 7.5 | 7.5 | 7.5 | 7.5 | 7.5 |
| F | | | | | | | 22.5 | 35 | 45 | 22.5 | 35 | 45 |
| G | | | | | | | 10 | 7.5 | 7.5 | 10 | 7.5 | 7.5 |

**TABLE II** POSITION OF HOLES FOR FIXING SIGN PLATES TO SIGN POST

| SIGN SIZE (CM.) | | DIMENSIONS (CM.) | | | | | | | | REMARK |
|---|---|---|---|---|---|---|---|---|---|---|
| WIDTH A | LENGTH B | C | D | E | F | G | H | I | J | |
| 75<br>90 | 210<br>240 | 5<br>20 | 200<br>200 | 5<br>12.5 | 65<br>65 | 7.5<br>7.5 | 17.5<br>17.5 | 50<br>50 | 32.5<br>32.5 | DESTINATION WITH ARROW SIGN, THAI & ENGLISH WORDS |
| 60<br>75 | 210<br>240 | 5<br>20 | 200<br>200 | 5<br>12.5 | 50<br>50 | 7.5<br>7.5 | 17.5<br>17.5 | 50<br>50 | 25<br>25 | DESTINATION WITH ARROW SIGN, THAI WORDS ONLY |
| 75<br>90 | 180<br>180 | 5<br>5 | 170<br>170 | 5<br>12.5 | 65<br>65 | 7.5<br>7.5 | 17.5<br>17.5 | 40<br>40 | 32.5<br>32.5 | DESTINATION AND DISTANCE SIGN, THAI & ENGLISH WORDS |
| 60<br>75 | 180<br>180 | 5<br>5 | 170<br>170 | 5<br>12.5 | 50<br>50 | 7.5<br>7.5 | 17.5<br>17.5 | 40<br>40 | 25<br>25 | DESTINATION AND DISTANCE SIGN, THAI ONLY |
| 65<br>80 | 180<br>180 | 5<br>5 | 170<br>170 | 5<br>12.5 | 55<br>55 | 7.5<br>7.5 | 17.5<br>17.5 | 40<br>40 | 27.5<br>27.5 | TOWN & DISTRICT BOUNDARY SIGN, THAI & ENGLISH WORDS |

# KINGDOM OF THAILAND
## MINISTRY OF TRANSPORT AND COMMUNICATIONS
## DEPARTMENT OF HIGHWAYS

STANDARD DRAWING

MINOR SIGN & SIGN POST DETAILS

| | | |
|---|---|---|
| DESIGNED : D.O.H. & CONSULTANTS | CHECKED : | DATE JULY 1994 |
| SUBMITTED : (DIRECTOR OF LOCATION & DESIGN DIVISION) | | SCALE NONE |
| | | DWG. NO. RS-101 |
| APPROVED : (DIRECTOR GENERAL) | | SHEET NO. 18 |

ทางก่อสร้าง
โปรดระมัดระวัง

( 2 - 90ก - 90 )

สะพานกำลังก่อสร้าง
โปรดระมัดระวัง

( 2 - 90ข - 90 )

( 2 - 7 - 90 )

( 2 - 8 - 90 )

( 2 - 27 - 90 )

( 2 - 29 - 90 )

ทางก่อสร้าง
ยังไม่เปิดเป็นทางสาธารณะ

( 2 - 91ก - 90 )

กำลังก่อสร้าง
ยังไม่เปิดเป็นทางสาธารณะ

( 2 - 91ข - 90 )

( 2 - 34 - 90 )

( 2 - 36 - 90 )

( 2 - 106 - 90 )

โครงการก่อสร้าง.....
ทางหลวง..... หมายเลข.....
ตอน..... กม. ..... ถึง กม. .....
ก่อสร้างโดย.....
แล้วเสร็จประมาณ.....
ออกแบบและควบคุมโดย **กรมทางหลวง**

( 3 - 100ก - 240 )

ประกาศ (ชื่อหน่วยงาน)
(ชื่อหน่วยงาน) ..... กำหนดดำเนินการ (ทำอะไร) .....
..... ขนาดของงาน .....
..... (เนื้องาน กว้าง, ยาว) .....
ดำเนินการโดย ..... โทรศัพท์ .....
สัญญาเริ่มต้น ..... สัญญาสิ้นสุด .....
รวม ..... วัน ต่ออายุสัญญา ..... (ถ้ามี) .....
งบประมาณทั้งสิ้น ..... บาท
เจ้าหน้าที่ควบคุม ..... (ชื่อ, สกุล, ตำแหน่ง, สังกัด)
..... โทรศัพท์ .....

( 3 - 100ข - 240 )

( FOR BANGKOK AREA ONLY )

( 2 - 95 - 90 )

( 2 - 96 - 90 )

( 2 - 97 - 90 )

สำนักงานควบคุมโครงการ กม.

( 3 - 101 - 75 )

( 2 - 100 - 90 )

( 2 - 101 - 90 )

( 2 - 102 - 90 )

( 2 - 103 - 90 )

สำนักงานควบคุม
โครงการก่อสร้าง
1 กม.

( 3 - 102 - 120 )

จุดเริ่มต้น
โครงการก่อสร้าง

( 3 - 102ก - 120 )

จุดสิ้นสุด
โครงการก่อสร้าง

( 3 - 103 - 120 )

## ROAD SIGNS MOUNTING AT BEGINNING AND END OF PROJECT

NOT TO SCALE

( 2 - 26 - 90 )

( 2 - 105 - 90 )

งานก่อสร้างทาง
ข้างหน้า

( 2 - 93ก - 90 )

งานก่อสร้างสะพาน
ข้างหน้า

( 2 - 93ข - 90 )

FOR MOUNTING DISTANCE OVER 300 M.
CHANGE WORDING " ข้างหน้า " TO " 1 กม. "
OR " 500 ม. " OR AS MOUNTING DISTANCE

## WARNING SIGNS MOUNTING AT APPROACHING WORKING SITE

NOT TO SCALE

( 1 - 3 - 90 )

( 1 - 5 - 90 )

( 1 - 6 - 90 )

ทางก่อสร้าง
ยาว กม.

( 3 - 94 - 90 )

สุดเขต
ก่อสร้าง

( 3 - 95 - 90 )

( 1 - 21 - 90 )

1 - 32 - 90 )

( 1 - 33 - 90 )

## ROAD SIGNS MOUNTING AT OPENING AND END OF WORK SITE

NOT TO SCALE

เส้นทางชั่วคราว
ไปนครราชสีมา

( 3 - 92 - 90 )

## TEMPORARY ROAD GUIDE SIGN

NOT TO SCALE

( 1 - 25 - 90 )

( 2 - 80 - 60 )

## SIGNS TO CONTROL SPEED

NOT TO SCALE

| TRAFFIC SIGN CONTROLLED PATTERN | | SIZE (CM.) | LETTER SIZE 1 ST ROW | LETTER SIZE 2ND ROW | RECOMMENDED LOCATION | REFLETO-RIZED PROPERTIES | COLOUR ON BOARD |
|---|---|---|---|---|---|---|---|
| ROAD SIGNS MOUNTING AT BEGINNING AND END OF PROJECT | 2 - 90ก - 90 | 90 x 240 | 20 | 15 | FOR EXISTING ROAD CONSTRUCTION | REFLECT | RED - ORANGE |
| | 2 - 90ข - 90 | 90 x 240 | 20 | 15 | FOR EXISTING ROAD CONSTRUCTION | REFLECT | RED - ORANGE |
| | 2 - 91ก - 90 | 90 x 240 | 20 | 15 | FOR NEW ROAD CONSTRUCTION THAT ALLOWS SOME TRAFFIC | | RED - ORANGE |
| | 2 - 91ข - 90 | 90 x 240 | 20 | 15 | FOR NEW ROAD CONSTRUCTION THAT ALLOWS SOME TRAFFIC | | RED - ORANGE |
| | 3 - 100ก - 240 | 240 x 360 | FOR 1ST-2ND ROW AND กรมทางหลวง | 15 | MOUNTING AT BEGINNING OF PROJECT | | WHITE |
| | 3 - 100ข - 240 | 240 x 360 | OTHER | 20 | MOUNTING AT BEGINNING OF PROJECT | | WHITE |
| | 3 - 101 - 75 | 75 x 360 | 20 | - | MOUNTING WITH 3 - 100ก - 240 SIGN BOARD | | WHITE |
| | | | 1ST-2ND ROW | 15 | MOUNTING ALONE | | WHITE |
| | | | 3RD ROW | 20 | | | |
| | 3 - 102ก - 120 | 120 x 240 | 25 | 15 | MOUNTING AT BEGINNING OF PROJECT | REFLECT | RED - ORANGE |
| | 3 - 103 - 120 | 120 x 240 | 25 | 15 | MOUNTING AT END OF PROJECT | REFLECT | RED - ORANGE |
| ROAD SIGNS MOUNTING AT OPENING WORK SITE | 2 - 93ก - 90 | 90 x 240 | 20 | 20 | MOUNTING AT 200 M. BEFORE APPROACHING | REFLECT | RED - ORANGE |
| | 2 - 93ข - 90 | 90 x 240 | 20 | 20 | MOUNTING AT 200 M. BEFORE APPROACHING | REFLECT | RED - ORANGE |
| | 3 - 94 - 90 | 90 x 180 | 20 | 20 | MOUNTING AT 200. M. BEFORE APPROACHING | REFLECT | RED - ORANGE |
| | 3 - 95 - 90 | 75 x 120 | 15 | 15 | MOUNTING AT END OF WORK SITE | REFLECT | RED - ORANGE |
| TEMPORARY ROAD GUIDE SIGNS | 3 - 92 - 90 | 90 x 135 | 10 | 10 | MOUNTING WITH 3 - 90 OR 3 - 91 SIGN BOARD | | WHITE |
| WARNING SIGNS MOUNTING AT APPROACHING WORK SITE | 2 - 7 - 90 | 90 x 90 | — | — | MOUNTING AT 100 - 200 M. BEFORE APPROACHING | REFLECT | RED - ORANGE |
| | 2 - 8 - 90 | 90 x 90 | — | — | MOUNTING AT 100 - 200 M. BEFORE APPROACHING | REFLECT | RED - ORANGE |
| | 2 - 27 - 90 | 90 x 90 | — | — | MOUNTING AT 100 - 200 M. BEFORE APPROACHING | REFLECT | RED - ORANGE |
| | 2 - 29 - 90 | 90 x 90 | — | — | MOUNTING AT 100 - 200 M. BEFORE APPROACHING | REFLECT | RED - ORANGE |
| | 2 - 34 - 90 | 90 x 90 | — | — | MOUNTING AT 100 - 200 M. BEFORE APPROACHING | REFLECT | RED - ORANGE |
| | 2 - 36 - 90 | 90 x 90 | — | — | MOUNTING AT 100 - 200 M. BEFORE APPROACHING | REFLECT | RED - ORANGE |
| | 2 - 106 - 90 | 90 x 150 | 20 | 15 | MOUNTING AT 100 - 200 M. BEFORE APPROACHING | | WHITE |
| | 2 - 95 - 90 | UPPER SIGN BOARD 90x90 | | | MOUNTING AT 150 M. BEFORE APPROACHING | REFLECT | RED - ORANGE |
| | 2 - 96 - 90 | LOWER SIGN BOARD | 10 | 10 | MOUNTING AT 150 M. BEFORE APPROACHING | REFLECT | RED - ORANGE |
| | 2 - 97 - 90 | 60 x 80 | | | MOUNTING AT 150 M. BEFORE APPROACHING | — | RED - ORANGE |
| | 2 - 102 - 90 | 90 x 150 | 20 | 15 | MOUNTING NEAR AND SAME SIDE OF STOCKPILE MATERIAL | | WHITE |
| | 2 - 100 - 90 | 90 x 90 | — | — | MOUNTING AT 150 M. BEFORE APPROACHING | REFLECT | RED - ORANGE |
| | 2 - 101 - 90 | 90 x 90 | — | — | MOUNTING AT 150 M. BEFORE APPROACHING | — | RED - ORANGE |
| | 2 - 26 - 90 | 90 x 90 | — | — | MOUNTING AT 100 - 200 M. BEFORE APPROACHING | REFLECT | YELLOW |
| | 2 - 103 - 90 | 90 x 150 | 20 | 15 | FOR EMERGENCY CASE MOUNTING ON BARRICADE | REFLECT | WHITE |
| | 2 - 105 - 90 | 90 x 90 | — | — | FOR EMERGENCY CASE WHERE SUITABLE ROAD SIGNS ARE NOT AVAILABLE | REFLECT | RED - ORANGE |
| SIGNS TO CONTROL SPEED | 1 - 3 - 90 | 90 | — | — | MOUNTING ON CONTROLLED POINT OR NEARER IN DISTANCE 3 - 5 M. | REFLECT | WHITE |
| | 1 - 5 - 90 | 90 | — | — | MOUNTING ON CONTROLLED POINT OR NEARER IN DISTANCE 3 - 5 M. | REFLECT | WHITE |
| | 1 - 6 - 90 | 90 | — | — | MOUNTING ON CONTROLLED POINT OR NEARER IN DISTANCE 3 - 5 M. | REFLECT | WHITE |
| | 1 - 21 - 90 | 90 | — | — | MOUNTING ON CONTROLLED POINT OR NEARER IN DISTANCE 3 - 5 M. | REFLECT | BLUE |
| | 1 - 32 - 90 | 90 | — | — | MOUNTING ON CONTROLLED POINT OR NEARER IN DISTANCE 3 - 5 M. | REFLECT | WHITE |
| | 1 - 33 - 90 | 90 | — | — | MOUNTING ON CONTROLLED POINT OR NEARER IN DISTANCE 3 - 5 M. | REFLECT | WHITE |
| | 1 - 25 - 90 | 90 | 25 | — | MOUNTING BEFORE APPROACHING CONTROLLED SPEED ZONE | REFLECT | WHITE |
| | 2 - 80 - 60 | 60 x 60 | 20 | 15 | MOUNTING WHERE ROAD CONDITION ALLOWS TO THE INDICATED SPEED | REFLECT | RED - ORANGE |

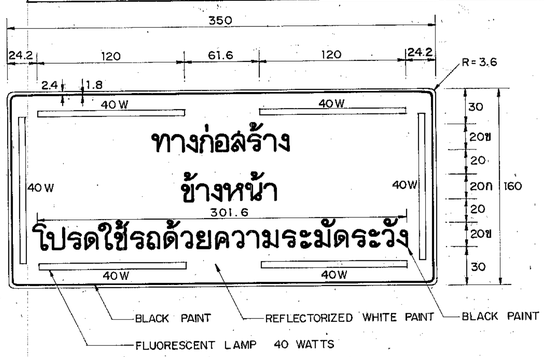


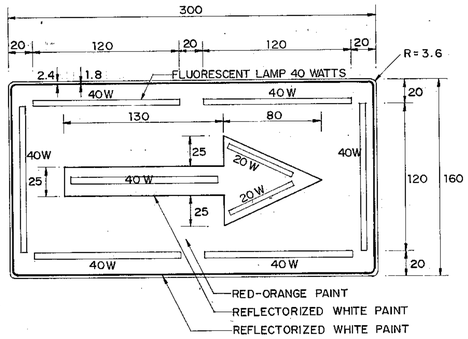


REMARKS :
1. THE SIGNS WITH FLUORESCENT LAMP SHALL BE MOUNTED FOR ROAD WHICH ADT EXCEEDS 4,000 VEHICLE/DAY .
2. ALL DIMENSIONS ARE IN CENTIMETERS UNLESS OTHERWISE INDICATED.

**KINGDOM OF THAILAND**
**MINISTRY OF TRANSPORT AND COMMUNICATIONS**
**DEPARTMENT OF HIGHWAYS**

STANDARD DRAWING
TRAFFIC CONTROL DEVICES
FOR HIGHWAYS UNDER CONSTRUCTION-I

| | | |
|---|---|---|
| DESIGNED : D.O.H. & CONSULTANTS | CHECKED : | DATE JULY 1994 |
| SUBMITTED : (DIRECTOR OF LOCATION & DESIGN DIVISION) | | SCALE NONE |
| | | DWG. NO. RS-102 |
| APPROVED : (DIRECTOR GENERAL) | | SHEET NO. 19 |

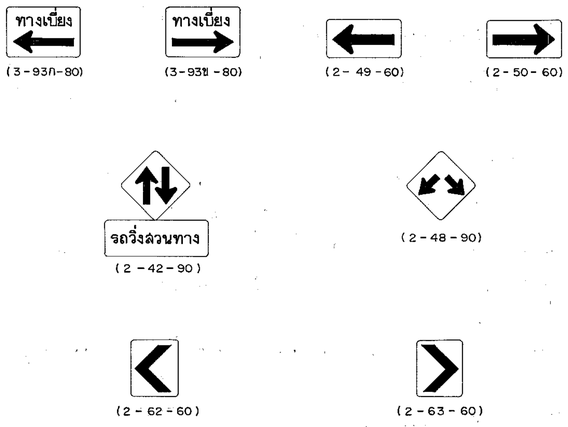


## ROAD SIGN MOUNTING AT TRAFFIC LINE CHANGE OR TRAFFIC CONTROL

NOT TO SCALE

AUTOMATIC FLASHER 15 CM. BULB OR EQUIVALENT FOR ROAD WHICH ADT EXCEEDS 8,000 VEHICLE / DAY

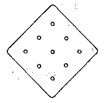

9 - YELLOW REFLECTORIZED CIRCLES TARGET FOR ROAD WHICH ADT EXCEEDS 4,000 VEHICLE / DAY

## SIGNS TO INDICATE ROAD OBSTRUCTION

NOT TO SCALE

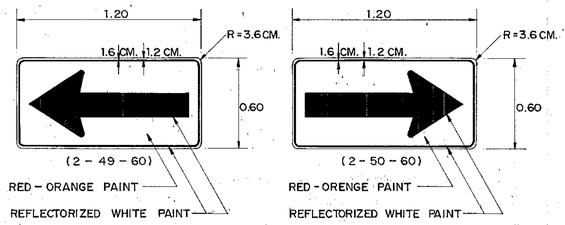


| TRAFFIC SIGN CONTROLLED PATTERN | | SIZE (CM.) | LETTER SIZE 1ST ROW | LETTER SIZE 2ND ROW | RECOMMENDED LOCATION | REFLECTO-RIZED PROPERTIES | COLOUR ON BOARD |
|---|---|---|---|---|---|---|---|
| ROAD SIGNS MOUNTING AT TRAFFIC LINE CHANGE OR TRAFFIC CONTROL ARE REQUIRED | 3-93ก-80 | 80 x 120 | 15ข | | WHERE SIGN BOARD IS VISIBLE WITH NOT LESS THAN 200 M. | REFLECT | RED - ORANGE |
| | 3-93ข-80 | 80 x 120 | 15ข | | WHERE SIGN BOARD IS VISIBLE WITH NOT LESS THAN 200 M. | REFLECT | RED - ORANGE |
| | 2-49-60 | 60 x 120 | - | - | MOUNTING WHERE TRAFFIC LINE CHANGE | REFLECT | RED - ORANGE |
| | 2-50-60 | 60 x 120 | - | - | MOUNTING WHERE TRAFFIC LINE CHANGE | REFLECT | RED - ORANGE |
| | 2-42-90 | UPPER SIGN BOARD 90 x 90 | - | - | MOUNTING AT BEGINNING OF TWO - WAY TRAFFIC | REFLECT | RED - ORANGE |
| | 2-42-90 | LOWER SIGN BOARD 60 x 180 | 20ก | - | MOUNTING AT BEGINNING OF TWO - WAY TRAFFIC | | WHITE |
| | 2-48-90 | 90 x 90 | - | - | MOUNTING WHERE BOTH LEFT AND RIGHT TRAFFICS ARE PERMITTED | REFLECT | RED - ORANGE |
| | 2-62-60 | 60 x 75 | - | - | MOUNTING AT HORIZONTAL CURVE | REFLECT | RED - ORANGE |
| | 2-63-60 | 60 x 75 | - | - | MOUNTING AT HORIZONTAL CURVE | REFLECT | RED - ORANGE |
| TRAFFIC CHANNELIZATION INSTRUMENTS | CONE OR POST | - | - | - | TO INDICATE TRAFFIC LINE OR SIDE ROAD OBSTRUCTION LINE, MOUNTING @ 30 M. (MAX.) INTERVAL | | |
| | VERTICAL PANEL BARREL RAIL | - | - | - | TO INDICATE TRAFFIC LINE OR SIDE ROAD OBSTRUCTION LINE | | |
| | LIGHTING | - | - | - | FOR ROAD WHICH ADT EXCEEDS 8,000 VEHICLE / DAY | | |
| SIGNS TO INDICATE ROAD OBSTRUCTION | FLASHER | - | - | - | FOR ROAD WHICH ADT EXCEEDS 8,000 VEHICLE / DAY | | |
| | 9 YELLOW REFLECTORIZED CIRCLES TARGET | 7.5 x 7.5 | - | - | FOR ROAD WHICH ADT EXCEEDS 4,000 VEHICLE / DAY | | |
| BARRICADE | SIDE ROAD BARRICADE TO REDUCE SPEED | - | - | - | MOUNTING WITH SPACING 50 - 100 M. APPROXIMATE, TAPERING TO PAVEMENT EDGE | | |

## NOTES :

1. ALL DIMENSIONS ARE IN METERS UNLESS OTHERWISE INDICATED.
2. REFLECTORIZED PROPERTIES MEANS : SIGN BOARD WHICH REFLECTING BY REFLECTIVE SHEETING OR REFLECTIVE BEADS OR OTHERS UNDER THE APPROVAL OF THE ENGINEER.
3. SIZE OF WARNING SIGN CODE 2-49-60 AND 2-50-60 MAY BE INCREMENTED AT SUITABLE SIZE ON HIGH SPEED AND HEAVY TRAFFIC ROAD UNDER THE APPROVAL OF THE ENGINEER.

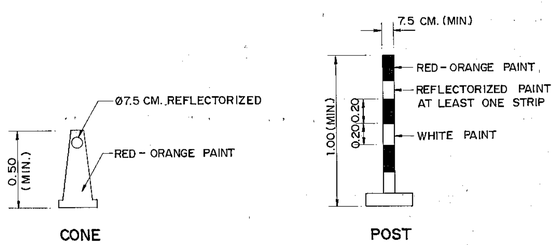


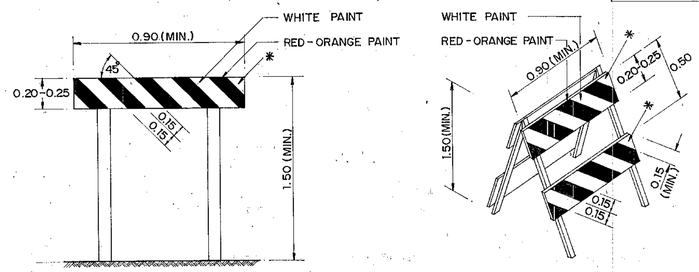


## BARRICADE TYPE I

NOT TO SCALE

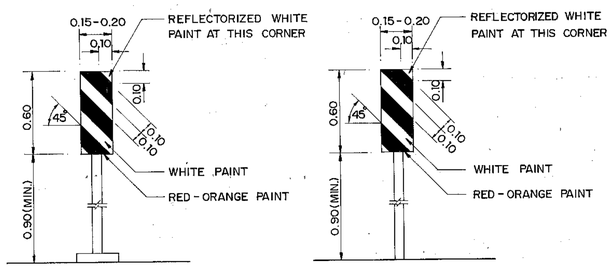


VERTICAL PANEL

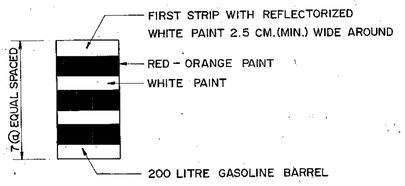


BARREL

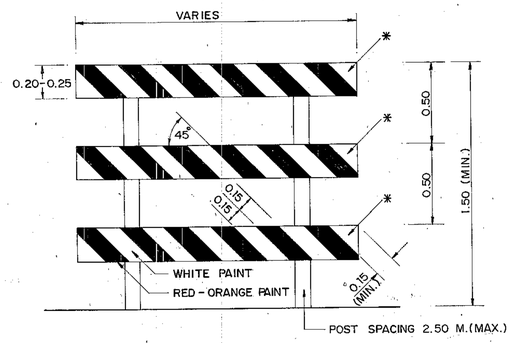


## BARRICADE TYPE II

NOT TO SCALE

## PROVISION :

1. TRAFFIC CONTROL DEVICES FOR HIGHWAYS UNDER CONSTRUCTION SHALL BE IN ACCORDANCE WITH THIS DRAWING AND THE MANUAL OF TRAFFIC CONTROL DEVICES PART 3 AS PUBLISHED BY THE DOH.
2. SIGN BOARD FOR REFLECTORIZED SHALL BE METAL OR NON - METAL WHICH TOLERANCE TO ALL CLIMATES ALONG TERM OF CONTRACT UNDER THE APPROVAL OF THE ENGINEER.
3. THE AMOUNTS (IN TWO DIRECTIONS) AND SPACING OF WARNING SIGN BEFORE CONSTRUCTION AREA BESIDES OF THE NORMAL SIGNS ARE SHOWN IN THE TABLE BELOW

| CLASSIFICATION OF HIGHWAYS | WARNING SIGN SPACING BEFORE APPROACHING DIVERTED POINT(M.) REDUCED TRAFFIC LANE OR DIVERTED TRAFFIC LANE | SIDE ROAD OBSTRUCTION |
|---|---|---|
| EXPRESSWAY AND MAJOR RURAL HIGHWAY | 500 - 1,000 (2-3) | 300 - 500 (2) |
| RURAL HIGHWAY | 200 - 300 (2) | 150 - 200 (1) |
| URBAN HIGHWAY | 70 - 100 (1) | - |

4. FOR URBAN HIGHWAY WITH AMOUNT OF PEDESTRIANS, WALKWAY WHICH SAFETY SHALL BE PROVIDED FOR PEDESTRIANS.
5. THE CONTRATOR SHALL BE PROVIDED THE TRAFFIC CONTROL DEVICES FOR HIGHWAYS UNDER CONSTRUCTION ALL ITEMS.
6. IN CASE OF THE FORMAT IS NOT THE SAME AS THE DRAWINGS, THE MOUNTING OF TRAFFIC CONTROL DEVICES SHALL BE DIRECTED BY THE ENGINEER.

## TRAFFIC CHANNELIZATION INSTRUMENT TO BE USED

1. TO INDICATE SIDE ROAD HAZARD, VERTICAL PANEL OR BARREL SHALL BE INSTALLED BEFORE CONES, POSTS, VERTICAL PANELS, OR BARRELS FOLLOW ON THE LINE.
2. FOR ROAD WHICH ADT EXCEEDS 8,000 VEHICLE/DAY, RAIL LIGHTING SHALL BE REQUIRED ON TRAFFIC CHANNELIZATION INSTRUMENT POSITIONS.

## TRAFFIC CHANNELIZATION INSTRUMENTS

(RED - ORANGE PAINT OR RED - ORANGE PAINT ALTERNATE WITH WHITE PAINT)

## FOR BARRICADE TYPE I, II

* REFLECTIVE SHEETING OR REFLECTORIZED WHITE PAINT OR REFLECTORIZED CIRCLES TARGET OR FLASHER DEPENDED ON TRAFFIC VOLUME, MOUNTING AT THE LAST CORNER.
- FOR MOUNTING, THE PAINTED STRIPE SHALL BE INCLINED TO APPROACH TRAFFIC SIDE.

# KINGDOM OF THAILAND
MINISTRY OF TRANSPORT AND COMMUNICATIONS
DEPARTMENT OF HIGHWAYS

STANDARD DRAWING

TRAFFIC CONTROL DEVICES FOR HIGHWAYS UNDER CONSTRUCTION - II

| | | |
|---|---|---|
| DESIGNED : D.O.H. | CHECKED : | DATE JULY 1994 |
| SUBMITTED : (DIRECTOR OF LOCATION & DESIGN DIVISION) | | SCALE NONE |
| APPROVED : (DIRECTOR GENERAL) | | DWG. NO. RS - 103 |
| | | SHEET NO. 20 |

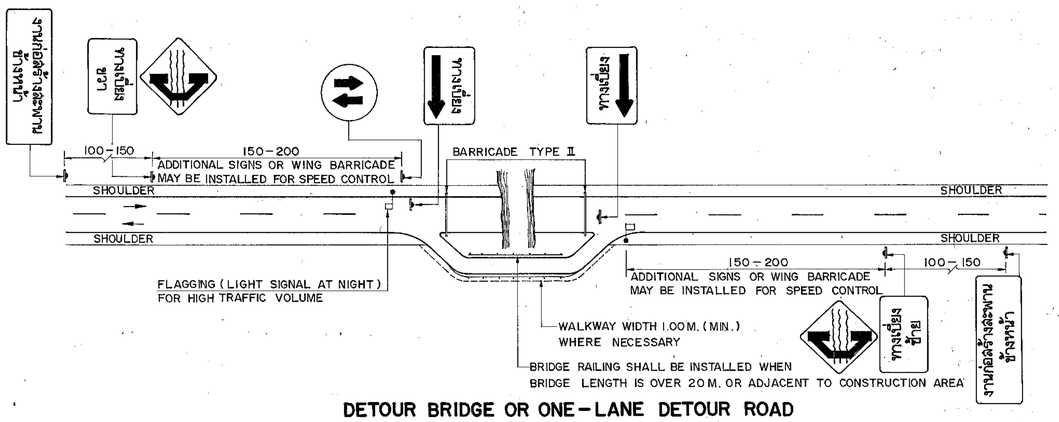


## DETOUR BRIDGE OR ONE – LANE DETOUR ROAD

NOT TO SCALE

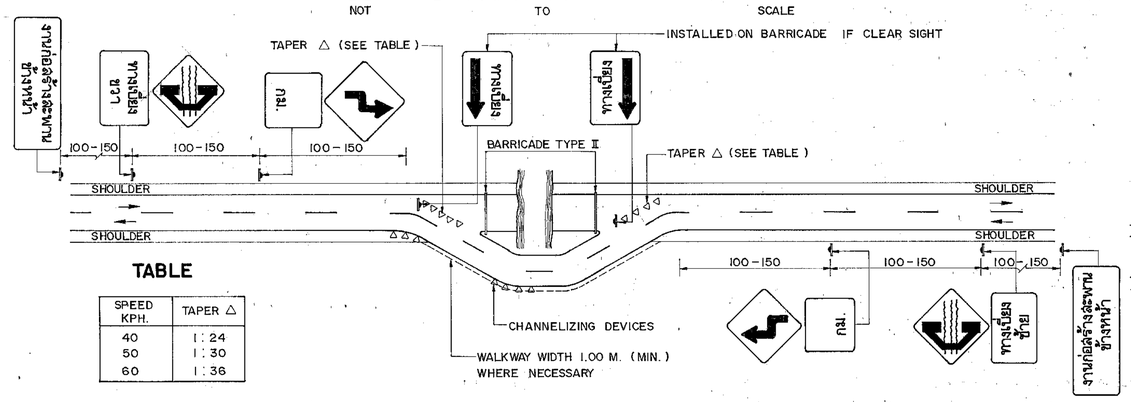


**TABLE**

| SPEED KPH. | TAPER △ |
|---|---|
| 40 | 1 : 24 |
| 50 | 1 : 30 |
| 60 | 1 : 36 |

## DETOUR BRIDGE OR TWO – LANE DETOUR ROAD

NOT TO SCALE

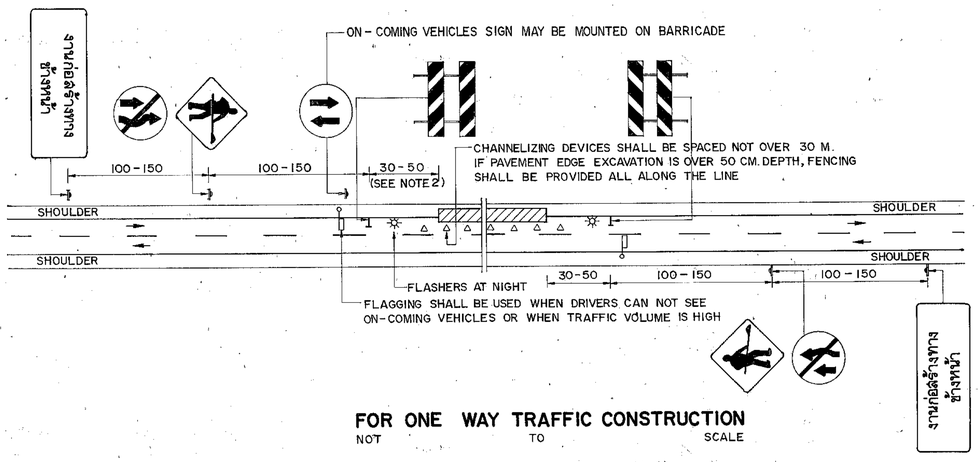


## FOR ONE WAY TRAFFIC CONSTRUCTION

NOT TO SCALE

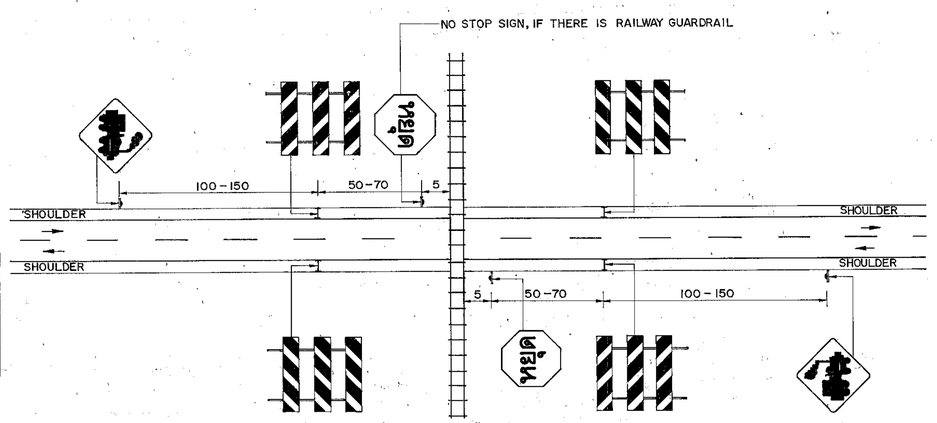


## HIGHWAY CONSTRUCTION FOR RAILWAY CROSSING ( NO PERMANENT CONTROL DEVICES )

NOT TO SCALE

## SYMBOLS :

- TRAFFIC SIGN
- BARRICADE TYPE I ONE FACE
- BARRICADE TYPE I ON TWO FACES
- BARRICADE TYPE II
- ● VERTICAL PANEL OR BARREL REFLECTORIZED BY RETRO REFLECTIVE SHEETING OR REFLECTIVE MARKING
- △ CHANNELIZING DEVICES ARE
  - CONES
  - POSTS
  - BARRELS
  - VERTICAL PANEL
- FLAGGING OR GREEN, YELLOW AND RED TRAFFIC SIGNAL
- CONSTRUCTION AREA

## NOTES :

1. ALL DIMENSIONS ARE IN METERS UNLESS OTHERWISE INDICATED
2. IF CONSTRUCTION AREA IS OUT OF VERTICAL OR HORIZONTAL CURVE WITH SIGHT DISTANCE UNDER 100 M., THE BARRICADE SHALL BE INSTALLED AT BEGINNING POINT OF CURVE .

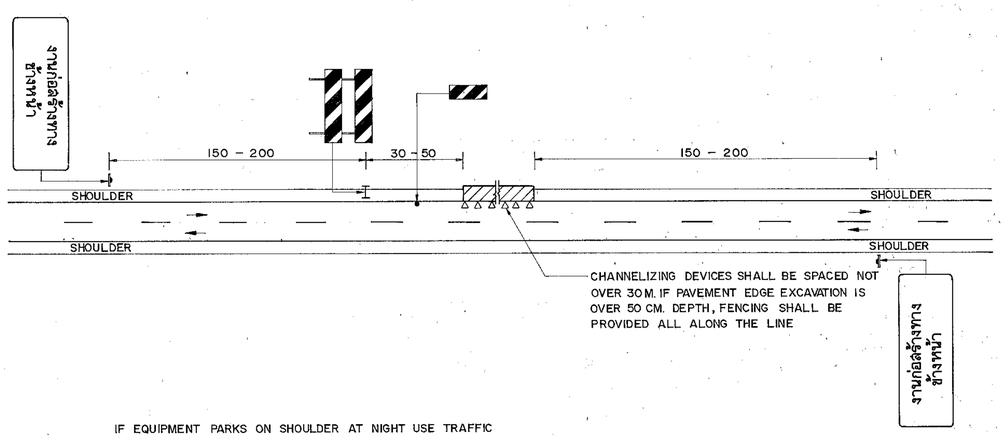


IF EQUIPMENT PARKS ON SHOULDER AT NIGHT USE TRAFFIC CONTROL DEVICES AS THIS DRAWING BUT " ระวังอันตราย " SIGN ( 2 – 105 – 90 ). SHALL BE INSTALLED INSTEAD OF " งานก่อสร้างทางข้างหน้า " SIGN ( 2 – 93ก – 90 )

## PAVEMENT WIDENING

NOT TO SCALE

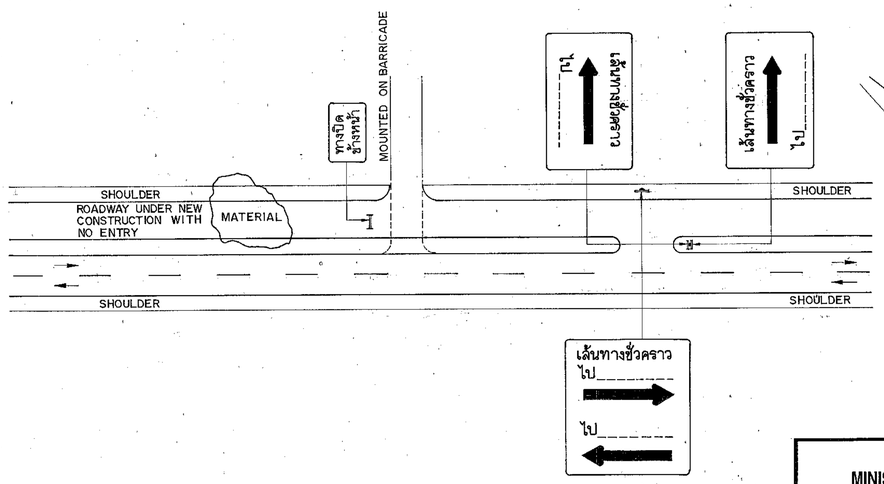


## NEW HIGHWAY CONSTRUCTION IN CASE OF CLOSED AND ONE-WAY ENTRANCE

NOT TO SCALE

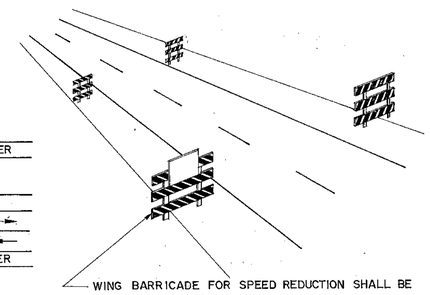


## SPEED CONTROL SIGN

NOT TO SCALE

# KINGDOM OF THAILAND

MINISTRY OF TRANSPORT AND COMMUNICATIONS
DEPARTMENT OF HIGHWAYS

STANDARD DRAWING

TRAFFIC CONTROL DEVICES FOR HIGHWAYS UNDER CONSTRUCTION – III

| | | |
|---|---|---|
| DESIGNED : D.O.H. | CHECKED : | DATE JULY 1994 |
| SUBMITTED : (DIRECTOR OF LOCATION & DESIGN DIVISION) | | SCALE NONE |
| APPROVED : (DIRECTOR GENERAL) | | DWG. NO. RS-104 |
| | | SHEET NO. 21 |

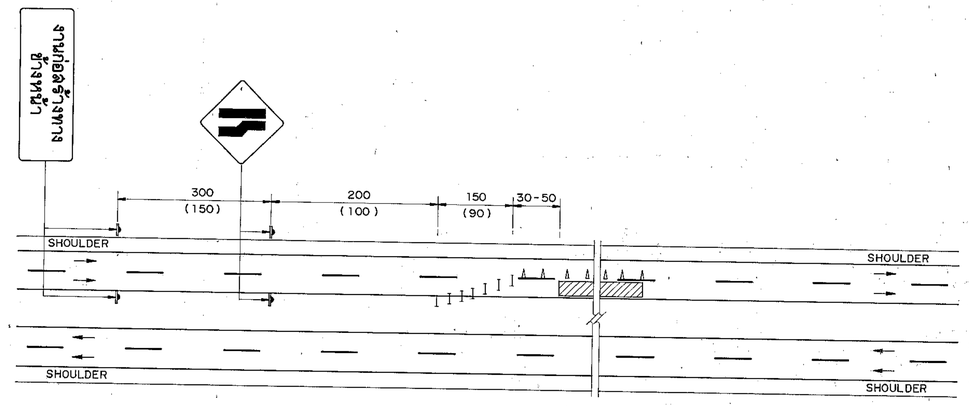


A. FOUR – LANE HIGHWAYS

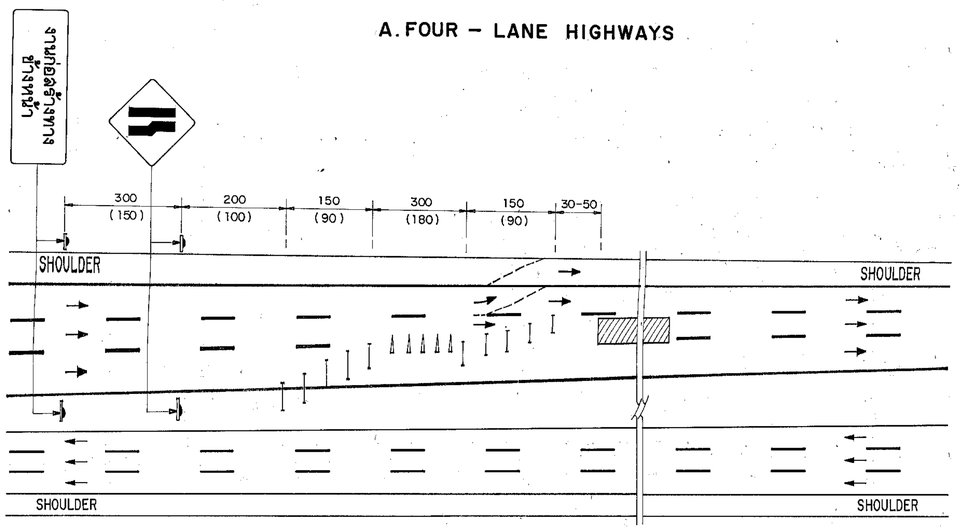


B. SIX – LANE HIGHWAYS WITH SHOULDER, MIDDLE LANE CLOSED

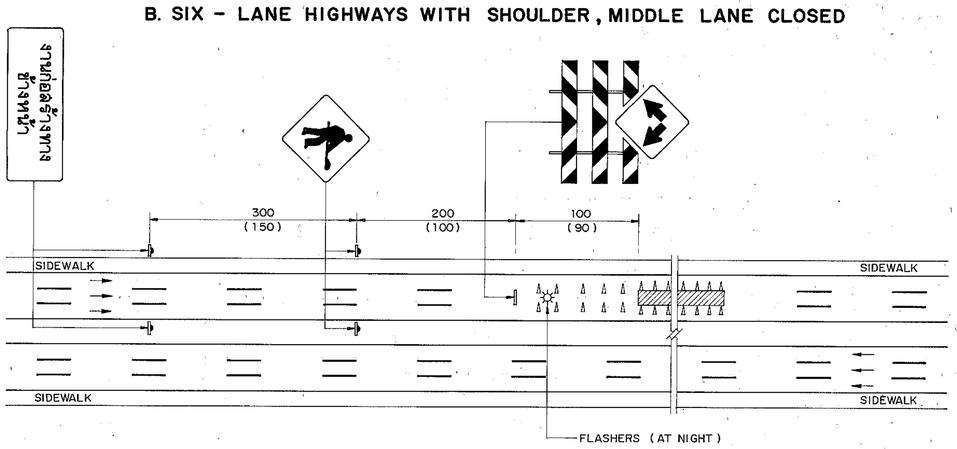


C. SIX – LANE HIGHWAYS WITHOUT SHOULDER, MIDDLE LANE CLOSED

HIGHWAYS CONSTRUCTION WITH ONE LANE CLOSED
NOT TO SCALE

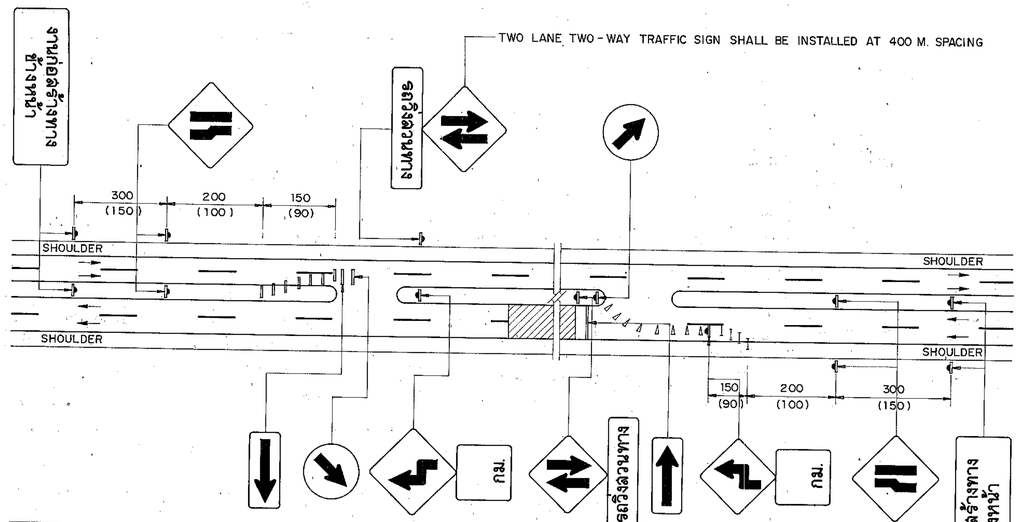


DIVIDED HIGHWAYS CONSTRUCTION, ONE WAY CLOSED
NOT TO SCALE

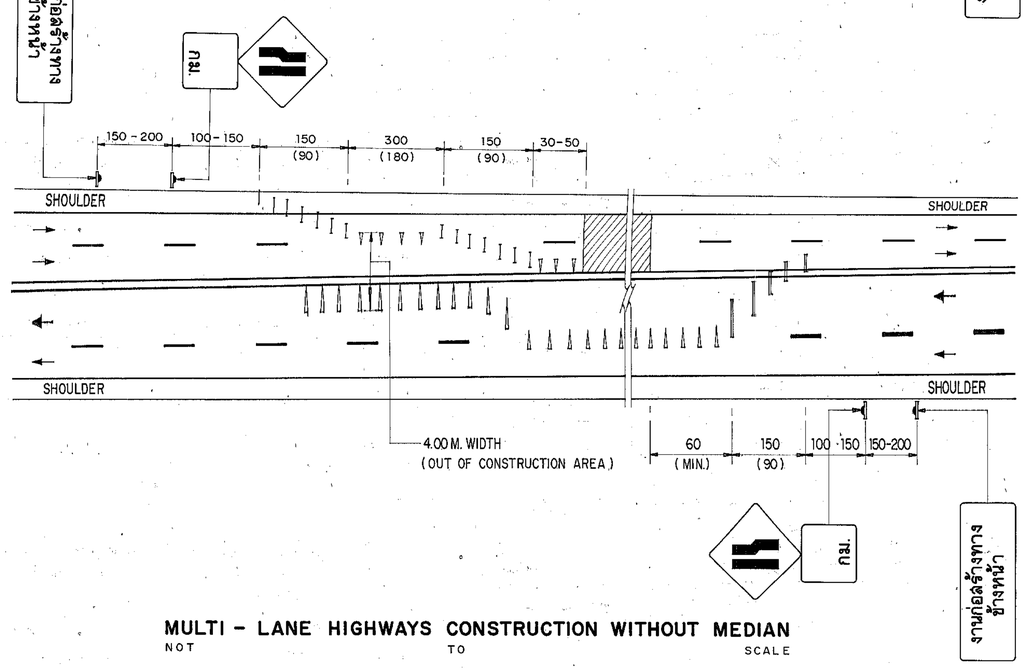


MULTI – LANE HIGHWAYS CONSTRUCTION WITHOUT MEDIAN
NOT TO SCALE

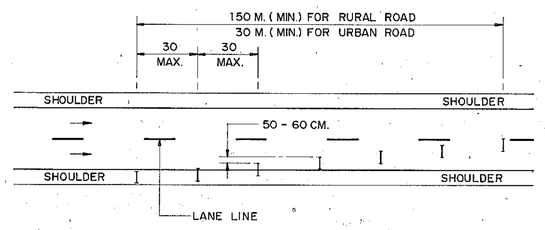


DETAIL OF LANE TRANSITION
NOT TO SCALE

## SYMBOLS :

- TRAFFIC SIGN
- BARRICADE TYPE I ONE FACE
- BARRICADE TYPE I ON TWO FACES
- BARRICADE TYPE II
- VERTICAL PANEL OR BARREL REFLECTORIZED BY RETRO REFLECTIVE SHEETING OR REFLECTIVE MARKING
- CHANNELIZING DEVICE ARE
  - CONES
  - POST
  - BARRELS
  - VERTICAL PANEL
- FLAGGING OR GREEN, YELLOW AND RED TRAFFIC SIGNAL
- CONSTRUCTION AREA

## NOTES :

1. ALL DIMENSIONS ARE IN METERS UNLESS OTHERWISE INDICATED.
2. NUMBER IN PARENTHESIS IS INSTALLATION DISTANCE FOR URBAN HIGHWAY.
3. INSTALLATION DISTANCE AND THE NUMBER OF AHEAD WARNING SIGN SHALL BE DETERMINED FROM PROVISION NO. 3

DWG. NO. RS-102

**KINGDOM OF THAILAND**
MINISTRY OF TRANSPORT AND COMMUNICATIONS
DEPARTMENT OF HIGHWAYS

STANDARD DRAWING
TRAFFIC CONTROL DEVICES
FOR HIGHWAYS UNDER CONSTRUCTION – IV

| | | |
|---|---|---|
| DESIGNED : D.O.H. | CHECKED : | DATE JULY 1994 |
| SUBMITTED : (DIRECTOR OF LOCATION & DESIGN DIVISION) | | SCALE NONE |
| | | DWG. NO. RS-105 |
| APPROVED : (DIRECTOR GENERAL) | | SHEET NO. 22 |

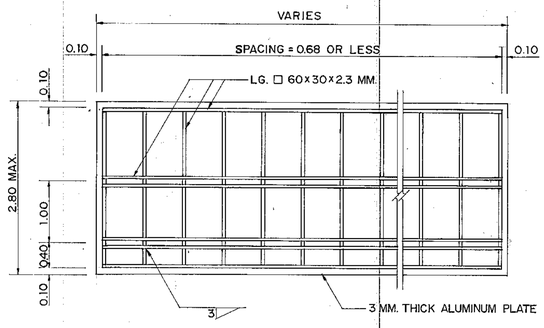


FRONT VIEW

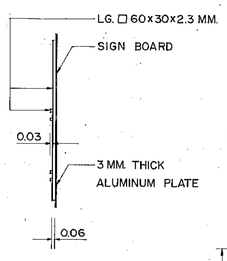


SIDE VIEW

## TYPICAL SIGN FRAME
SCALE 1 : 50

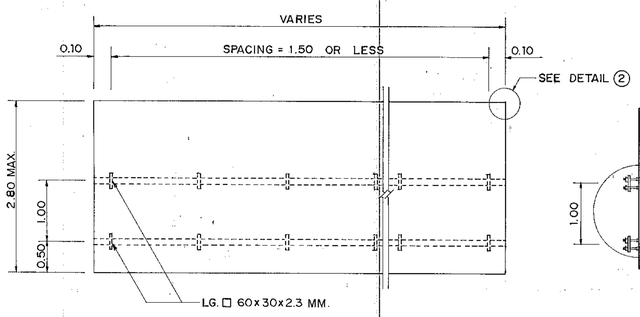


FRONT VIEW

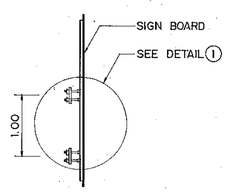


SIDE VIEW

## ERECTION FOR SIGN BOARD
SCALE 1 : 50

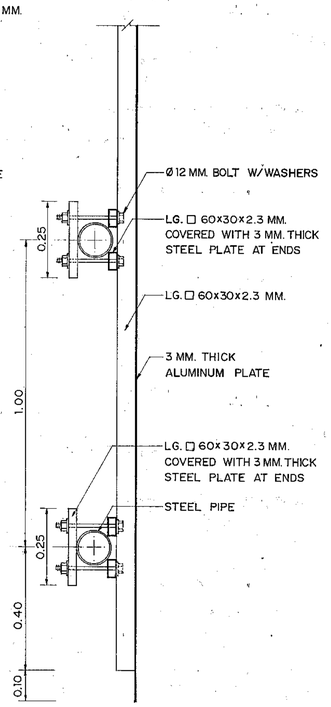


## DETAIL 1
SCALE 1 : 10

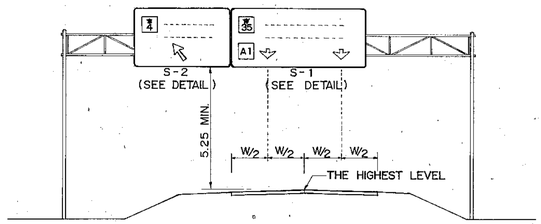


## SECTION FOR OVERHEAD TRAFFIC SIGN
NOT TO SCALE

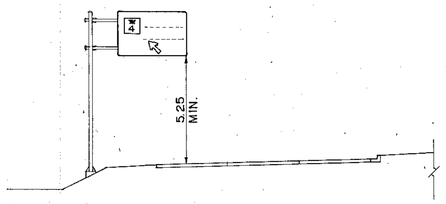


## SECTION FOR OVERHANGING TRAFFIC SIGN
NOT TO SCALE

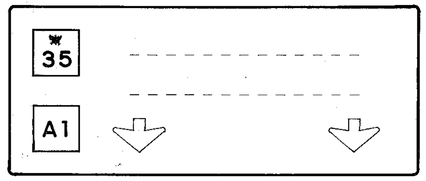


## DETAIL "S-1"

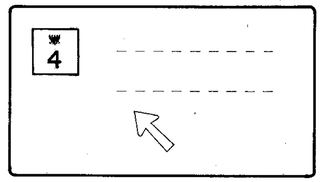


## DETAIL "S-2"

## NOTES :

1. ALL DIMENSIONS ARE IN METERS UNLESS OTHERWISE INDICATED.
2. LIGHT GAUGE STEEL (LG.) OF SIGN FRAME SHALL BE CONNECTED TOGETHER WITH 3 MM. WELD.
3. ALL STEEL AND BOLT ASSEMBLY SHALL BE GALVANIZED ZINC COATING SHALL NOT BE LESS THAN 550 GRAMS PER SQUARE METER.
4. OVERHEAD SIGN BOARD SHALL BE OF ALUMINUM PLATE COVERED WITH REFLECTIVE SHEETING CONFORMED TO TIS 606 TYPE 2 (ESEFFICIÉNT OF RETRO-REFLECTION LEVEL 2)

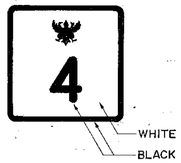


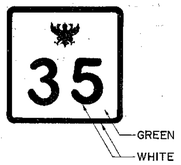


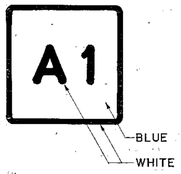


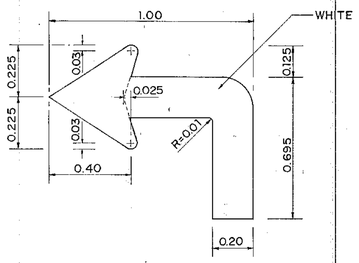


## TURN OFF ARROW
SCALE 1 : 15

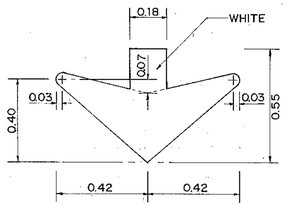


## VERTICAL DOWN ARROW
SCALE 1 : 15

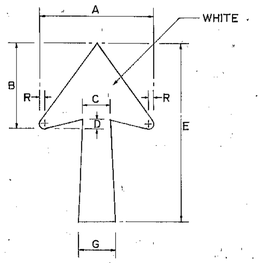


## TURN OFF ARROW
NOT TO SCALE

| ALPHABET HEIGHT (CM.) | DIMENSION (CM.) | | | | | | |
|---|---|---|---|---|---|---|---|
| | A | B | C | D | E | F | G |
| 20 | 38 | 30 | 9 | 3 | 62 | 1.5 | 12 |
| 25 – 35 | 46 | 35 | 12 | 4 | 75 | 2 | 16 |
| 40 | 56 | 42 | 14 | 5 | 87 | 2.5 | 18 |

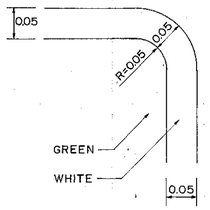


## DETAIL 2
SCALE 1 : 5

# KINGDOM OF THAILAND
## MINISTRY OF TRANSPORT AND COMMUNICATIONS
## DEPARTMENT OF HIGHWAYS

STANDARD DRAWING

OVERHEAD SIGN BOARD DETAILS

| | | |
|---|---|---|
| DESIGNED : D.O.H. & CONSULTANTS | CHECKED : | DATE JULY 1994 |
| SUBMITTED : (DIRECTOR OF LOCATION & DESIGN DIVISION) | | SCALE AS SHOWN |
| APPROVED : (DIRECTOR GENERAL) | | DWG. NO. RS-106 |
| | | SHEET NO. 23 |

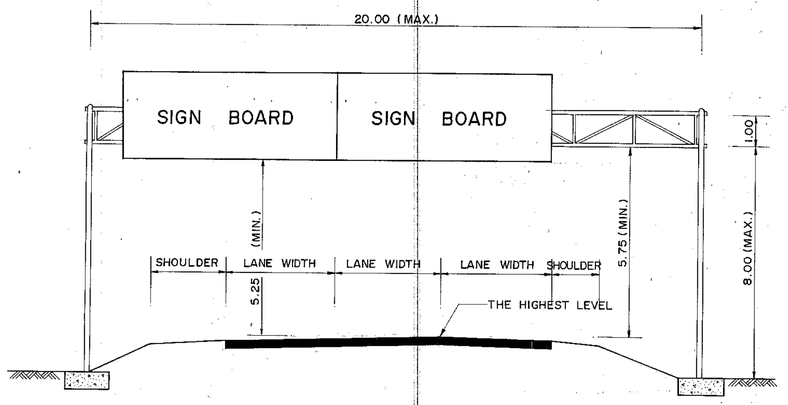


**FRONT ELEVATION**
SCALE 1 : 100

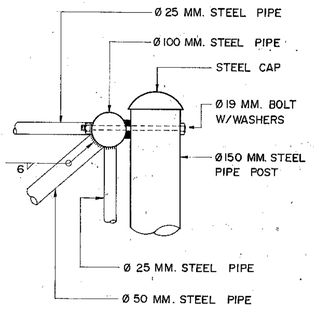


**SIDE VIEW**

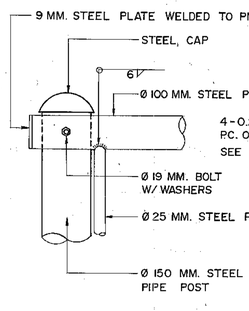


**FRONT VIEW**

**DETAIL "1"**
NOT TO SCALE

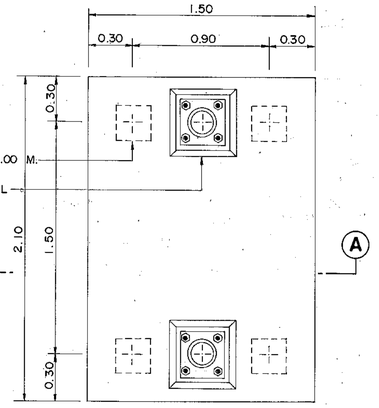


**FOOTING PLAN**
SCALE 1 : 20

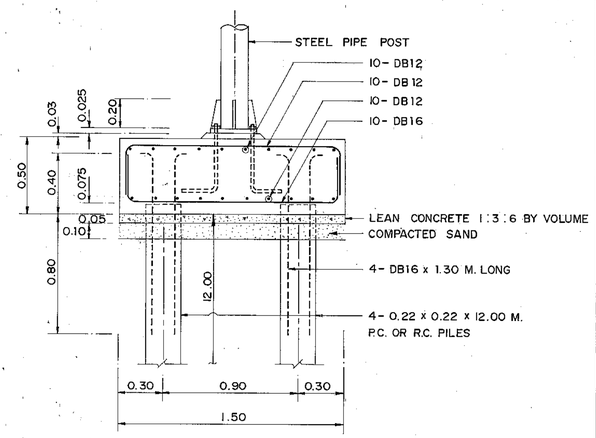


**SECTION (A)-(A)**
SCALE 1 : 20

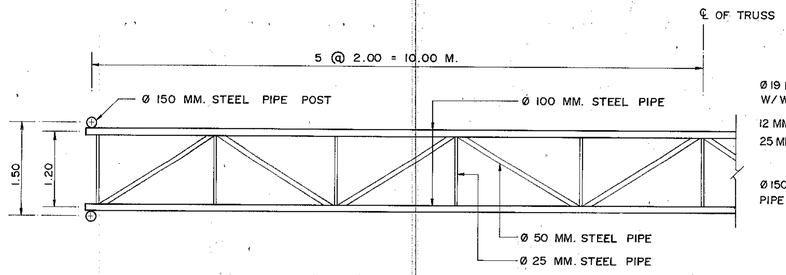


**TRUSS PLAN**
SCALE 1 : 50

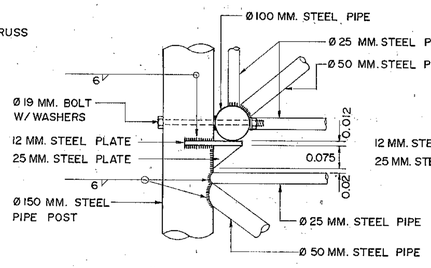


**SIDE VIEW**

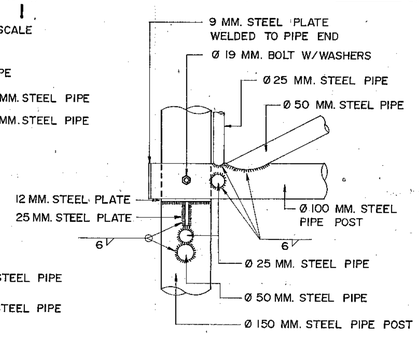


**FRONT VIEW**

**DETAIL "2"**
NOT TO SCALE

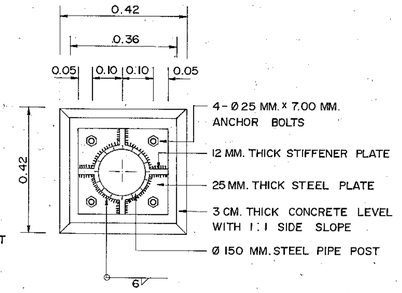


**BASE DETAIL**
SCALE 1 : 50

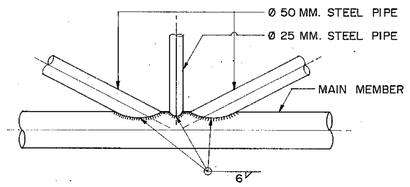


**JOINT DETAIL**
SCALE 1 : 10

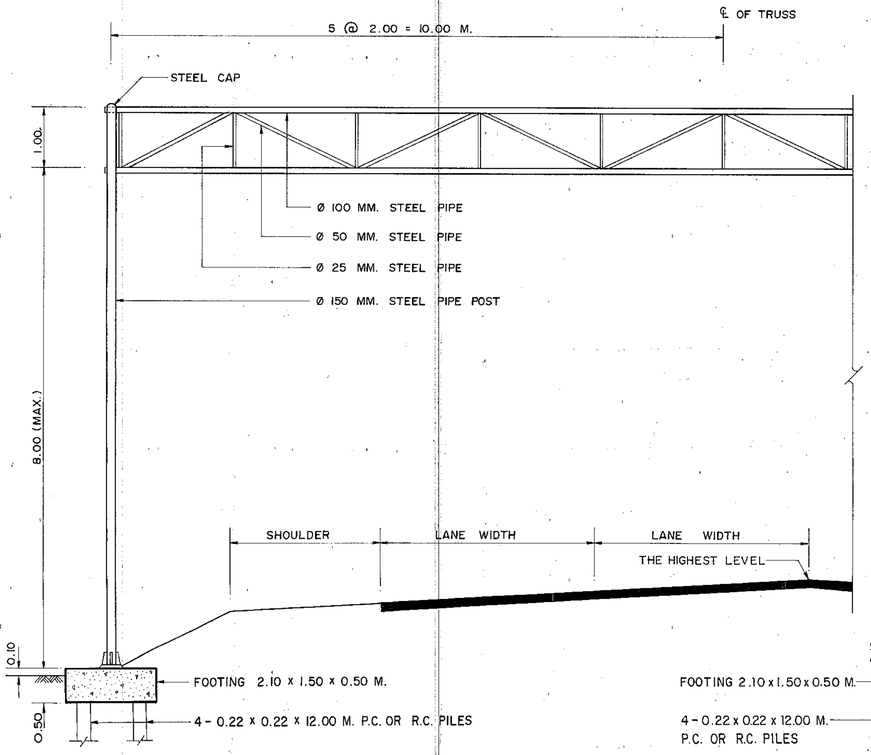


**FRONT ELEVATION**
SCALE 1 : 50

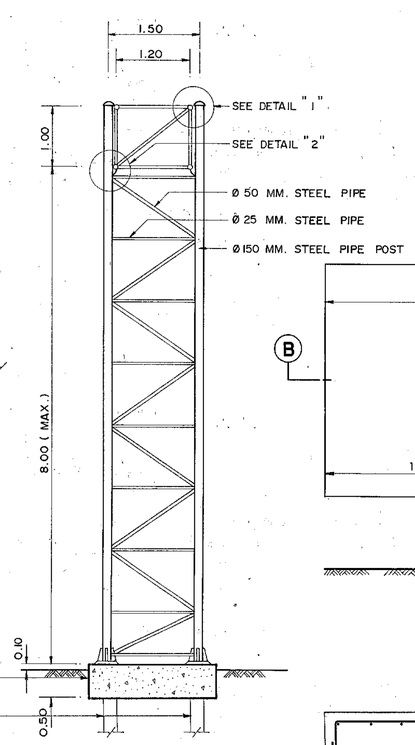


**SIDE ELEVATION**
SCALE 1 : 50

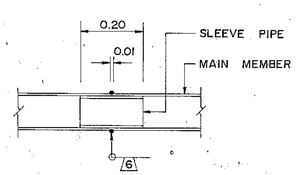


**PIPE CONNECTION DETAIL**
SCALE 1 : 10

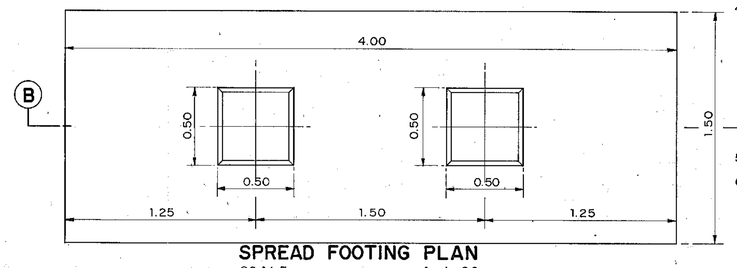


**SPREAD FOOTING PLAN**
SCALE 1 : 20

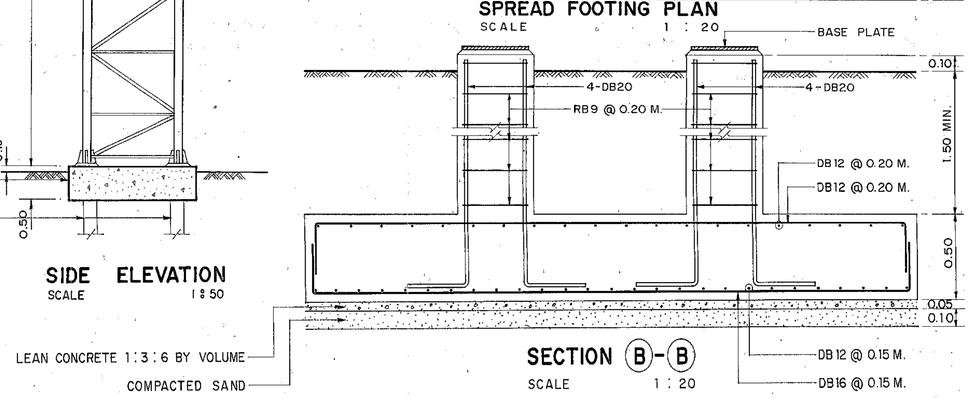


**SECTION (B)-(B)**
SCALE 1 : 20

## NOTES :

1. ALL DIMENSIONS ARE IN METERS EXCEPT WELDING SYMBOLS AND PIPE DIAMETER ARE IN MILLIMETERS UNLESS OTHERWISE INDICATED.
2. CONCRETE SHALL HAVE A MINIMUM ULTIMATE COMPRESSIVE STRENGTH OF 210 KSC. FOR 15x15x15 CM. CUBE AT 28 DAYS. AN APPROXIMATE MIX DESIGN PER CUBIC METER IS SUGGESTED AS FOLLOWS :

| | | |
|---|---|---|
| PORTLAND CEMENT TYPE I | 350 | KG. (MIN.) |
| SAND | 0.43 | $M^3$ |
| CRUSHED, ROCK OR GRAVEL | 0.86 | $M^3$ |
| CONCRETE SLUMP | 10 | CM. (MAX.) |

3. REINFORCING STEEL SHALL CONFORM TO TIS. 20 GRADE SR 24 FOR ROUND BARS AND TIS. 24 GRADE SD 30 FOR DEFORMED BARS.
4. ALL HOLLOW STEEL SECTIONS, STEEL PIPES SHALL CONFORM TO TIS. 107 GRADE HS 41
   FOR Ø 25 MM. STEEL PIPE WT. 1.99 Kg/M.
   Ø 50 MM. STEEL PIPE WT. 4.11 Kg/M.
   Ø 100 MM. STEEL PIPE WT. 9.83 Kg/M.
   Ø 150 MM. STEEL PIPE WT. 17.82 Kg/M.
5. VERTICAL PIPE POST SHALL BE CONNECTED AT UPPER PART.
6. ALL WELDING SHALL BE DONE WITH WELDING RODS WHICH CONFORM TO TIS. 49 TYPE E 4202 x 13.
7. ALL STEEL SHALL BE GALVANIZED. ZINC COATING SHALL NOT BE LESS THAN 550 GRAMS PER SQUARE METER.
8. SPREAD FOOTING SHALL BE USED FOR ALLOWABLE SOIL BEARING CAPACITY UNDER THE FOUNDATION MORE THAN 10 TON PER SQUARE METER.

# KINGDOM OF THAILAND
## MINISTRY OF TRANSPORT AND COMMUNICATIONS
## DEPARTMENT OF HIGHWAYS

STANDARD DRAWING

**STEEL FRAME FOR MOUNTING OVERHEAD SIGN TYPE I**
**SPAN 20.00 M. MAX.**

| | | |
|---|---|---|
| DESIGNED : D.O.H. & CONSULTANTS | CHECKED : | DATE JULY 1994 |
| SUBMITTED : (DIRECTOR OF LOCATION & DESIGN DIVISION) | | SCALE AS SHOWN |
| | | DWG. NO. RS-107 |
| APPROVED : (DIRECTOR GENERAL) | | SHEET NO. 24 |

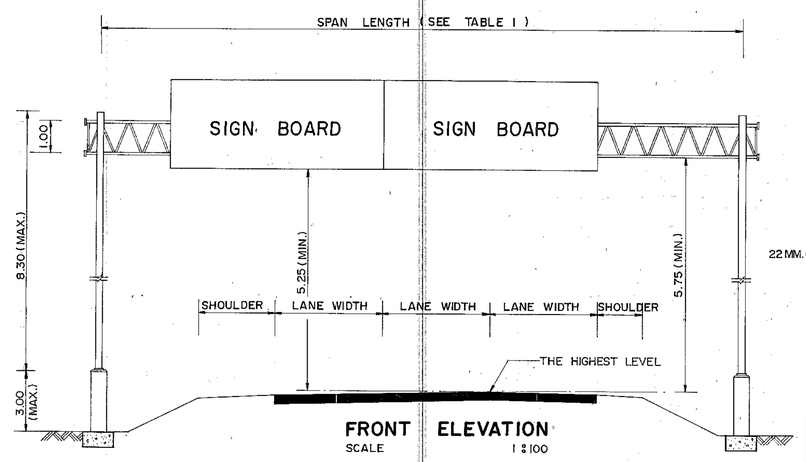


**FRONT ELEVATION**
SCALE 1 : 100

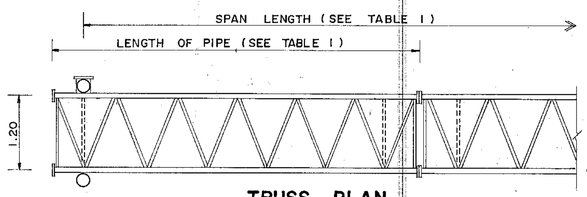


**TRUSS PLAN**
SCALE 1 : 50

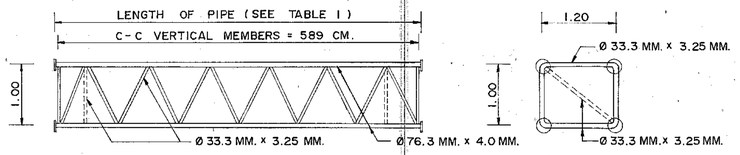


**DETAIL TRUSS MEMBER**
SCALE 1 : 50

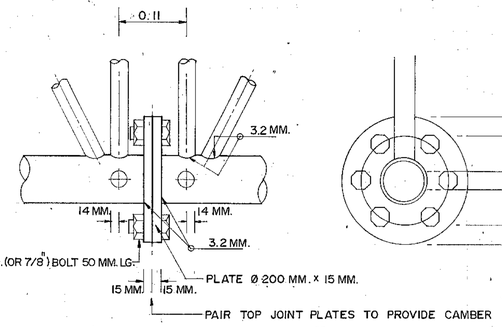


**DETAIL (A)**
SCALE 1 : 5

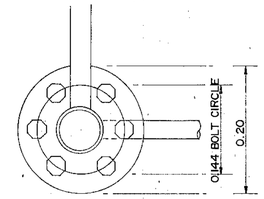


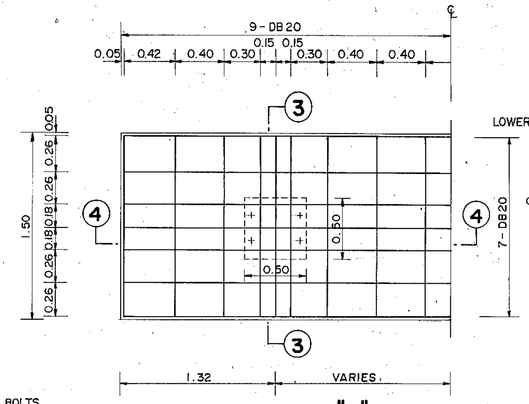


**FOOTING TYPE "B"**
SCALE 1 : 25

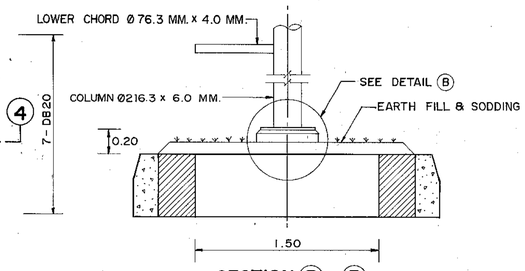


**SECTION (3) - (3)**
SCALE 1 : 25

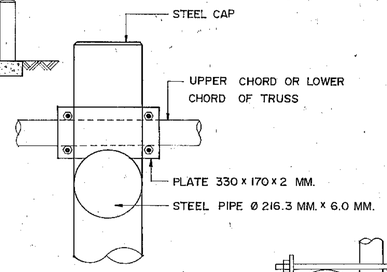


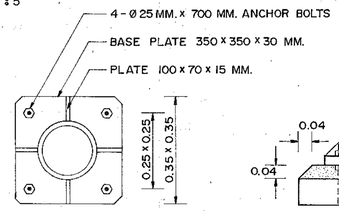


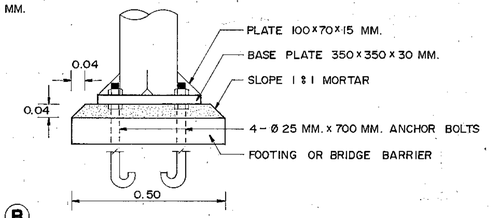


**DETAIL (B)**
SCALE 1 : 10

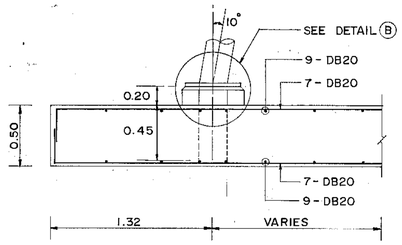


**SECTION (4) - (4)**
SCALE 1 : 25

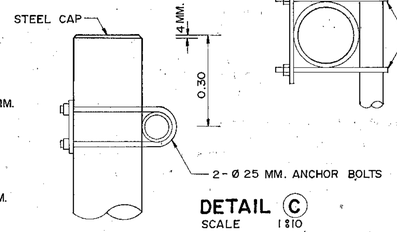


**DETAIL (C)**
SCALE 1 : 10

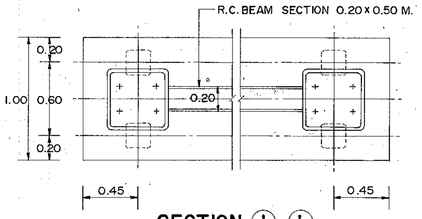


**SECTION (1) - (1)**
SCALE 1 : 25

## TABLE I

| NO. | SPAN LENGTH(M.) | LENGTH OF STEEL PIPE (M.) | SIZE OF STEEL PIPE |
|---|---|---|---|
| 1. | 17.00 | 6.00 + 6.00 + 6.00 = 18.00 | Ø 76.3 MM. WT. 5.71 KG/M. |
| 2. | 19.00 | 6.00 + 4.00 + 4.00 + 6.00 = 20.00 | Ø 76.3 MM. WT. 5.71 KG/M. |
| 3. | 21.00 | 6.00 + 5.00 + 5.00 + 6.00 = 22.00 | Ø 76.3 MM. WT. 5.71 KG/M. |
| 4. | 23.00 | 6.00 + 6.00 + 6.00 + 6.00 = 24.00 | Ø 76.3 MM. WT. 7.13 KG/M. |
| 5. | 25.00 | 6.00 + 6.00 + 2.00 + 6.00 + 6.00 = 26.00 | Ø 76.3 MM. WT. 7.13 KG/M. |
| 6. | 28.00 | 6.00 + 6.00 + 4.00 + 6.00 + 6.00 = 28.00 | Ø 89.1 MM. WT. 8.39 KG/M. |

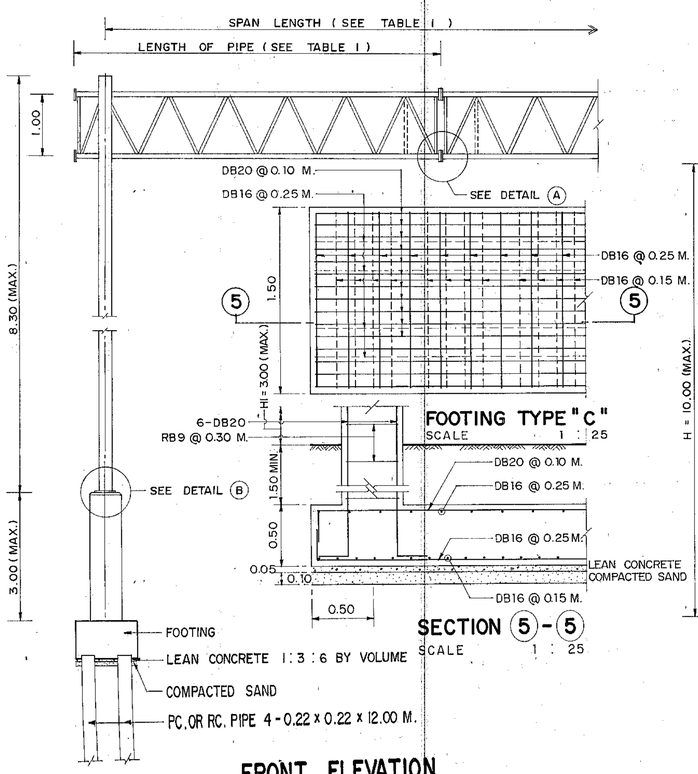


**FOOTING TYPE "C"**
SCALE 1 : 25

**FRONT ELEVATION**
SCALE 1 : 50

**SECTION (5) - (5)**
SCALE 1 : 25

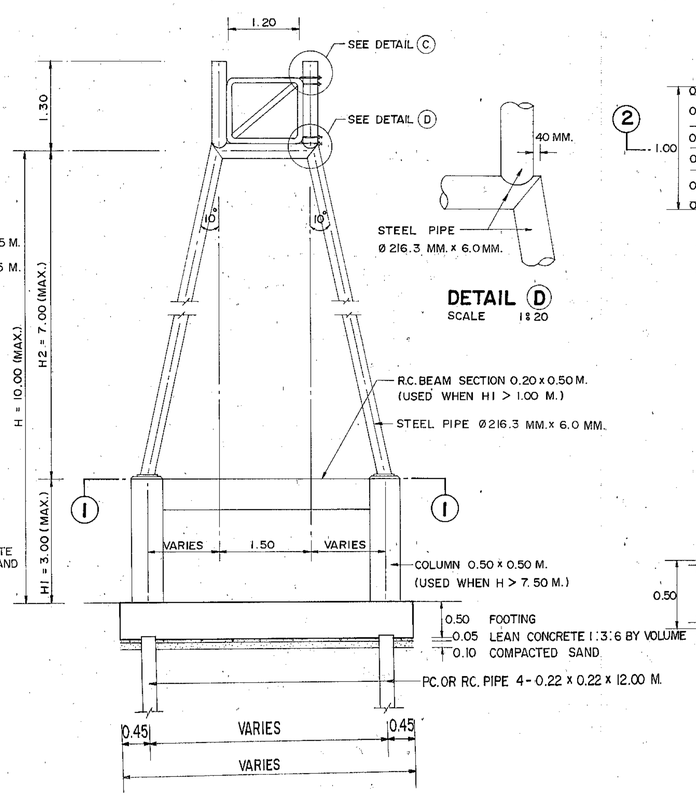


**SIDE ELEVATION**
SCALE 1 : 50




**DETAIL (D)**
SCALE 1 : 20

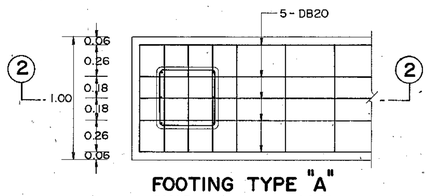


**FOOTING TYPE "A"**
SCALE 1 : 25

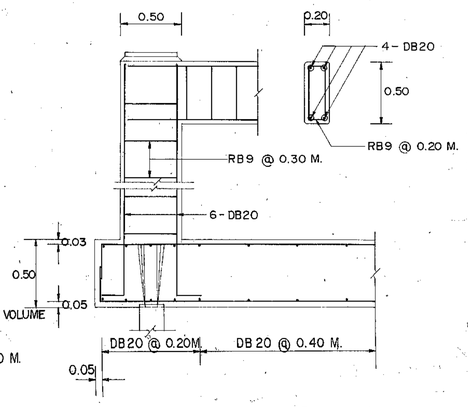


**SECTION (2) - (2)**
SCALE 1 : 25

## NOTES :

1. ALL DIMENSIONS ARE IN METERS UNLESS OTHERWISE INDICATED.
2. CONCRETE SHALL HAVE A MINIMUM ULTIMATE COMPRESSIVE STRENGTH OF 210 KSC. FOR 15 x 15 x 15 CM. CUBE AT 28 DAYS. AN APROXIMATE MIX DESIGN PER CUBIC METER IS SUGGESTED AS FOLLOW :

| | | |
|---|---|---|
| PORTLAND CEMENT TYPE I | 350 | KG. (MIN.) |
| SAND | 0.43 | $M^3$ |
| CRUSHED ROCK OR GRAVEL | 0.86 | $M^3$ |
| CONCRETE SLUMP | 10 | CM. (MAX.) |

3. REINFORCING STEEL SHALL CONFORM TO TIS. 20 GRADE SR 24 FOR ROUND BARS AND TIS. 24 GRADE SD 30 FOR DEFORMED BARS.
4. FOR STEEL COLUMN, AND CHORD SHALL BE STRUCTURAL STEEL CONFORM TO JIS. G3444 GRADE STK 41 OR EQUIVALENT.
5. DIAGONAL MEMBER STEEL PIPE SHALL CONFORM TO TIS. 26 CLASS 2.
6. JOINT OF MEMBER SHALL BE WELDED AROUND WITH 3.2 MM. FILLET WELD AS AISC SPECIFICATION.
7. ALL STEEL AND BOLT ASSEMBLY SHALL BE GALVANIZED. ZINC COATING SHALL NOT BE LESS THAN 550 GRAMS PER SQUARE METERS.
8. FOOTING TYPE "A" SHALL BE USED ON EXISTING GROUND OR SOFT CLAY AND TYPE "B" SHALL BE USED ON RAISED MEDIAN.
9. FOOTING TYPE "C" SHALL BE USED FOR ALLOWABLE SOIL BEARING CAPACITY UNDER THE FOUNDATION MORE THAN 10 TON. PER SQUARE METER.

**KINGDOM OF THAILAND**
**MINISTRY OF TRANSPORT AND COMMUNICATIONS**
**DEPARTMENT OF HIGHWAYS**

STANDARD DRAWING

STEEL FRAME FOR MOUNTING OVERHEAD SIGN TYPE II
SPAN 17.00 - 28.00 M.

| | | |
|---|---|---|
| DESIGNED : D.O.H. & CONSULTANTS | CHECKED : | DATE JULY 1994 |
| SUBMITTED : (DIRECTOR OF LOCATION & DESIGN DIVISION) | | SCALE AS SHOWN |
| APPROVED : (DIRECTOR GENERAL) | | DWG. NO. RS-108 |
| | | SHEET NO. 25 |

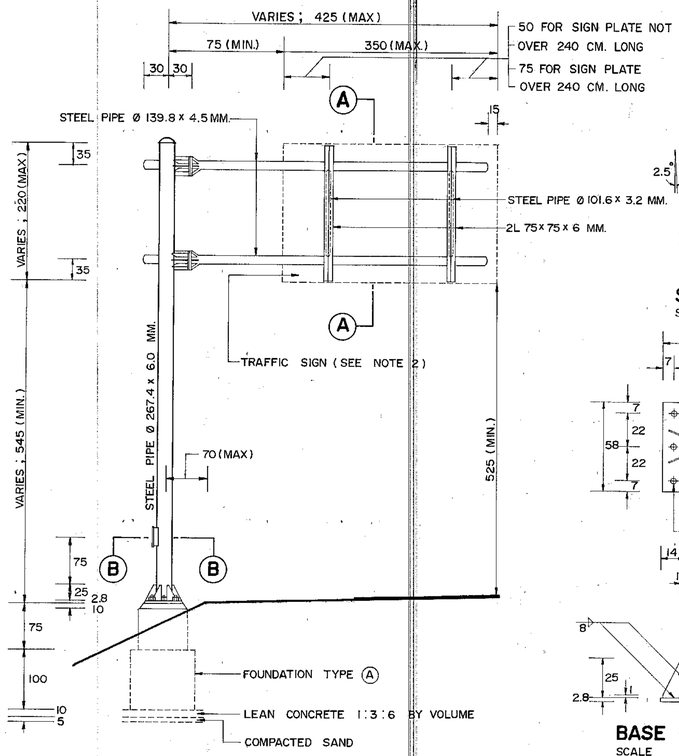


## STEEL POLE FOR OVERHANGING TRAFFIC SIGN TYPE I
SCALE 1 : 50

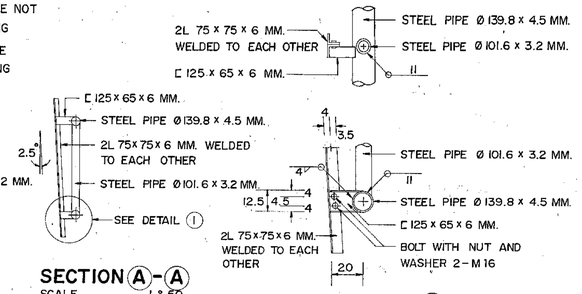


## SECTION (A) - (A)
SCALE 1 : 50

## DETAIL (I)
SCALE 1 : 20

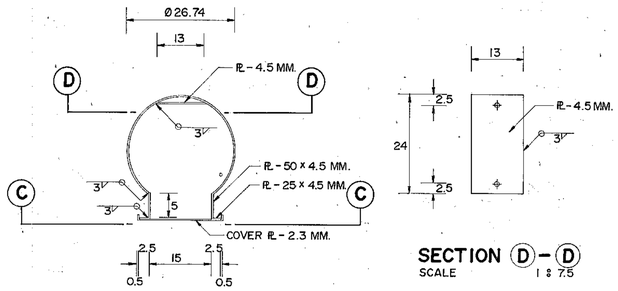


## SECTION (B) - (B)
SCALE 1 : 7.5




## SECTION (D) - (D)
SCALE 1 : 7.5

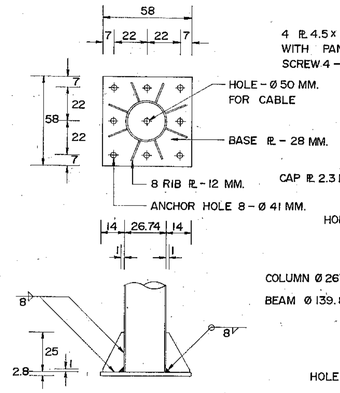


## BASE OF STEEL POLE
SCALE 1 : 20

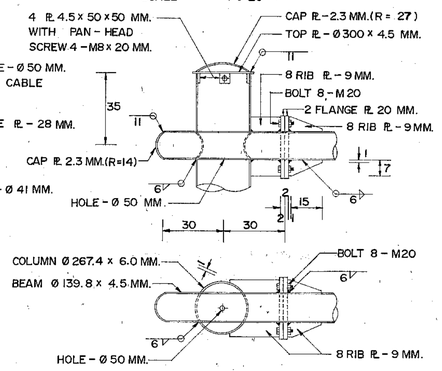


## TOP OF STEEL POLE AND JOINT DETAIL
SCALE 1 : 15

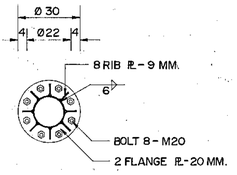


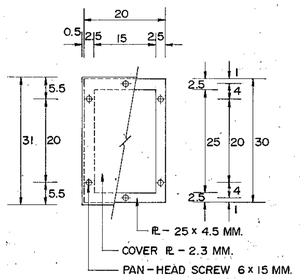


## SECTION (C) - (C)
SCALE 1 : 7.5

## NOTES :

1. DIMENSIONS FOR WELDING SYMBOLS ARE IN MILLIMETERS, ALL OTHER DIMENSIONS ARE IN CENTIMETERS UNLESS OTHERWISE INDICATED.
2. THIS DRAWING SHALL BE USED FOR TRAFFIC SIGNS, WHERE THE AREA OF THE SIGN INCLUDING THE GAPS BETWEEN PLATES IS NOT MORE THAN 52,800 SQ.CM. THE MAXIMUM LENGTH AND WIDTH OF THE SIGN SHALL NOT EXCEED 350 CM. AND 220 CM. RESPECTIVELY.
3. THE FOUNDATION TYPE (A) SHALL BE USED IN A SIDE SLOPE AREA AND FOUNDATION TYPE (B) SHALL BE USED IN A SIDEWALK OR RAISED MEDIAN.
4. THE ALLOWABLE SOIL BEARING CAPACITY UNDER THE FOUNDATION TYPE (A) SHALL BE MORE THAN 5 TONS PER SQ.M. EMBANKMENT AROUND FOUNDATION TYPE (B) SHALL BE COMPACTED TO 90 % OF THE MAXIMUM STANDARD DRY DENSITY.
5. THE DIMENSIONS OF STEEL PIPE SHOWN ARE THE OUTER DIAMETER AND THE THICKNESS OF THE PIPE FOR EXAMPLE ; Ø 267.4 x 6.0 MM. MEANS THE OUTER DIAMETER OF THE PIPE IS 267.4 MM. AND THE THICKNESS IS 6.0 MM.
6. STEEL PIPE SHALL CONFORM TO ONE OF THE FOLLOWING SPECIFICATIONS
   - 6.1 TIS.107 GRADE HS 41
   - 6.2 JIS. G3444 GRADE STK 41
   - 6.3 ASTM. A252 - 75 GRADE 2
7. STRUCTURAL STEEL SECTION SHALL CONFORM TO TIS 116 GRADE Fe 24.
8. STEEL PIPE, STRUCTURAL STEEL SECTION, STEEL PLATE, BOLTS, NUTS, AND WASHERS SHALL BE GALVANIZED. ZINC COATING SHALL NOT BE LESS THAN 550 GRAMS PER SQUARE METER.
9. ELECTRIC ARC WELDING WHICH CONFORMS TO AISC STANDARD SHALL BE USED FOR WELDING STEEL.
10. CONCRETE SHALL HAVE A MINIMUM ULTIMATE COMPRESSIVE STRENGTH OF 210 KSC. FOR 15 x 15 x 15 CM. CUBE AT 28 DAYS. AN APPROXIMATE MIX DESIGN PER CUBIC METER IS SUGGESTED AS FOLLOWS :

| | | |
|---|---|---|
| PORTLAND CEMENT TYPE 1. | 350 | KG. (MIN.) |
| SAND | 0.43 | $M^3$ |
| CRUSHED ROCK OR GRAVEL | 0.86 | $M^3$ |
| CONCRETE SLUMP | 10 | CM. (MAX.) |

11. MORTAR SHALL BE COMPRISED OF PORTLAND CEMENT AND SAND IN THE PROPORTION 1 TO 1
12. REINFORCING STEEL SHALL CONFORM TO TIS.20 GRADE SR 24 FOR ROUND BARS AND TIS. 24 GRADE SD 30 FOR DEFORMED BARS.
13. CANTILEVER BEAM SHALL BE INSTALLED PERPENDICULAR TO THE ROADWAY ALIGNMENT. CAMBER SHALL BE PROVIDED FOR BEAM DEFLECTION.
14. WHERE SIGN LIGHTING IS REQUIRED, THE ELECTRICAL COMPONENTS SHALL CONFORM TO THE ELECTRICITY SUPPLY AUTHORITY'S REQUIREMENTS AND REGULATIONS.

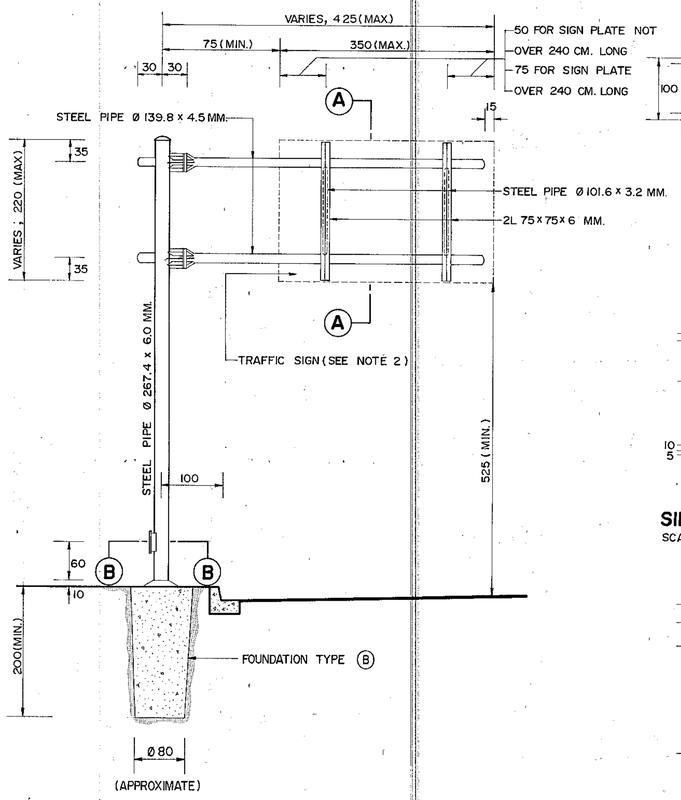


## STEEL POLE FOR OVERHANGING TRAFFIC SIGN TYPE II
SCALE 1 : 50

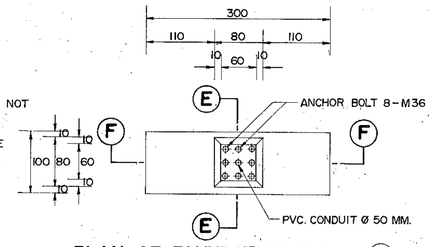


## PLAN OF FOUNDATION TYPE (A)
SCALE 1 : 50

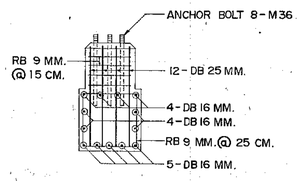


## SECTION (E) - (E)
SCALE 1 : 50

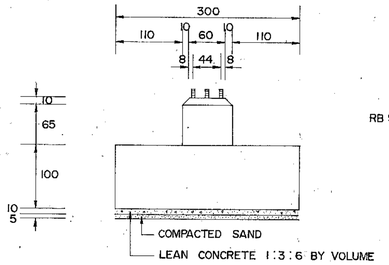


## SIDE ELEVATION OF FOUNDATION TYPE (A)
SCALE 1 : 50

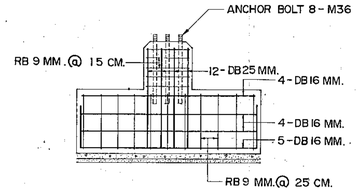


## SECTION (F) - (F)
SCALE 1 : 50

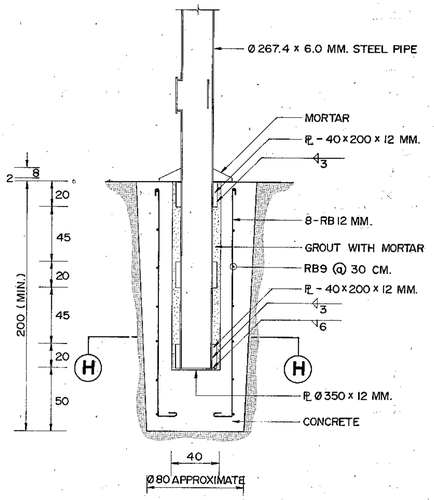


## FOUNDATION TYPE (B)
SCALE 1 : 25

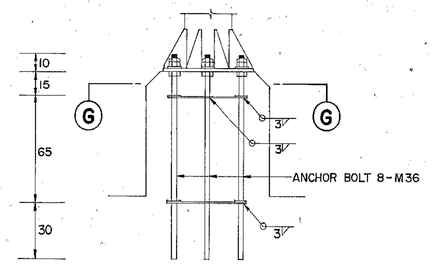


## ANCHOR BOLT DETAIL
SCALE 1 : 20

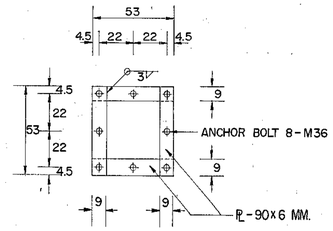


## SECTION (G) - (G)
SCALE 1 : 20

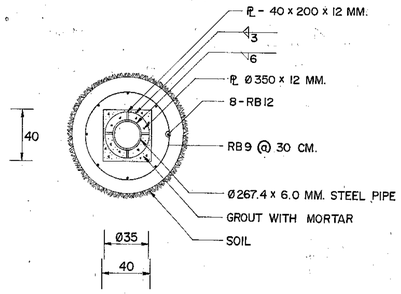


## SECTION (H) - (H)
SCALE 1 : 25

# KINGDOM OF THAILAND
MINISTRY OF TRANSPORT AND COMMUNICATIONS
DEPARTMENT OF HIGHWAYS

STANDARD DRAWING

STEEL POLE FOR OVERHANGING TRAFFIC SIGN FOR SIGN PLATES NOT MORE THAN 52,800 SQ.CM.

| | | |
|---|---|---|
| DESIGNED : D.O.H. & CONSULTANTS | CHECKED : | DATE JULY 1994 |
| SUBMITTED : (DIRECTOR OF LOCATION & DESIGN DIVISION) | | SCALE AS SHOWN |
| APPROVED : (DIRECTOR GENERAL) | | DWG. NO. RS-109 |
| | | SHEET NO. 26 |

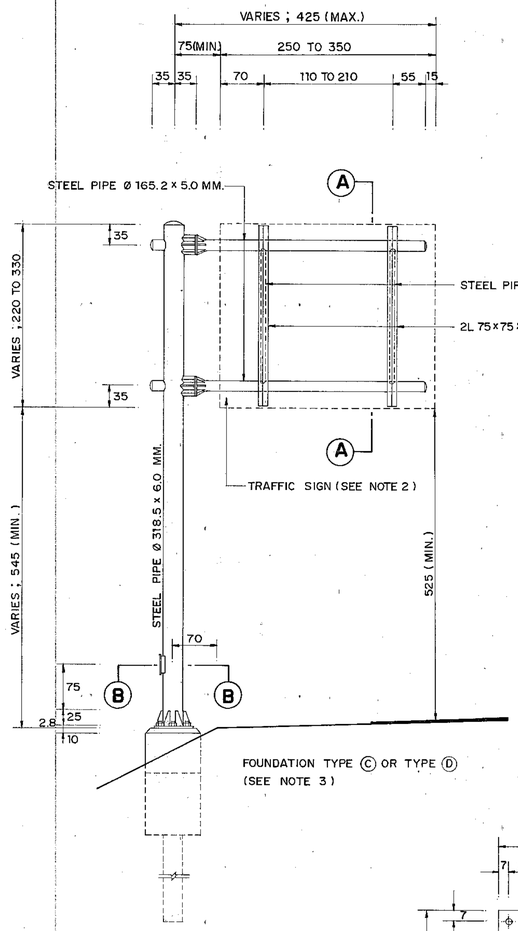


## STEEL POLE FOR OVERHANG TRAFFIC SIGN TYPE 3 AT SIDE SLOPE

SCALE 1 : 50

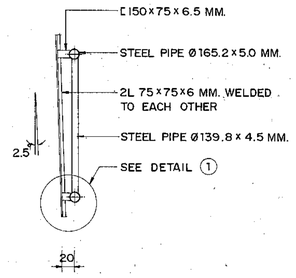


## SECTION A - A

SCALE 1 : 50

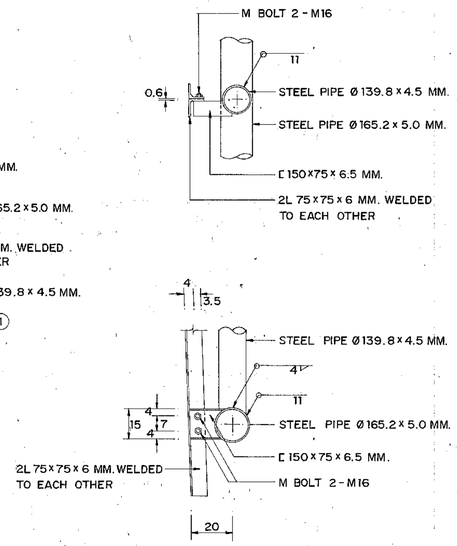


## DETAIL 1

SCALE 1 : 15

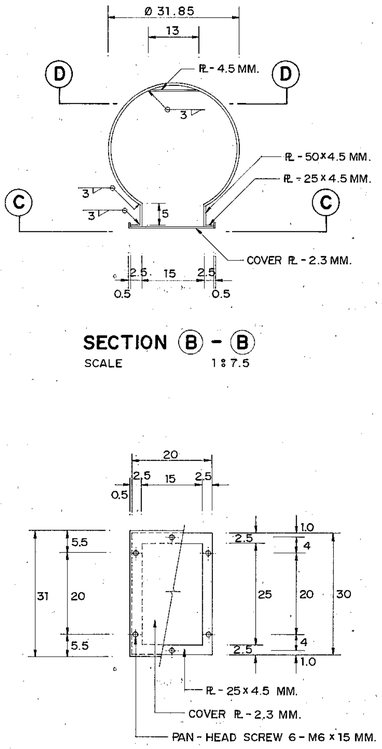


## SECTION B - B

SCALE 1 : 7.5

## SECTION C - C

SCALE 1 : 7.5

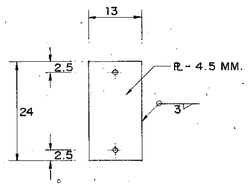


## SECTION D - D

SCALE 1 : 7.5

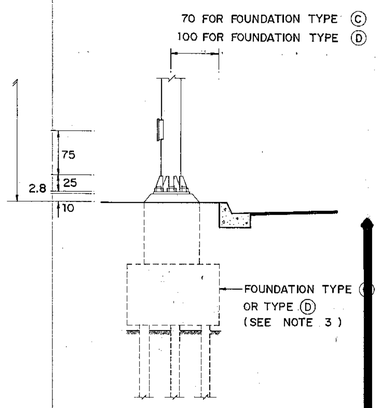


## STEEL POLE FOR OVERHANG TRAFFIC SIGN TYPE 3 AT SIDEWALK OR RAISED MEDIAN

SCALE 1 : 50

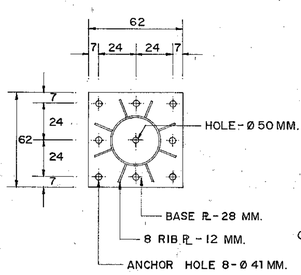


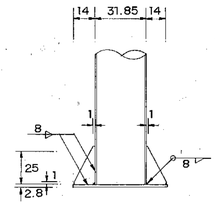


## BASE OF STEEL POLE

SCALE 1 : 20

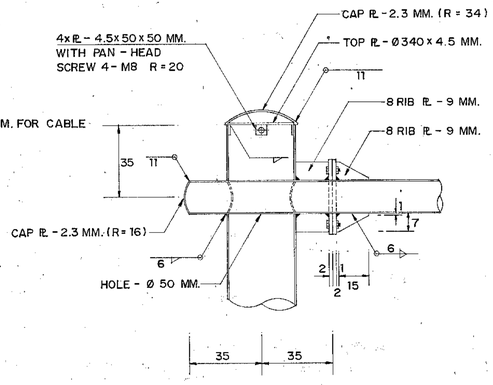


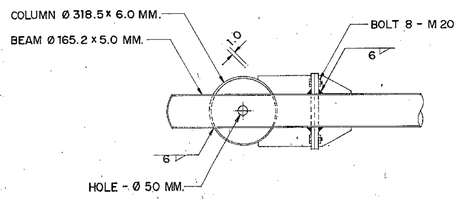


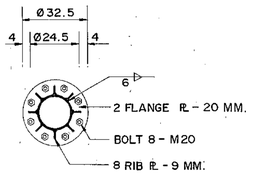


## TOP OF STEEL POLE AND JOINT DETAIL

SCALE 1 : 15

## NOTES :

1. DIMENSIONS FOR WELDING SYMBOLS ARE IN MILLIMETERS, ALL OTHER DIMENSIONS ARE IN CENTIMETERS UNLESS OTHERWISE INDICATED.
2. THIS DRAWING SHALL BE USED FOR TRAFFIC SIGNS, WHERE THE AREA OF THE SIGN IS NOT MORE THAN 108,000 SQ.CM. THE MAXIMUM LENGTH AND WIDTH OF THE SIGN SHALL NOT EXCEED 350 CM. AND 330 RESPECTIVELY.
3. GENERALLY, THE FOUNDATION SHALL BE TYPE C OR TYPE D. IN CASE OF THE PILES SHALL NOT BE DRIVEN TO THE SOIL OR THE ALLOWABLE SOIL BEARING CAPACITY UNDER THE FOUNDATION MORE THAN 10 TON PER SQUARE METER, THE FOUNDATION TYPE D WITH NO PILES SHALL BE USED.
4. THE DIMENSIONS OF STEEL PIPE SHOWN ARE THE OUTER DIAMETER AND THE THICKNESS OF THE PIPE FOR EXAMPLE ; Ø 318.5 x 6.0 MM. MEANS THE OUTER DIAMETER OF THE PIPE IS 318.5 MM. AND THE THICKNESS IS 6.0 MM.
5. STEEL PIPE SHALL CONFORM TO ONE OF THE FOLLOWING SPECIFICATIONS
   - 5.1 TIS. 107 GRADE HS41
   - 5.2 JIS. G3444 GRADE STK41
   - 5.3 ASTM. A252-75 GRADE 2
6. STRUCTURAL STEEL SECTION SHALL CONFORM TO TIS. 116 GRADE Fe 24.
7. STEEL PIPE, STRUCTURAL STEEL SECTION, STEEL PLATE, BOLTS, NUTS AND WASHERS SHALL BE GALVANIZED. ZINC COATING SHALL NOT BE LESS THAN 550 GRAMS PER SQUARE METER.
8. ELETRIC ARC WELDING WHICH CONFORMS TO AISC STANDARD SHALL BE USED FOR WELDING STEEL.
9. CONCRETE FOR REINFORCED CONCRETE PILE SHALL HAVE A MINIMUM ULTIMATE COMPRESSIVE STRENGTH OF 300 KSC. FOR 15 x 15 x 15 CM. CUBE AT 28 DAYS. AN APPROXIMATE MIX DESIGN PER CUBIC METER IS SUGGESTED AS FOLLOWS ;

| | | |
|---|---|---|
| PORTLAND CEMENT TYPE 1 | 375 | KG. (MIN.) |
| SAND | 0.43 | $M^3$ |
| CRUSHED ROCK OR GRAVEL | 0.86 | $M^3$ |
| CONCRETE SLUMP | 10 | CM. (MAX.) |

10. CONCRETE FOR PRESTRESS CONCRETE PILE SHALL HAVE A MINIMUM ULTIMATE COMPRESSIVE STRENGTH OF 440 KSC. FOR 15 x 15 x 15 CM. CUBE AT 28 DAYS. AN APPROXIMATE MIX DESIGN PER CUBIC METER IS SUGGESTED AS FOLLOW ;

| | | |
|---|---|---|
| PORTLAND CEMENT TYPE 1 | 375 | KG. (MIN.) |
| SAND | 0.43 | $M^3$ |
| CRUSHED ROCK OR GRAVEL | 0.86 | $M^3$ |
| CONCRETE SLUMP | 8 | CM. (MAX.) |

11. CONCRETE FOR FOUNDATION SHALL HAVE A MINIMUM ULTIMATE COMPRESSIVE STRENGTH OF 210 KSC. FOR 15 x 15 x 15 CM. CUBE AT 28 DAYS. AN APPROXIMATE MIX DESIGN PER CUBIC METER IS SUGGESTED AS FOLLOW ;

| | | |
|---|---|---|
| PORTLAND CEMENT TYPE 1 | 350 | KG. (MIN.) |
| SAND | 0.43 | $M^3$ |
| CRUSHED ROCK OR GRAVEL | 0.86 | $M^3$ |
| CONCRETE SLUMP | 10 | CM. (MAX.) |

12. REINFORCING STEEL SHALL CONFORM TO TIS. 20 GRADE SR 24 FOR ROUND BARS AND TIS. 24 GRADE SD 30 FOR DEFORMED BARS.
13. PRESTRESSING WIRE SHALL CONFORM TO TIS. 95.
14. NORMAL CLEAR CONCRETE COVER SHALL BE 5 CM. BUT FOR FOUNDATION SHALL BE 7.5 CM., UNLESS OTHERWISE INDICATED.
15. CANTILEVER BEAM SHALL BE INSTALLED PERPENDICULAR TO THE ROADWAY ALIGNMENT. CAMBER SHALL BE PROVIDED FOR BEAM DEFLECTION.
16. WHERE SIGN LIGHTING IS REQUIRED, THE ELECTRICAL COMPONENTS SHALL CONFORM TO THE ELECTRICITY SUPPLY AUTHORITY'S REQUIREMENTS AND REGULATIONS.
17. THIS DRAWING SHALL BE USED IN COMBINATION WITH DWG. NO. RS-111.

# KINGDOM OF THAILAND

MINISTRY OF TRANSPORT AND COMMUNICATIONS
DEPARTMENT OF HIGHWAYS

STANDARD DRAWING

STEEL POLE FOR OVERHANGING TRAFFIC SIGN FOR SIGN PLATES NOT MORE THAN 108,000 SQ.CM. - I

| | | |
|---|---|---|
| DESIGNED : D.O.H. & CONSULTANTS | CHECKED : | DATE JULY 1994 |
| SUBMITTED : (DIRECTOR OF LOCATION & DESIGN DIVISION) | | SCALE AS SHOWN |
| APPROVED : (DIRECTOR GENERAL) | | DWG. NO. RS-110 |
| | | SHEET NO. 27 |

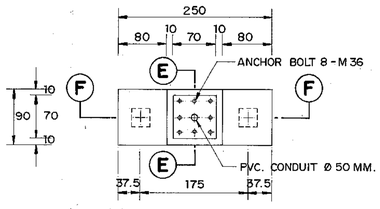


## PLAN OF FOUNDATION TYPE (C)
SCALE 1 : 50

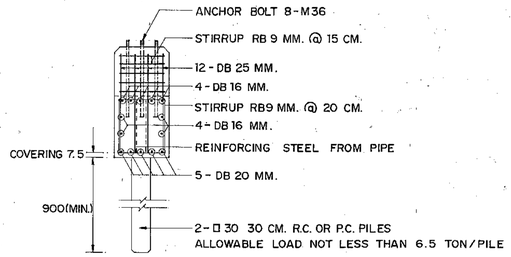


## SECTION (E) - (E)
SCALE 1 : 50

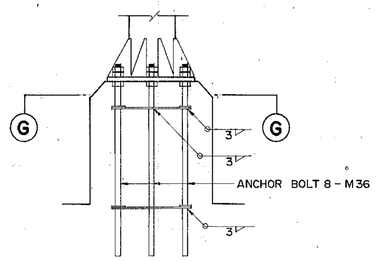


## ANCHOR BOLT DETAIL
SCALE 1 : 20

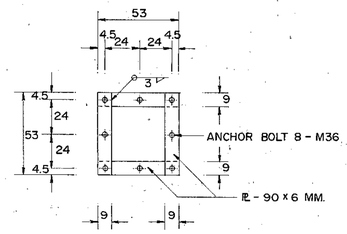


## SECTION (G) - (G)
SCALE 1 : 20

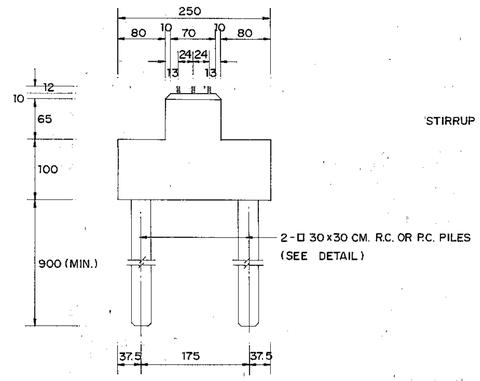


## SIDE ELEVATION OF FOUNDATION TYPE (C)
SCALE 1 : 50

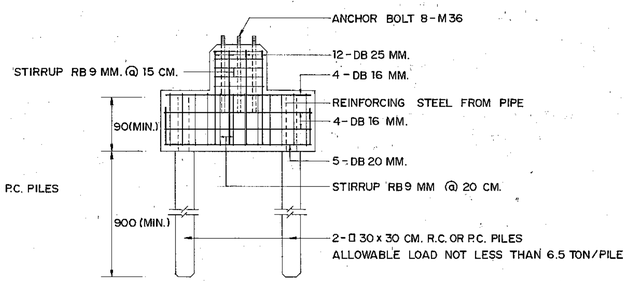


## SECTION (F) - (F)
SCALE 1 : 50

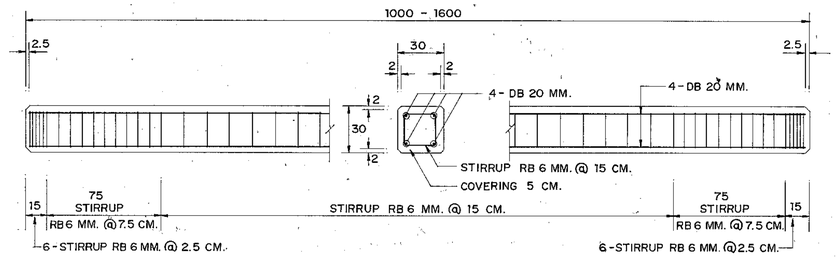


## 30 x 30 CM. REINFORCED CONCRETE PILE
SCALE 1 : 20

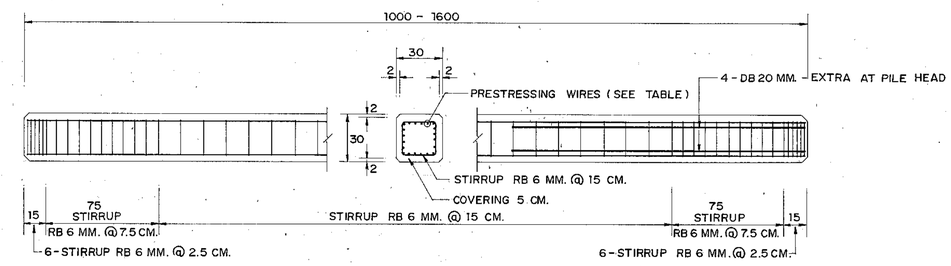


## 30 x 30 CM. PRESTRESSED CONCRETE PILE
SCALE 1 : 20

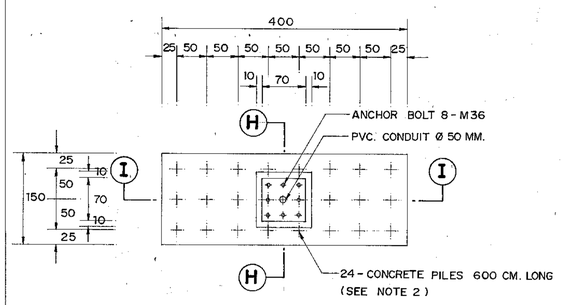


## PLAN OF FOUNDATION TYPE (D)
SCALE 1 : 50

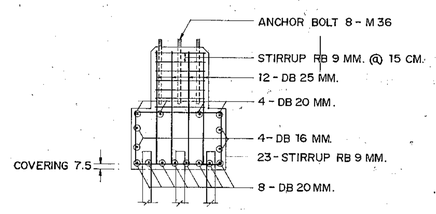


## SECTION (H) - (H)
SCALE 1 : 50

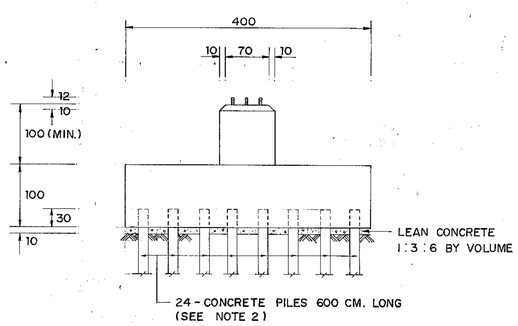


## SIDE ELEVATION OF FOUNDATION TYPE (D)
SCALE 1 : 50

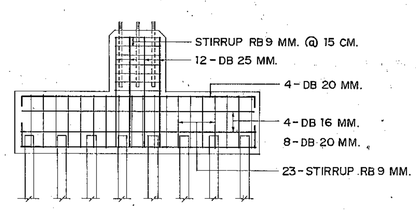


## SECTION (I) - (I)
SCALE 1 : 50

## TABLE OF PRESTRESSING WIRES

| AMOUNT AND DIMETER | ARRANGEMENT |
|---|---|
| 28 - Ø 4 MM. | 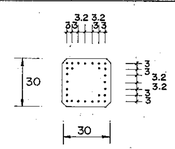 |
| 18 - Ø 5 MM. | 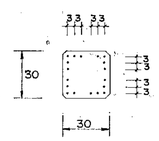 |
| 9 - Ø 7 MM. | 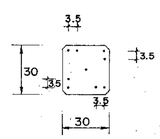 |

## NOTES :

1. ALL DIMENSIONS ARE IN CENTIMETERS UNLESS OTHERWISE INDICATED.
2. PRE - CAST CONCRETE PILES 600 CM. LONG WITH CIRCULAR, HEXAGON, OCTAGON, SQUARE OR I - SHAPE SECTIONS WHICH CONFORMING TO TIS. 395 OR TIS. 396 OR TIS. 397 OR TIS. 398 SHALL BE USED AS APPROVED BY THE ENGINEER.
3. IN CASE OF FOUNDATION ARE NOT CONSTRUCTED AS SPECIFIED IN THIS DRAWING, THE CONTRACTOR SHALL BE RESPONSIBLE FOR ADAPTATION TO CONSTRUCTION AS APPROVED BY THE ENGINEER.
4. THIS DRAWING SHALL BE USED IN COMBINATION WITH DWG. NO. RS-110.

# KINGDOM OF THAILAND
MINISTRY OF TRANSPORT AND COMMUNICATIONS
DEPARTMENT OF HIGHWAYS

STANDARD DRAWING

STEEL POLE FOR OVERHANGING TRAFFIC SIGN
FOR SIGN PLATE NOT MORE THAN 108,000 SQ.CM. - II

| | | |
|---|---|---|
| DESIGNED : D.O.H. & CONSULTANTS | CHECKED : | DATE JULY 1994 |
| SUBMITTED : (DIRECTOR OF LOCATION & DESIGN DIVISION) | | SCALE AS SHOWN |
| | | DWG. NO. RS-111 |
| APPROVED : (DIRECTOR GENERAL) | | SHEET NO. 28 |

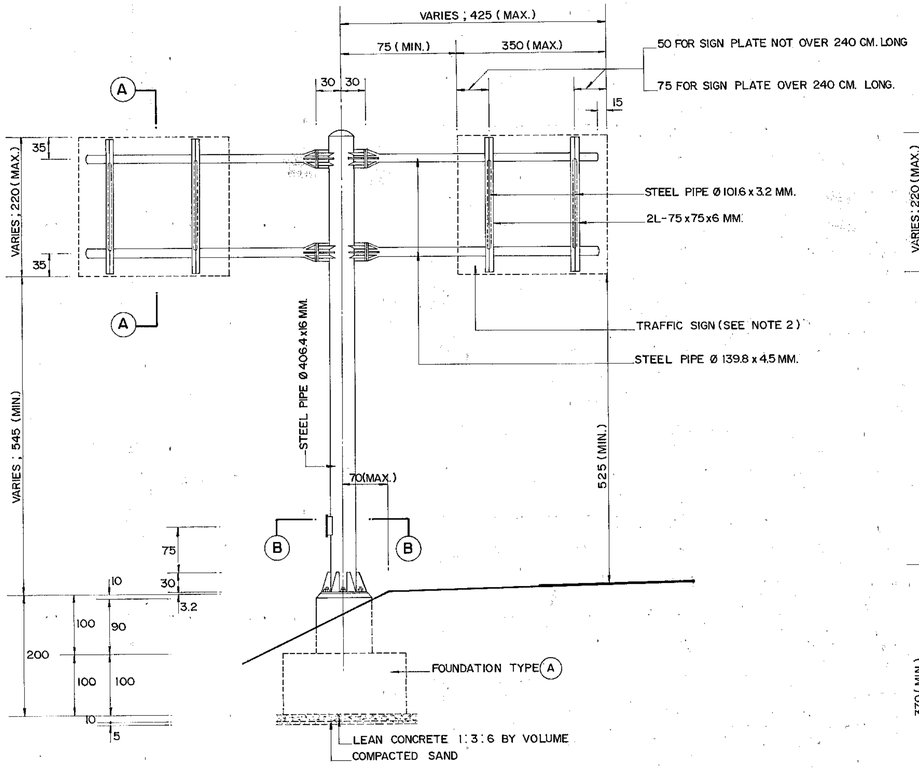


## STEEL POLE FOR OVERHANGING TRAFFIC SIGN TYPE I

SCALE 1 : 50

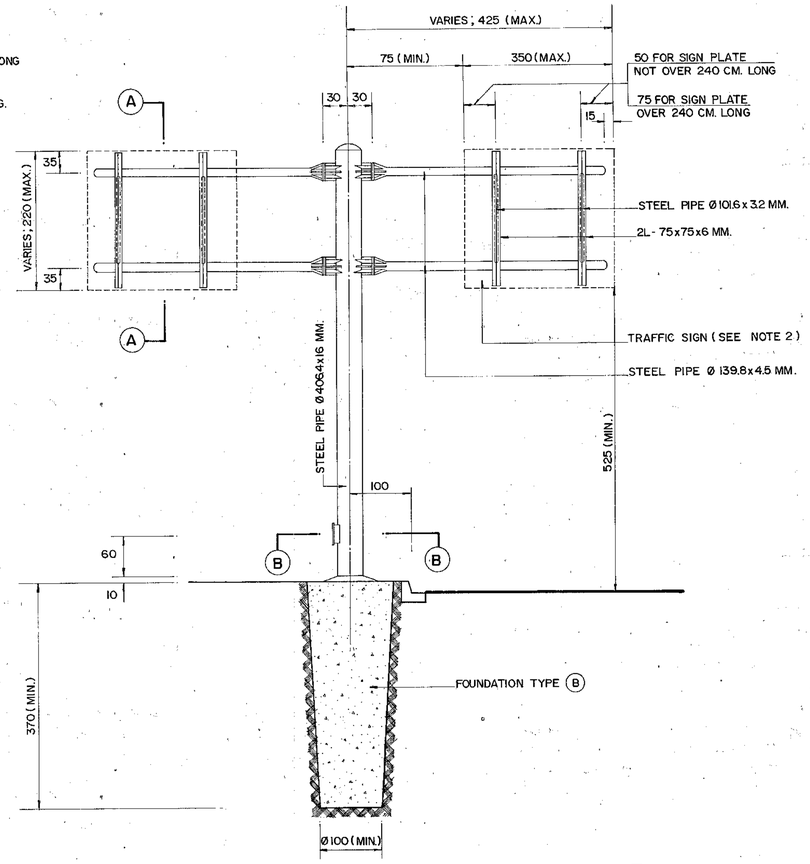


## STEEL POLE FOR OVERHANGING TRAFFIC SIGN TYPE II

SCALE 1 : 50

## NOTES :

1. DIMENSIONS FOR WELDING SYMBOLS ARE IN MILLIMETERS, ALL OTHER DIMENSIONS ARE IN CENTIMETERS UNLESS OTHERWISE INDICATED.
2. THIS DRAWING SHALL BE USED FOR TRAFFIC SIGNS. WHERE THE AREA OF THE SIGN INCLUDING THE GAPS BETWEEN PLATES IS NOT MORE THAN 2 x 52,800 SQ.CM. THE MAXIMUM LENGTH AND WIDTH OF THE SIGN SHALL NOT EXCEED 350 CM. AND 220 CM. RESPECTIVELY.
3. THE FOUNDATION TYPE (A) SHALL BE USED IN A SIDE SLOPE AREA AND FOUNDATION TYPE (B) SHALL BE USED IN A SIDEWALK OR RAISED MEDIAN.
4. THE ALLOWABLE SOIL BEARING CAPACITY UNDER THE FOUNDATION TYPE (A) SHALL BE MORE THAN 5 TONS PER SQ.M. EMBANKMENT AROUND FOUNDATION TYPE (B) SHALL BE COMPACTED TO 90% OF THE MAXIMUM STANDARD DRY DENSITY.
5. THE DIMENSIONS OF STEEL PIPE SHOWN ARE THE OUTER DIAMETER AND THE THICKNESS OF THE PIPE. FOR EXAMPLE : Ø 406.4 x 16 MM. MEANS THE OUTER DIAMETER OF THE PIPE IS 406.4 MM. AND THE THICKNESS IS 16.0 MM.
6. STEEL PIPE SHALL CONFORM TO ONE OF THE FOLLOWING SPECIFICATIONS.
   - 5.1 TIS. 107 - 2517 GRADE HS 41
   - 5.2 JIS. G3444 GRADE STK 41
   - 5.3 ASTM. A 252-75 GRADE 2
7. STRUCTURAL STEEL SECTION SHALL CONFORM TO TIS 116 GRADE Fe 24.
8. STEEL PIPE, STRUCTURAL STEEL SECTION, STEEL PLATE, BOLTS, NUTS AND WASHERS SHALL BE GALVANIZED ZINC COATING SHALL NOT BE LESS THAN 550 GRAMS PER SQUARE METER.
9. ELECTRIC ARC WELDING WHICH CONFORMS TO AISC STANDARD SHALL BE USED FOR WELDING STEEL.
10. CONCRETE SHALL HAVE A MINIMUM ULTIMATE COMPRESSIVE STRENGTH OF 210 KSC. FOR 15x15x15 CM. CUBE AT 28 DAYS. AN APPROXIMATE MIX DESIGN PER CUBIC METER IS SUGGESTED AS FOLLOW :

| | | |
|---|---|---|
| PORTLAND CEMENT TYPE I | 350 | KG. ( MIN.) |
| SAND | 0.43 | $M^3$ |
| CRUSHED ROCK OR GRAVEL | 0.86 | $M^3$ |
| CONCRETE SLUMP | 10 | CM. (MAX.) |

11. MORTAR SHALL BE COMPRISED OF PORTLAND CEMENT AND SAND IN THE PROPORTION 1 TO 1.
12. REINFORCING STEEL SHALL CONFORM TO TIS. 20 GRADE SR 24 FOR ROUND BAR AND TIS. 24 GRADE SD 30 FOR DEFORMED BARS.
13. CANTILEVER BEAM SHALL BE INSTALLED PERPENDICULAR TO THE ROADWAY ALIGNMENT. CAMBER SHALL BE PROVIDED, FOR BEAM DEFLECTION.
14. WHERE SIGN LIGHTING IS REQUIRED, THE ELECTRICAL COMPONENTS SHALL CONFORM TO THE ELECTRICITY SUPPLY AUTHORITY'S REQUIREMENTS AND REGULATIONS.
15. THIS DRAWING SHALL BE USED IN COMBINATION WITH DWG. NO. RS-113.

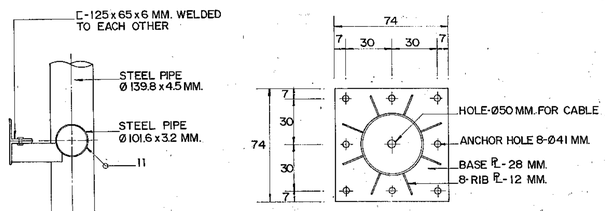


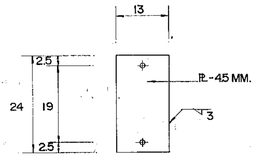


SECTION (D)-(D)
SCALE 1 : 7.5

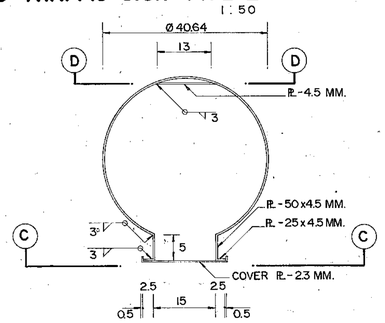


SECTION (B)-(B)
SCALE 1 : 7.5

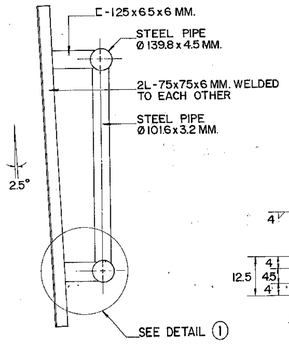


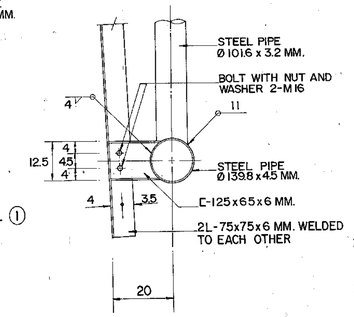


SECTION (A)-(A)
SCALE 1 : 20

DETAILS (1)
SCALE 1 : 10

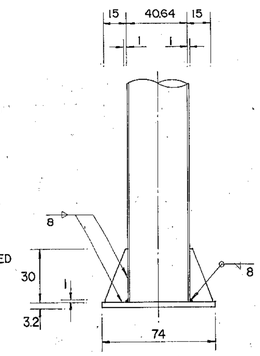


BASE OF STEEL POLE
SCALE 1 : 20

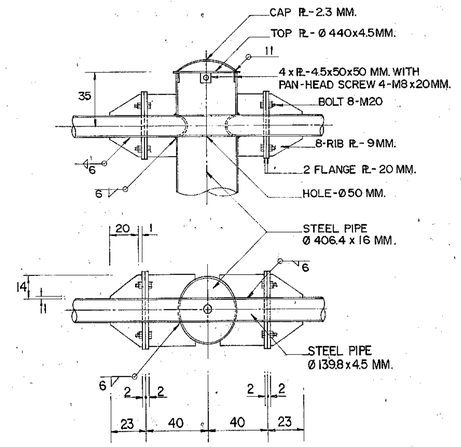


TOP OF STEEL POLE AND JOINT DETAILS
SCALE 1 : 20

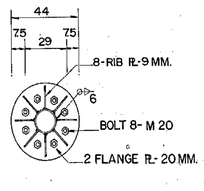


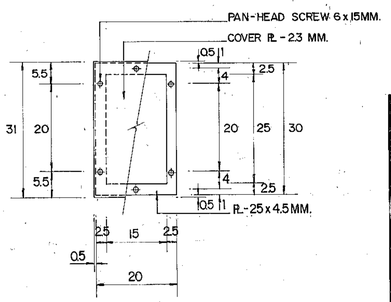


SECTION (C)-(C)
SCALE 1 : 7.5

# KINGDOM OF THAILAND
## MINISTRY OF TRANSPORT AND COMMUNICATIONS
## DEPARTMENT OF HIGHWAYS

STANDARD DRAWING

STEEL POLE FOR TWO LEGS OVERHANGING TRAFFIC SIGN FOR SIGN PLATES NOT MORE THAN 2 x 52,800 SQ.CM.-I

| | | |
|---|---|---|
| DESIGNED : D.O.H. & CONSULTANTS | CHECKED : | DATE JULY 1994 |
| SUBMITTED : (DIRECTOR OF LOCATION & DESIGN DIVISION) | | SCALE AS SHOWN |
| | | DWG. NO. RS-112 |
| APPROVED : (DIRECTOR GENERAL) | | SHEET NO. 29 |

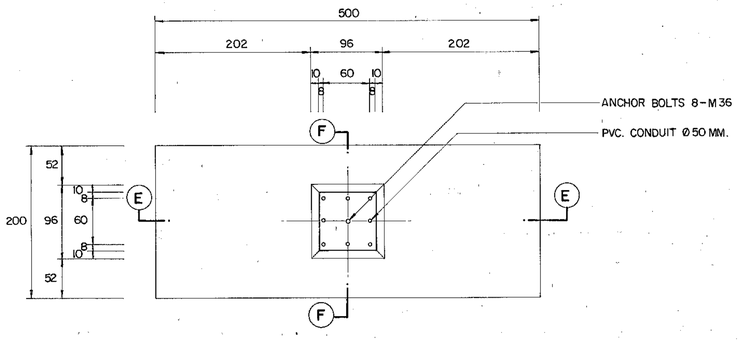


## PLAN OF FOUNDATION TYPE (A)
SCALE 1 : 40

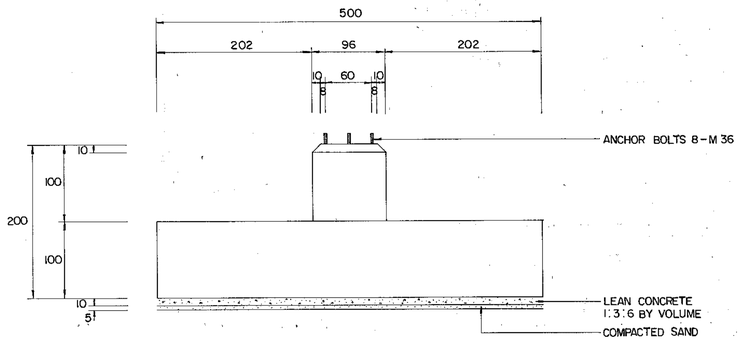


## FRONT OF FOUNDATION TYPE (A)
SCALE 1 : 40

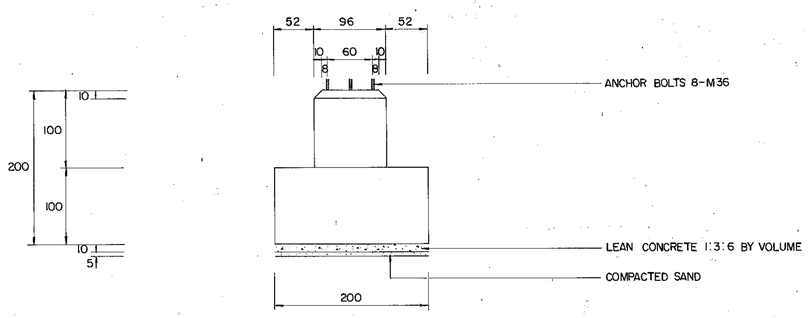


## SIDE OF FOUNDATION TYPE (A)
SCALE 1 : 40

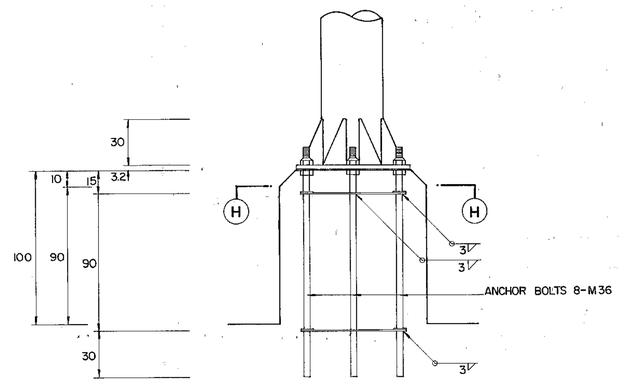


## ANCHOR BOLT DETAILS
SCALE 1 : 20

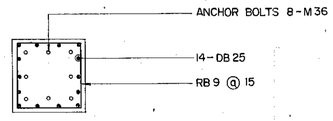


## SECTION (G) - (G)
SCALE 1 : 40

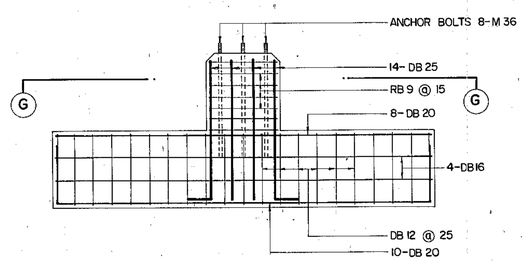


## SECTION (E) - (E)
SCALE 1 : 40

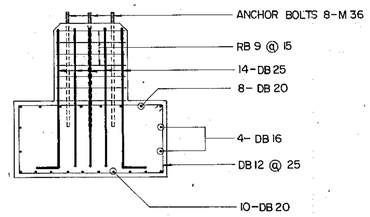


## SECTION (F) - (F)
SCALE 1 : 40

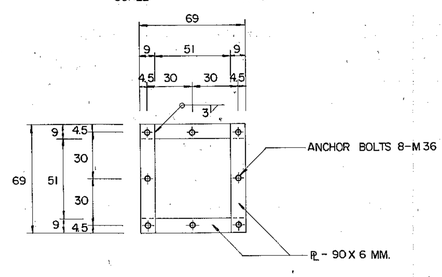


## SECTION (H) - (H)
SCALE 1 : 20

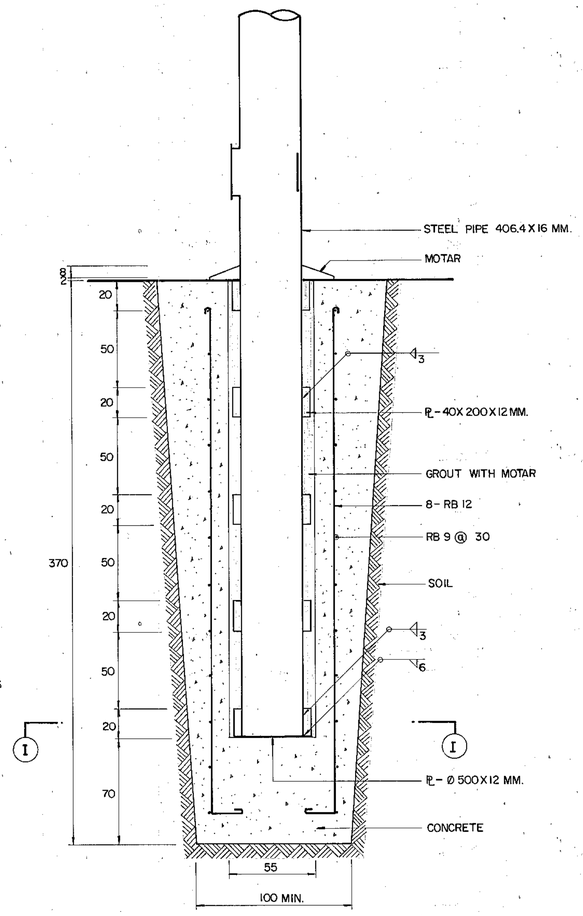


## FOUNDATION TYPE (B)
SCALE 1 : 20

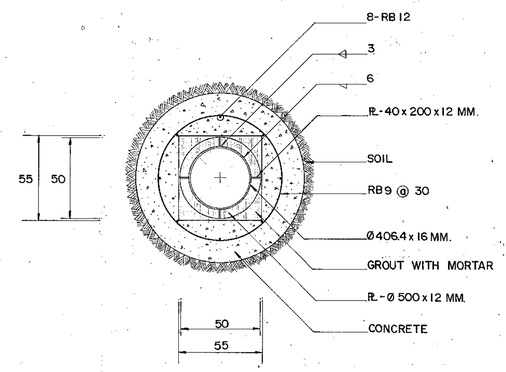


## SECTION (I) - (I)
SCALE 1 : 20

## NOTES :

1. DIMENSIONS FOR WELDING SYMBOLS ARE IN MILLIMETERS, ALL OTHER DIMENSIONS ARE IN CENTIMETERS UNLESS OTHERWISE INDICATED.
2. THIS DRAWING SHALL BE USED IN COMBINATION WITH DWG. NO. RS-112.

**KINGDOM OF THAILAND**
MINISTRY OF TRANSPORT AND COMMUNICATIONS
DEPARTMENT OF HIGHWAYS

STANDARD DRAWING

STEEL POLE FOR TWO LEGS OVERHANGING TRAFFIC SIGN FOR SIGN PLATES NOT MORE THAN 2x52,800 SQ.CM.-II

| | | |
|---|---|---|
| DESIGNED : D.O.H. & CONSULTANTS | CHECKED : | DATE JULY 1994 |
| SUBMITTED : (DIRECTOR OF LOCATION & DESIGN DIVISION) | | SCALE AS SHOWN |
| APPROVED : (DIRECTOR GENERAL) | | DWG. NO. RS-113 |
| | | SHEET NO. 30 |

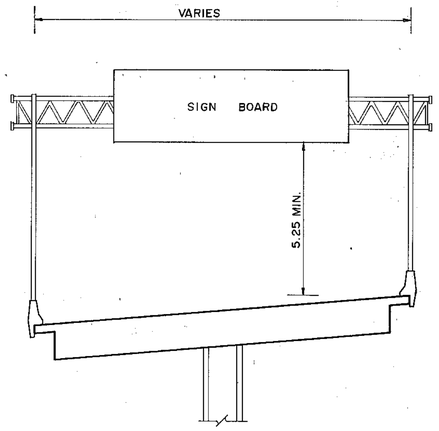


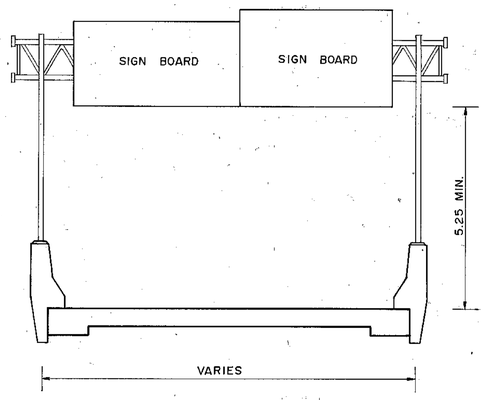


FRONT ELEVATION

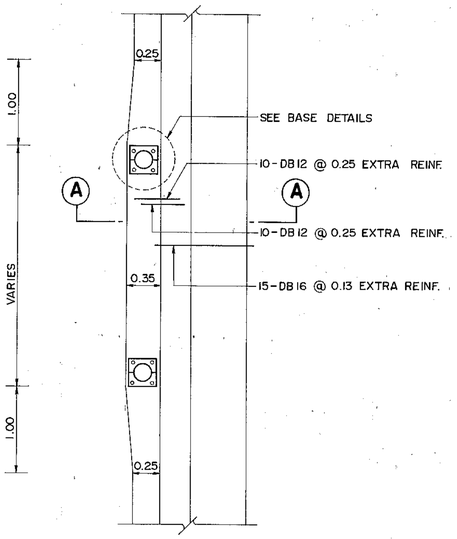


TOP VIEW

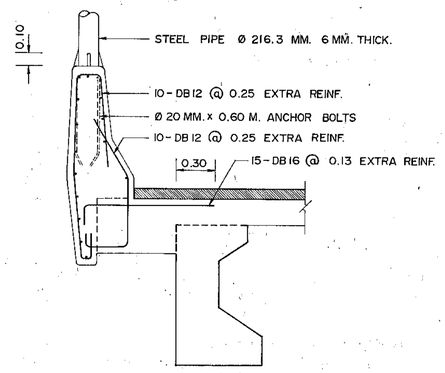


SECTION (A)-(A)

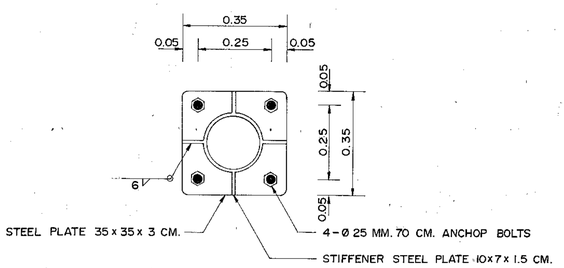


PLAN

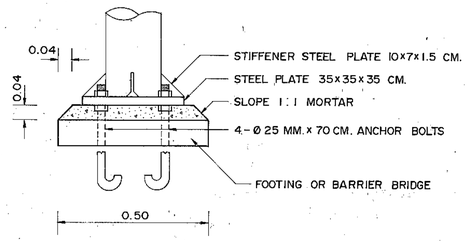


SECTION

BASE DETAILS

OVERHEAD SIGN AND FRAME ON BARRIER

NOT TO SCALE

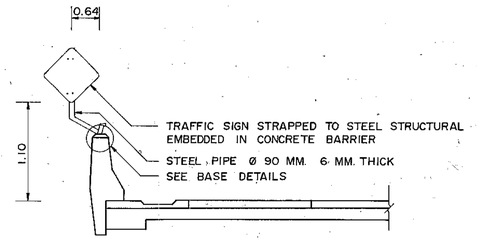


FRONT ELEVATION

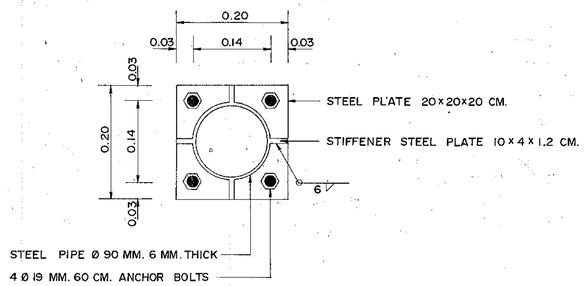


BASE DETAILS

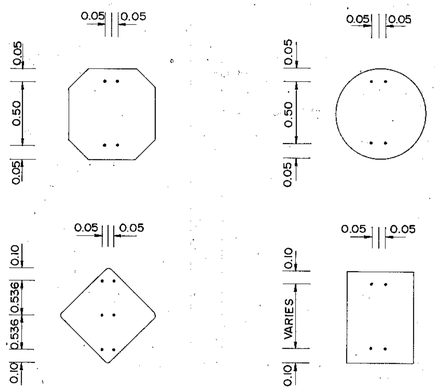


ASSEMBLY DETAILS

TRAFFIC SIGN AND FRAME ON BARRIER

NOT TO SCALE

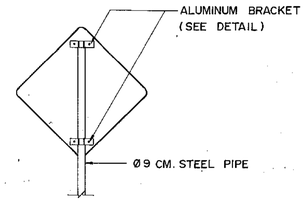


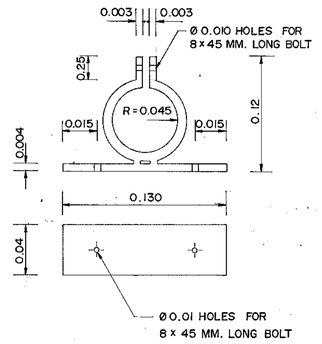


ALUMINUM BRACKET ASSEMBLY DETAILS

NOT TO SCALE

NOTES :

ALL DIMENSIONS ARE IN METERS UNLESS OTHERWISE INDICATED

| | | |
|---|---|---|
| KINGDOM OF THAILAND<br>MINISTRY OF TRANSPORT AND COMMUNICATIONS<br>DEPARTMENT OF HIGHWAYS | | |
| STANDARD DRAWING<br>INSTALLATION OF OVERHEAD SIGN AND FRAME TYPE II & TRAFFIC SIGN AND FRAME ON BARRIERS | | |
| DESIGNED : D.O.H. & CONSULTANTS | CHECKED : | DATE JULY 1994 |
| SUBMITTED : (DIRECTOR OF LOCATION & DESIGN DIVISION) | | SCALE NONE |
| APPROVED : (DIRECTOR GENERAL) | | DWG. NO. RS-114 |
| | | SHEET NO. 31 |

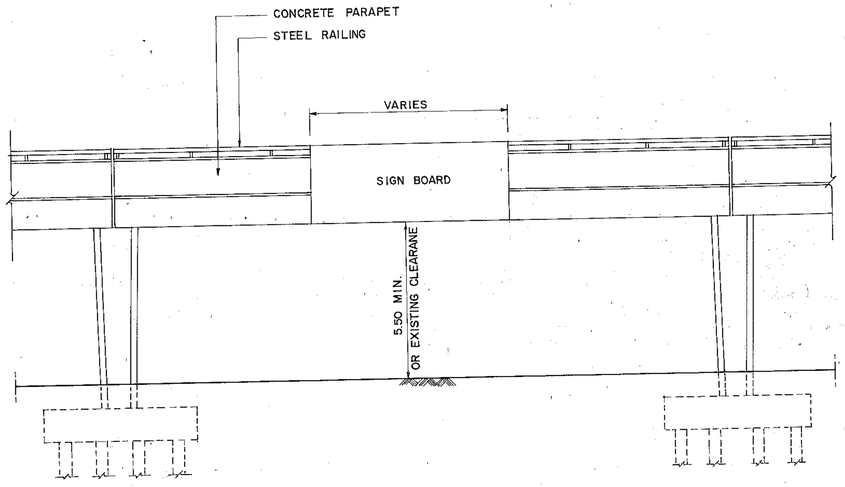


## SIGN BOARD ERECTION ON BRIDGE DECK
SCALE 1 : 100

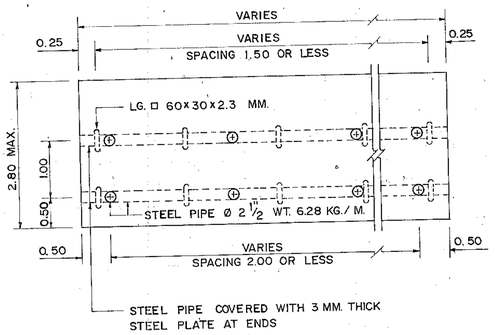


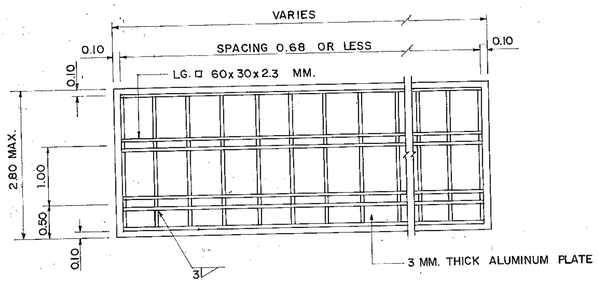


## TYPICAL SIGN FRAME
SCALE 1 : 50

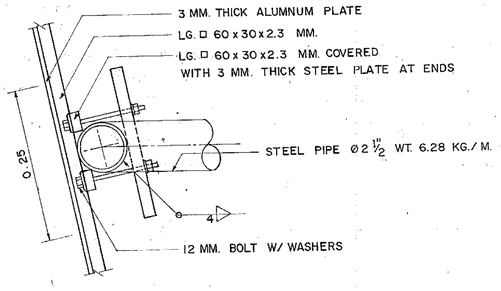


## DETAIL "A"
SCALE 1 : 5

## NOTES

1. DIMENSIONS SHOWN ARE IN METERS EXCEPT WELDING SYMBOLS ARE IN MILLIMETERS, OR OTHERWISE INDICATED.
2. STRUCTURAL CARBON STEEL SHALL CONFORM TO TIS. 116 GRADE Fe 24.
3. STEEL PIPE SHALL BE PLAIN ENDS, MEDIUM CLASS CONFORM TO TIS. 107 GRADE HS 41.
4. VERTICAL PIPE POST SHALL BE CONNECTED AT UPPER PART.
5. LIGHT GAUGE STEEL (LG.) OF SIGN FRAME SHALL BE CONNECTED TOGETHER WITH 3 MM. WELD.
6. ALL STEEL AND BOLT ASSEMBLY SHALL BE GALVANIZED. ZINC COATING SHALL NOT BE LESS THAN 550 GRAMS PER SQUARE METER.

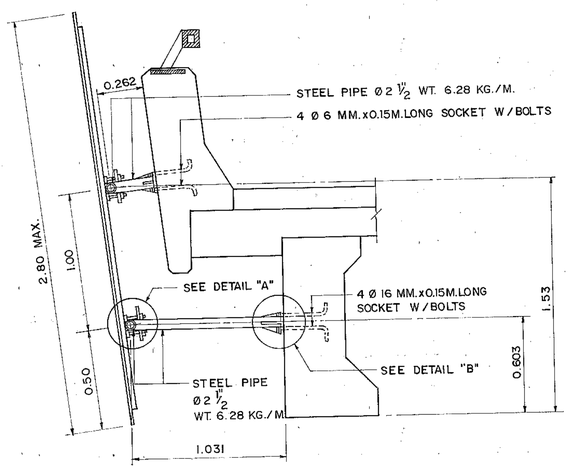


## TYPICAL SIGN FRAME SUPPORT
SCALE 1 : 20

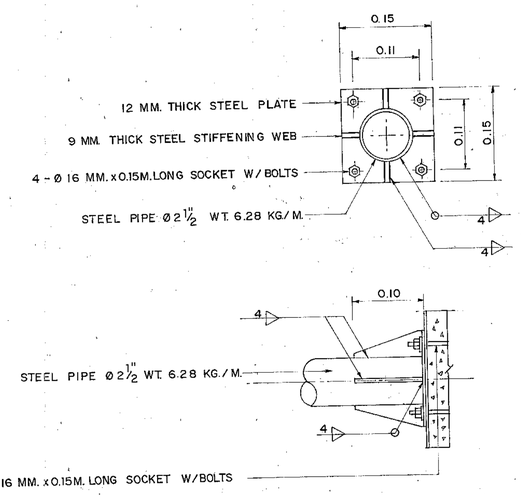


## DETAIL "B"
SCALE 1 : 5

# KINGDOM OF THAILAND
## MINISTRY OF TRANSPORT AND COMMUNICATIONS
## DEPARTMENT OF HIGHWAYS

STANDARD DRAWING

STEEL FRAME FOR MOUNTING OVERHEAD SIGNS AT BRIDGE DECK

| | | |
|---|---|---|
| DESIGNED : D.O.H. & CONSULTANTS | CHECKED : | DATE JULY 1994 |
| SUBMITTED : (DIRECTOR OF LOCATION & DESIGN DIVISION) | | SCALE AS SHOWN |
| | | DWG. NO. RS-115 |
| APPROVED : (DIRECTOR GENERAL) | | SHEET NO. 32 |

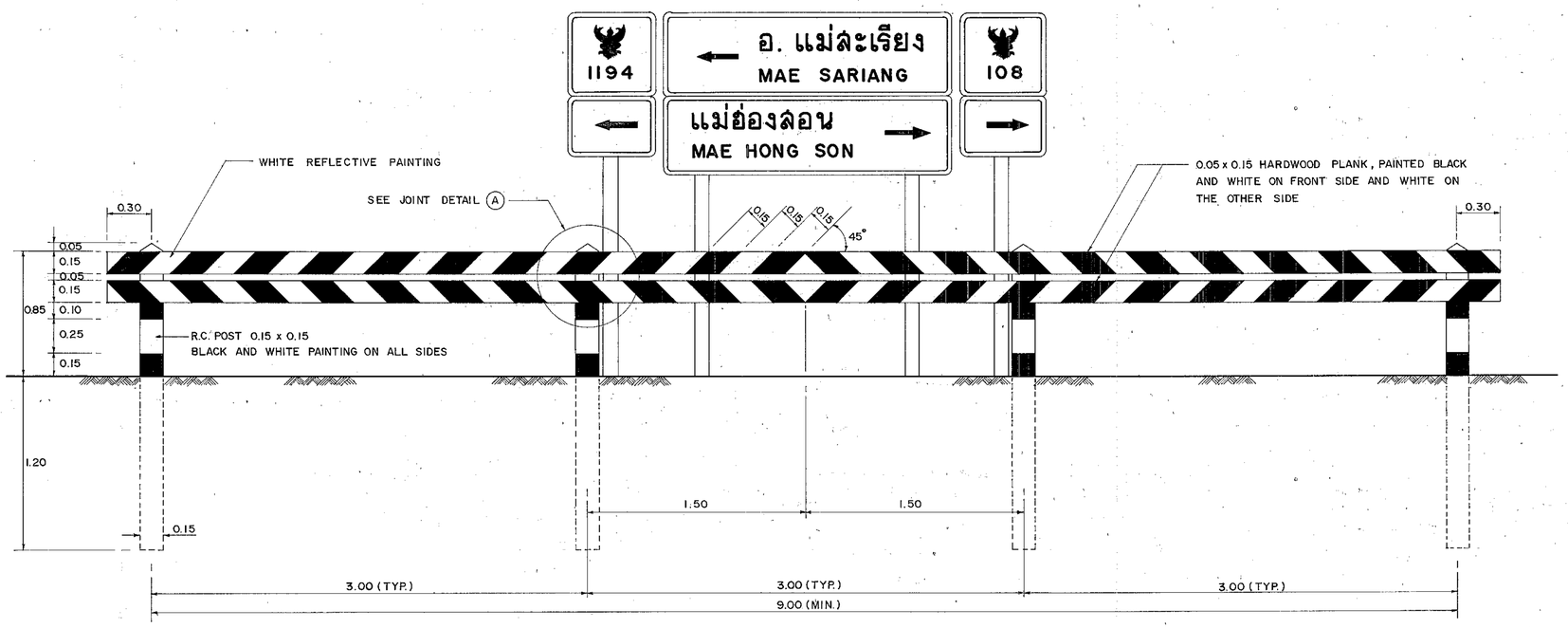


## FRONT ELEVATION
SCALE 1 : 20

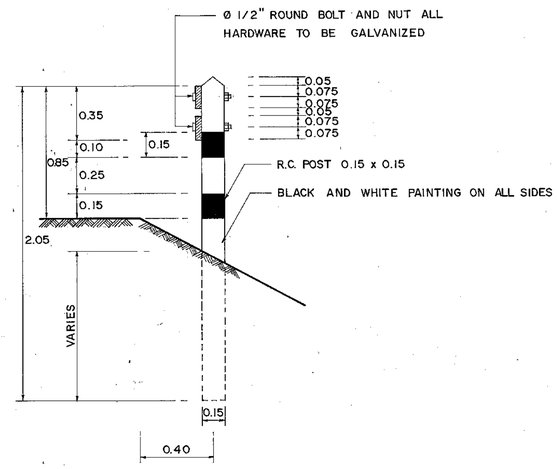


## SIDE VIEW
SCALE 1 : 20

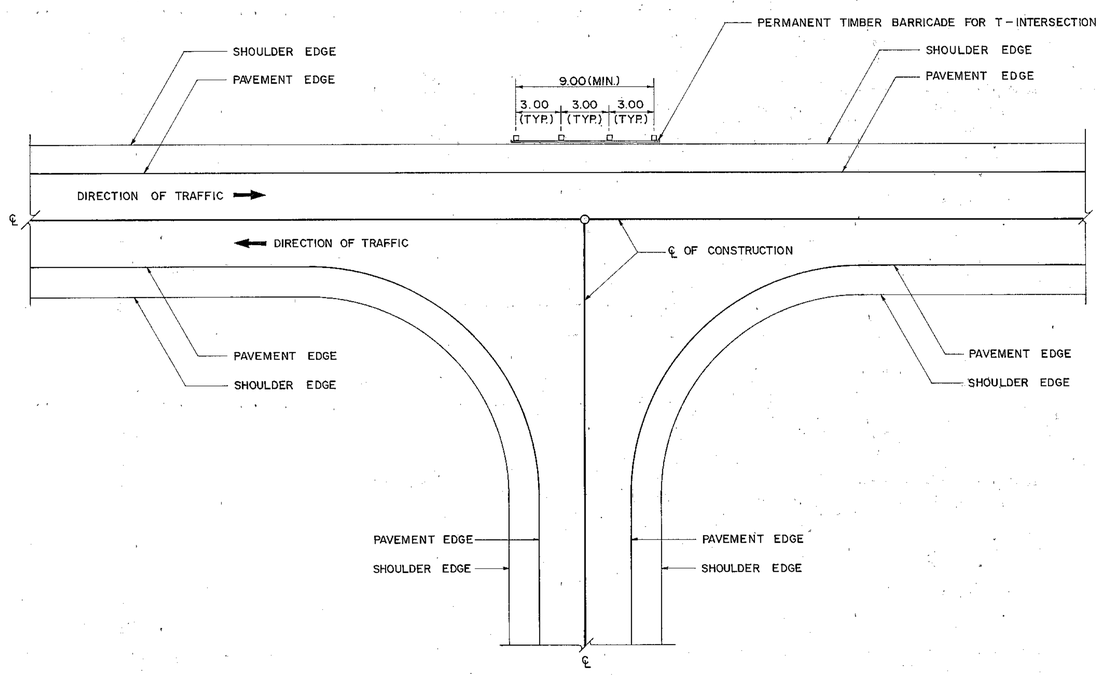


## PLAN
NOT TO SCALE

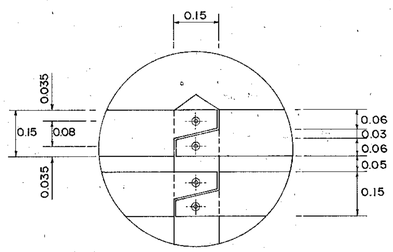


## JOINT DETAIL "A"
SCALE 1 : 10

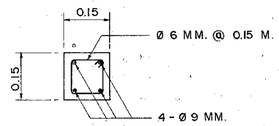


## R.C. POST SECTION
SCALE 1 : 10

## NOTES :

1. DIMENSIONS ARE IN METERS UNLESS OTHERWISE INDICATED.
2. THIS DRAWING SHOWN THE DETAIL OF TIMBER BARRICADE ONLY, ACTUAL LOCATION OF BARRICADE SHALL BE AS INDICATED ON THE DETAIL OF INTERSECTION DRAWING OR AS DIRECTED BY THE ENGINEER.
3. ALL WOOD PORTION SHALL BE GIVEN ONE COAT OF PRIMING PAINT IN ACCORDANCE WITH TIS. 357 AND TO FIELD COATS OF GLOSS ENAMEL PAINT IN ACCORDANCE WITH TIS. 327 WHITE PAINT IN THE LAST COATING SHALL BE REFLECTORIZED.
4. R.C. POST SHALL BE GIVEN TWO COATS OF PAINT IN ACCORDANCE WITH TIS. 327.
5. ALL TRAFFIC SIGNS SHALL BE IN ACCORDANCE WITH THE MANUAL OF TRAFFIC CONTROL DEVICES AS PUBLISHED BY THE DEPARTMENT OF HIGHWAYS 1988, THE SPECIFICATIONS, THE SPECIAL PROVISIONS AND THE DRAWINGS.
6. CONCRETE SHALL HAVE A MINIMUM ULTIMATE COMPRESSIVE STRENGTH OF 180 KSC. FOR 15x15x15 CM. CUBE AT 28 DAYS. AN APPROXIMATE MIX DESIGN PER CUBIC METER IS SUGGESTED AS FOLLOWS :

| | | |
|---|---|---|
| PORTLAND CEMENT TYPE 1 | 320 | KG.(MIN.) |
| SAND | 0.43 | $M^3$ |
| CRUSHED ROCK OR GRAVEL | 0.86 | $M^3$ |
| CONCRETE SLUMP | 10 | CM.(MAX.) |

7. REINFORCING STEEL SHALL CONFORM TO TIS. 20 GRADE SR 24

# KINGDOM OF THAILAND
## MINISTRY OF TRANSPORT AND COMMUNICATIONS
## DEPARTMENT OF HIGHWAYS

STANDARD DRAWING

PERMANENT TIMBER BARRICADE FOR T-INTERSECTION

| | | |
|---|---|---|
| DESIGNED : D.O.H. & CONSULTANTS | CHECKED : | DATE JULY 1994 |
| SUBMITTED : (DIRECTOR OF LOCATION & DESIGN DIVISION) | | SCALE AS SHOWN |
| | | DWG. NO. RS-201 |
| APPROVED : (DIRECTOR GENERAL) | | SHEET NO. 33 |

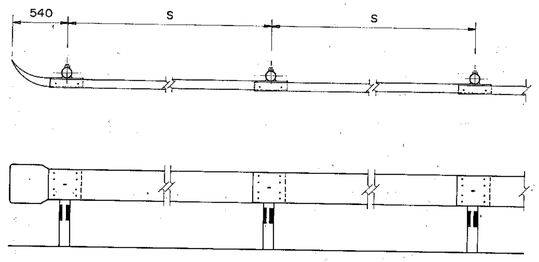


## PLAN AND ELEVATION
SCALE 1 : 30

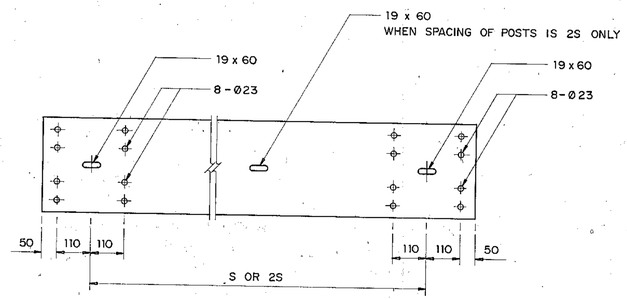


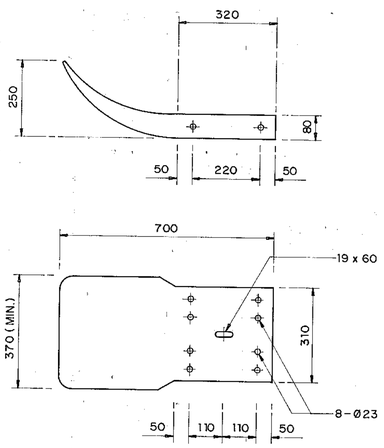


## TERMINAL SECTION
SCALE 1 : 10

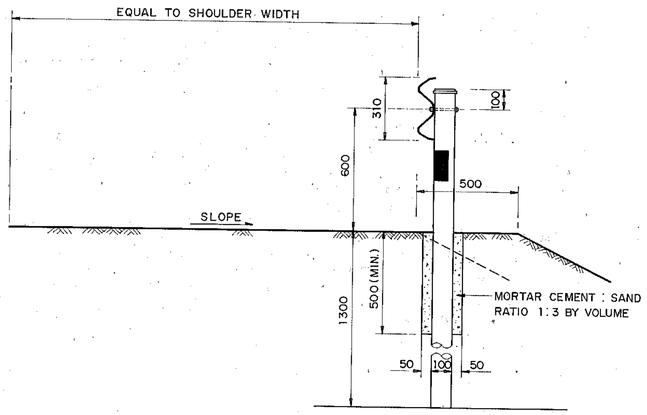


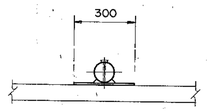


## BACK-UP PLATE
SCALE 1 : 15

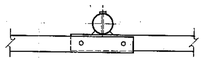

TRAFFIC DIRECTION

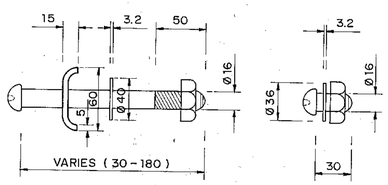


## BOLT & NUT
SCALE 1 : 3

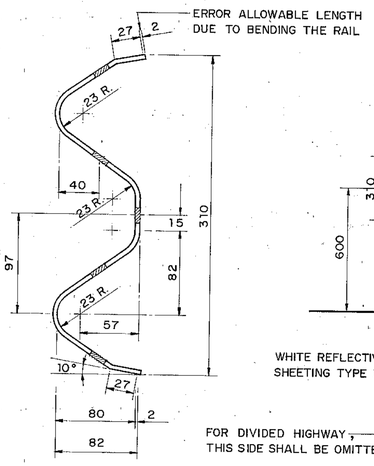


## RAIL SECTION
SCALE 1 : 3

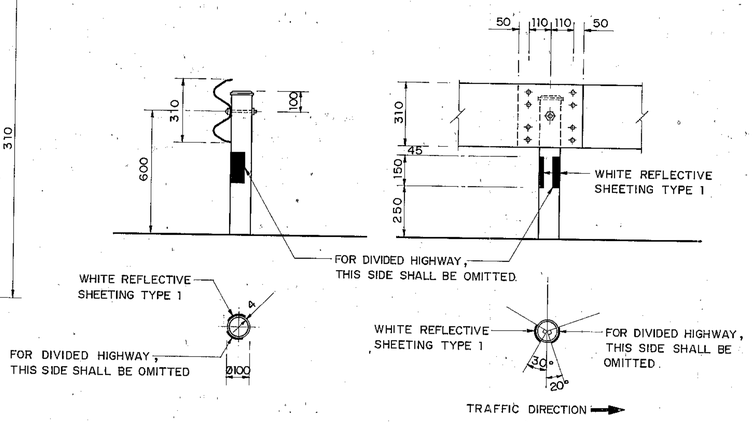


## POST
SCALE 1 : 15

## NOTES :

1. ALL DIMENSION ARE IN MILLIMETERS UNLESS OTHERWISE INDICATED.
2. GUARDRAIL SHALL CONFORM TO THE FOLLOWING REQUIREMENT :
   2.1 STEEL RAIL SHALL BE MADE FROM STEEL OF THICKNESS NOT LESS THAN THE MINIMUM THICKNESS SPECIFIED FOR EACH CLASS OF RAIL AND SHALL BE GALVANIZED WITH THE MINIMUM WEIGHT OF ZINC COATING ACCORDING TO THE TYPE OF RAIL AS SPECIFIED IN TABLE BELOW :

| RAIL | | MIN. RAIL THICKNESS ( MILLIMETER ) | MIN. WEIGHT OF ZINC COATING ( GRAMS PER SQUAREMETER ) |
|---|---|---|---|
| CLASS | TYPE | | |
| 1 | 1 | 3.2 | 550 |
| | 2 | 3.2 | 1,100 |
| 2 | 1 | 2.5 | 550 |
| | 2 | 2.5 | 1,100 |

   2.2 MECHANICAL PROPERTES OF RAIL :

| RAIL | | MIN. ULTIMATE TENSILE STRENGTH ( KG/MM.$^2$ ) | MIN. PERCENTAGE OF ELONGATION | MAX. DEFLECTION | | | |
|---|---|---|---|---|---|---|---|
| | | | | MAX. LOAD TRAFFIC FACE UP | | MAX. LOAD TRAFFIC FACE DOWN | |
| CLASS | TYPE | | | KG. | DEFLECTION (MM.) | KG. | DEFLECTION (MM.) |
| 1 | 1 | 41 | 21 | 910 | 50 | 720 | 50 |
| | 2 | | | 1,360 | 75 | 1,090 | 75 |
| 2 | 1 | 41 | 21 | 680 | 50 | 545 | 50 |
| | 2 | | | 910 | 75 | 720 | 75 |

   2.3. POST SHALL BE GALVANIZED STANDARD STEEL PIPE
   2.4 THE GALVANIZING OF BOLTS, NUTS, WASHERS AND SIMILAR THREADED FASTENERS SHALL BE IN ACCORDANCE WITH TIS. 171 CLASS 5.8
3. UNLESS OTHERWISE SPECIFIED, GUARDRAIL CLASS 1 SHALL BE USED FOR HIGHWAY CLASS D AND CLASS 1 FOR OTHER HIGHWAY CLASSES, GUARDRAIL CLASS 2 SHALL BE USED.
4. IN CASE OF HIGH RESISTANCE TO CORROSION REQUIREMENT, GUARDRAIL TYPE 2 SHALL BE USED.
5. SPACING OF POSTS SHALL BE LOCATED AS FOLLOWS

| RADIUS OF CURVE R (M.) | SPACING OF POSTS S (M.) |
|---|---|
| ON TANGENT OR R $\geqslant$ 700 | 4.00 |
| 450 $\leqslant$ R < 700 | 3.00 |
| 150 $\leqslant$ R < 450 | 2.00 |
| R < 150 | 1.00 |

| *HEIGHT OF FILL H (M.) | SPACING OF POSTS S (M.) |
|---|---|
| H $\leqslant$ 3.00 | 4.00 |
| 3.00 < H $\leqslant$ 4.00 | 3.00 |
| 4.00 < H $\leqslant$ 5.00 | 2.00 |
| 5.00 < H $\leqslant$ 7.00 | 1.00 |

*FOR SIDE SLOPE 2 : 1 OR STEEPER

FOR HORIZONTAL CURVE WITH HIGH FILL, THE MINIMUM SPACING VALUE OF THE ONE SHALL BE GOVERN.

6. GUARDRAIL, IN GENERAL, IS MORE SUITABLE THAN GUIDE POST ON HORIZONTAL CURVE SECTION WITH HIGH FILL MORE THAN 5.00 M. (AND SIDE SLOPE IS STEEPER THAN 3:1) AND NOT RECOMMENDED FOR HIGH FILL OVER 7.00 M.
7. GUARDRAIL INSTALLED IN CURVE WHERE RADIUS IS LESS THAN 50 M. SHALL BE PRE-BENT FROM THE FACTORY.
8. BACK-UP PLATE OF THE SAME CLASS AND TYPE AS THE RAIL WITH INTERMEDIATE POST SHALL BE PROVIDED WHERE SPACING OF POSTS IS 2S M.
9. UNLESS OTHERWISE SPECIFIED ON THIS DRAWING, GUARDRAIL SHALL BE IN ACCORDANCE WITH TIS. 248
10. REFLECTIVE SHEETING SHALL CONFORM TO TIS. 606 TYPE 1. ( ESEFFICIENT OF RETRO-REFLECTION LEVEL 1 )

## REMARK :

THIS BARRIER IS SUITABLE ONLY IN SPECIFIC LOCATIONS AND CERTAIN CONDITIONS, IT SHOULD BE APPLIED WITH THE FIRM INFORMATIONS CONCERNED AND RECOMMENDED BY THE ENGINEER.

# KINGDOM OF THAILAND
MINISTRY OF TRANSPORT AND COMMUNICATIONS
DEPARTMENT OF HIGHWAYS

STANDARD DRAWING

W-BEAM GUARDRAIL

| | | |
|---|---|---|
| DESIGNED : D.O.H. & CONSULTANTS | CHECKED : | DATE JULY 1994 |
| SUBMITTED : (DIRECTOR OF LOCATION & DESIGN DIVISION) | | SCALE AS SHOWN |
| APPROVED : (DIRECTOR GENERAL) | | DWG. NO. RS-301 |
| | | SHEET NO. 34 |

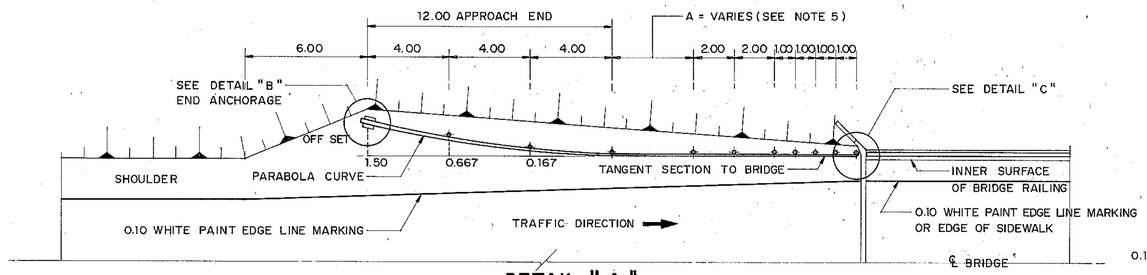


## DETAIL "A"
SCALE 1 : 150

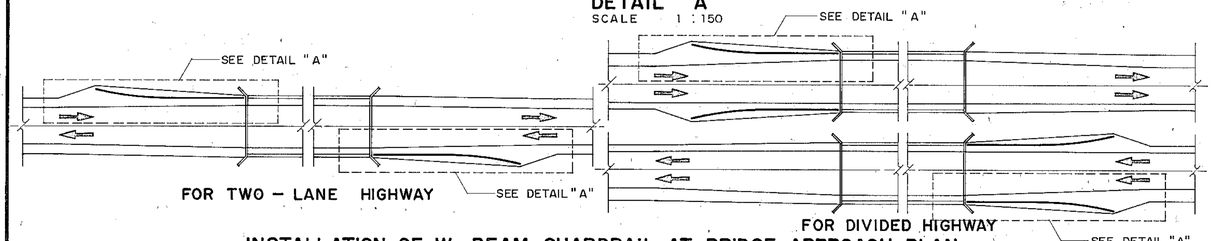


FOR TWO - LANE HIGHWAY

FOR DIVIDED HIGHWAY

## INSTALLATION OF W-BEAM GUARDRAIL AT BRIDGE APPROACH PLAN
SCALE 1 : 500

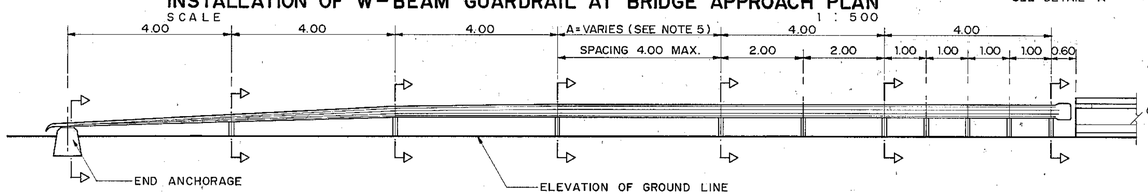


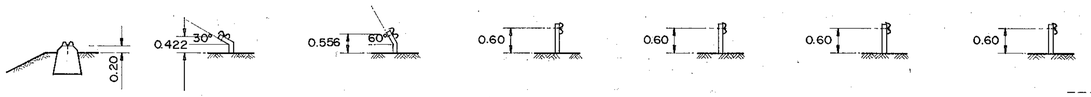


## ELEVATION
SCALE 1 : 75

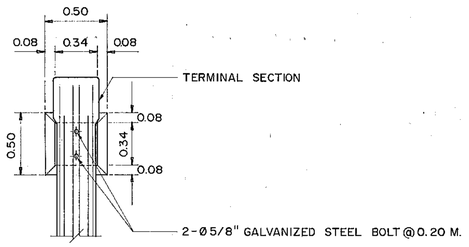


## PLAIN CONCRETE ANCHOR
SCALE 1 : 25

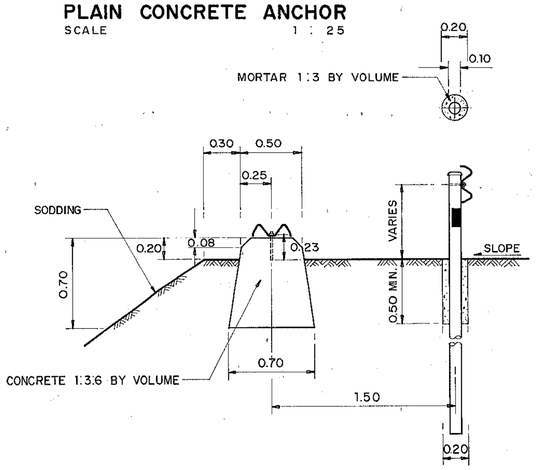


## DETAIL "B"
SCALE 1 : 25

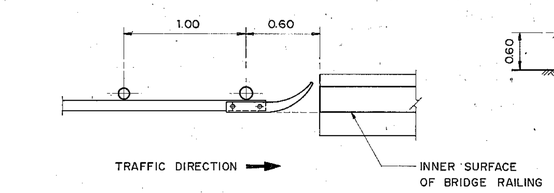


## PLAN

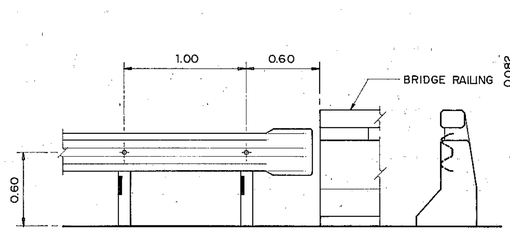


ELEVATION SIDE VIEW

## DETAIL "C"
SCALE 1 : 25

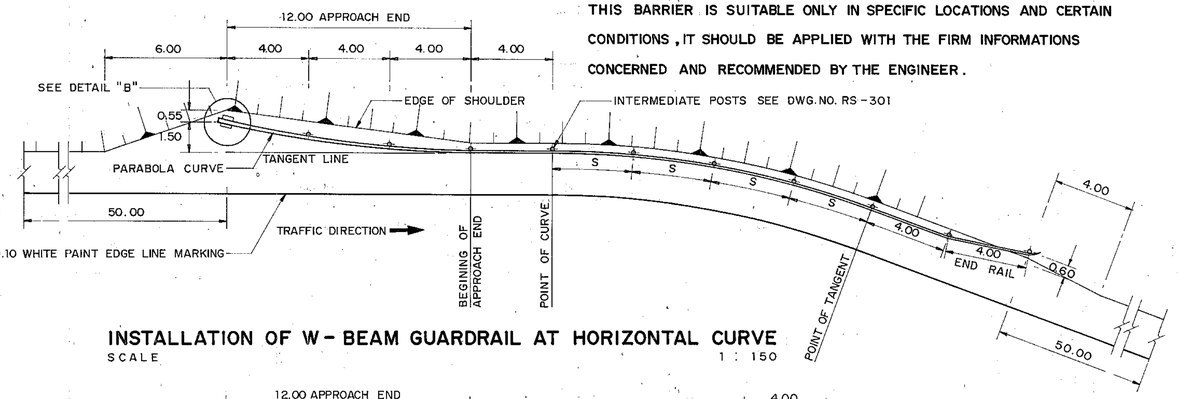


## INSTALLATION OF W-BEAM GUARDRAIL AT HORIZONTAL CURVE
SCALE 1 : 150

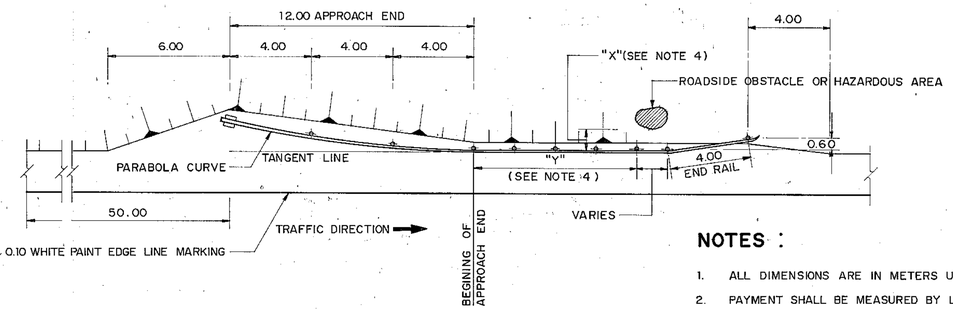


## APPROACH END INSTALLATION FOR ROADSIDE OBSTACLE
SCALE 1 : 150

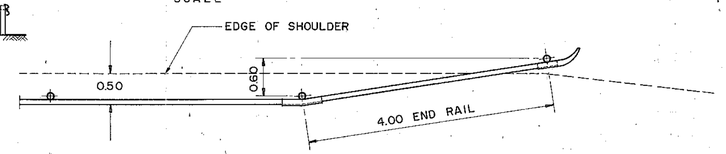


## PLAN

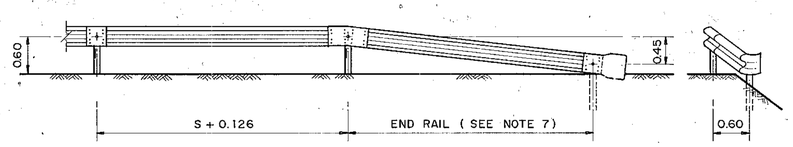


ELEVATION SIDE VIEW

## END RAIL
SCALE 1 : 50

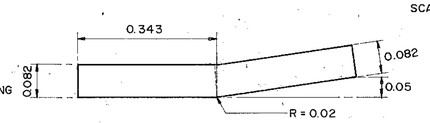


PLAN

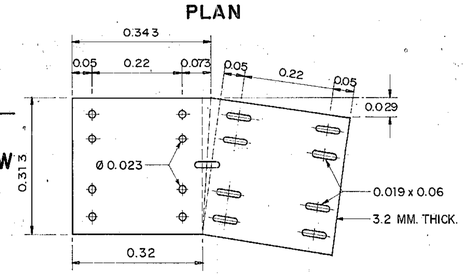


ELEVATION

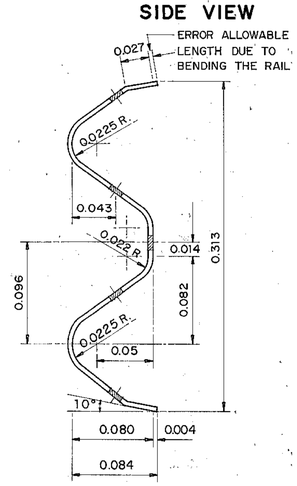


## SPLICE SECTION
NOT TO SCALE

## REMARK :

THIS BARRIER IS SUITABLE ONLY IN SPECIFIC LOCATIONS AND CERTAIN CONDITIONS, IT SHOULD BE APPLIED WITH THE FIRM INFORMATIONS CONCERNED AND RECOMMENDED BY THE ENGINEER.

## NOTES :

1. ALL DIMENSIONS ARE IN METERS UNLESS OTHERWISE INDICATED.
2. PAYMENT SHALL BE MEASURED BY LINEAR METERS OF RAIL INCLUDING TERMINAL SECTION CONCRETE ANCHOR AND SPLICE SECTION.
3. OBSTACLE MEANS PERMANENT STRUCTURE WHICH MAY BE DANGEROUS TO VEHICLES STRIKING SUCH AS, ELECTRIC POLE, BRIDGE PIER, ETC.
4. SPACINGS "X" AND "Y" ARE AS FOLLOWS.
   4.1 "X" = 0.50 - 1.50 M. "Y" = 4.00 M. POST SPACING 2.00 M.
   4.2 "X" = 1.50 - 3.00 M. "Y" = 8.00 M. POST SPACING 2.00 M.
5. THE PORTION OF GUARDRAIL INDICATED BY "A" SHALL NOT APPLY IF EMBANKMENT HEIGHT IS LESS THAN 4.00 M. ( SIDE SLOPE 1.5 : 1 MAX.)
6. THIS TYPE OF INSTALLATION SHALL BE FOR HIGHWAY CLASSIFICATIONS OF D AND 1 OR OTHERWISE INDICATED.
7. DIVIDED HIGHWAYS DO NOT NEED END RAIL.

## WARRANTING FEATURES FOR W-BEAM GUARDRAIL INSTALLATION

1. POSSIBLE HAZARDS FROM ROAD SIDE.
2. HEIGHT OF EMBANKMENT OF ROADWAY IS MORE THAN 5.00 M. ( 7.00 M. MAXIMUM.) AND SIDE SLOPE IS STEEPER THAN 3 : 1.
3. STEEPNESS OF DOWNGRADE IS MORE THAN 6% AND HEIGHT OF EMBANKMENT IS MORE THAN 3.00 M.
4. DEPTH OF WATER AT TOE OF SLOPE IS MORE THAN 1.50 M.
5. HORIZONTAL CURVE WITH RADIUS OF CURVE LESS THAN 150 M.
6. ROADSIDE HAZARDOUS TOPOGRAPHY, SUCH AS RIVERS, DEEP VALLEYS, ROCKS ON THE FILL SLOPE WHICH MAY POSSIBLE GIVE SERIOUS DAMAGE TO VEHICLES, SPECIAL CONSIDERATION MUST BE PAID TO BOTH ECONOMY AND SAFETY.

# KINGDOM OF THAILAND
MINISTRY OF TRANSPORT AND COMMUNICATIONS
DEPARTMENT OF HIGHWAYS

STANDARD DRAWING

W-BEAM GUARDRAIL INSTALLATION AND
W-BEAM GUARDRAIL APPROACH TYPE I

| | | |
|---|---|---|
| DESIGNED : D.O.H. & CONSULTANTS | CHECKED : | DATE JULY 1994 |
| SUBMITTED : (DIRECTOR OF LOCATION & DESIGN DIVISION) | | SCALE AS SHOWN |
| APPROVED : (DIRECTOR GENERAL) | | DWG. NO. RS-302 |
| | | SHEET NO. 35 |

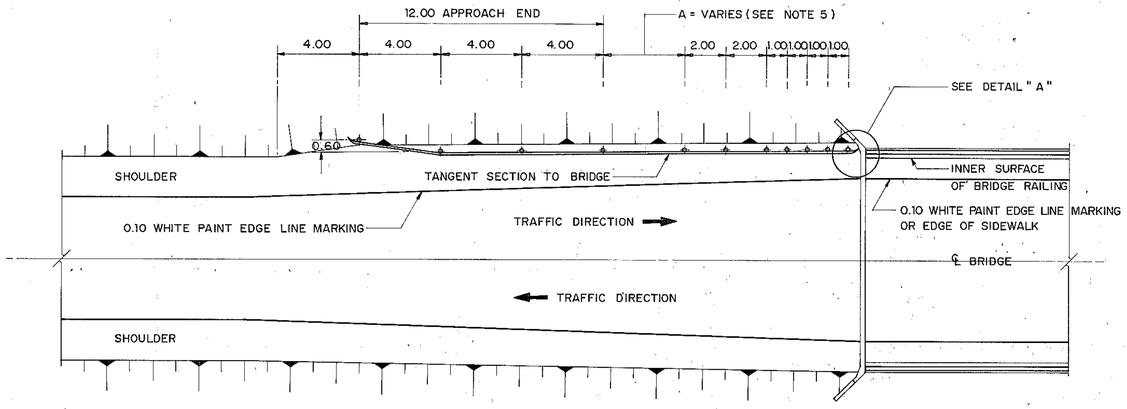


## INSTALLATION OF W-BEAM GUARDRAIL AT BRIDGE APPROACH PLAN

SCALE 1 : 150

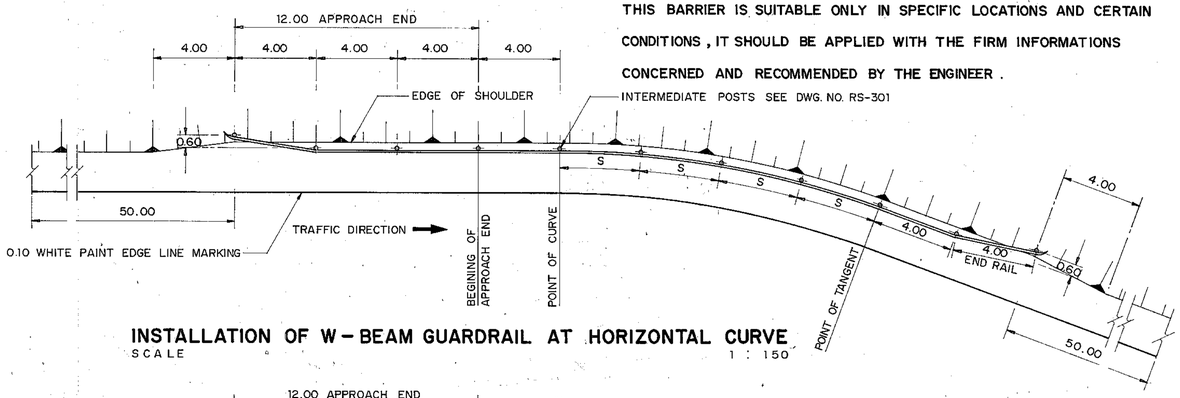


## INSTALLATION OF W-BEAM GUARDRAIL AT HORIZONTAL CURVE

SCALE 1 : 150

### REMARK :

THIS BARRIER IS SUITABLE ONLY IN SPECIFIC LOCATIONS AND CERTAIN CONDITIONS, IT SHOULD BE APPLIED WITH THE FIRM INFORMATIONS CONCERNED AND RECOMMENDED BY THE ENGINEER.

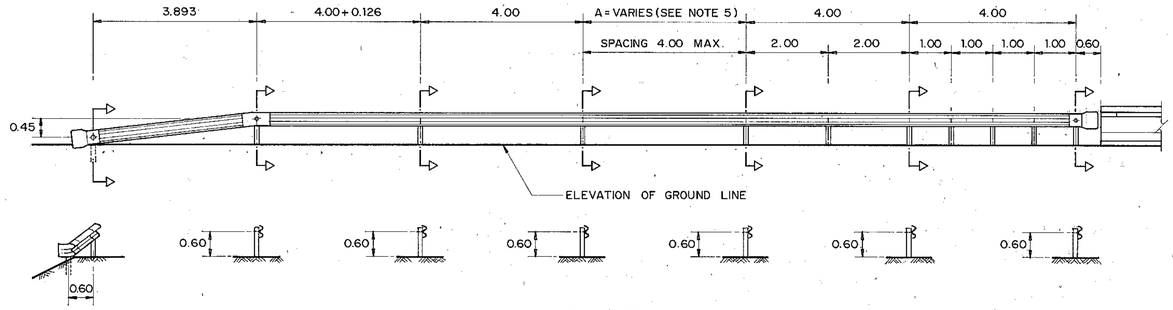


## ELEVATION

SCALE 1 : 75

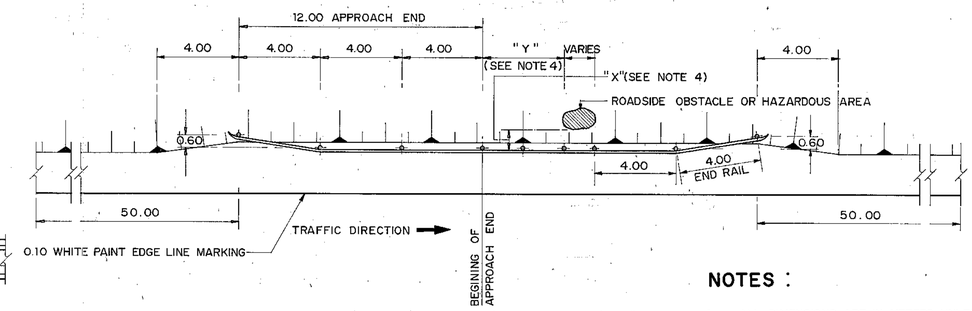


## APPROACH INSTALLATION FOR ROADSIDE OBSTACLE

SCALE 1 : 150

### NOTES :

1. ALL DIMENSIONS ARE IN METERS UNLESS OTHERWISE INDICATED.
2. PAYMENT SHALL BE MEASURED BY LINEAR METERS OF RAIL INCLUDING TERMINAL SECTION AND SPLICE SECTION.
3. OBSTACLE MEANS PERMANENT STRUCTURE WHICH MAY BE DANGEROUS TO VEHICLES STRIKING SUCH AS, ELECTRIC POLE, BRIDGE PIER, ETC.
4. SPACINGS "X" AND "Y" ARE AS FOLLOWS.
   - 4.1 "X" = 0.50 - 1.50 M. "Y" = 4.00 M. POST SPACING 2.00 M.
   - 4.2 "X" = 1.50 - 3.00 M. "Y" = 6.00 M. POST SPACING 2.00 M.
5. THE PORTION OF GUARDRAIL INDICATED BY "A" SHALL NOT APPLY IF EMBANKMENT HEIGHT IS LESS THAN 4.00 M. (SIDE SLOPE 1.5 : 1 MAX)
6. THIS TYPE OF INSTALLATION SHALL BE FOR HIGHWAY CLASSIFICATIONS OF 2, 3 AND 4.

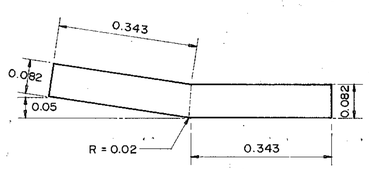


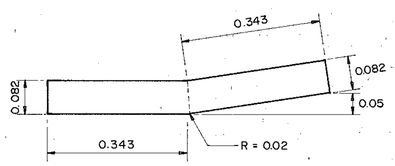


## PLAN

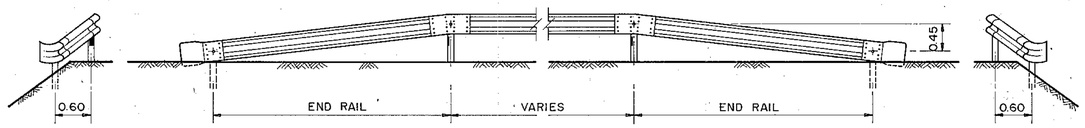


## ELEVATION

SCALE 1 : 50

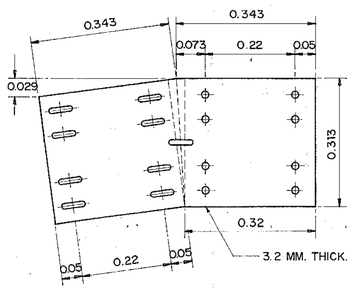


SPLICE SECTION DETAIL FOR APPROACH END

## ELEVATION

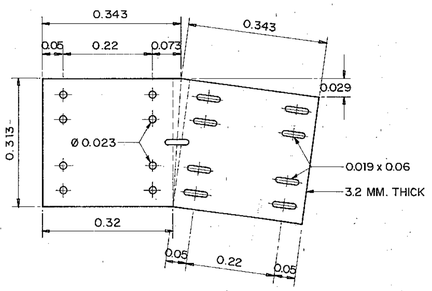


SPLICE SECTION DETAIL FOR END RAIL

## SPLICE SECTION

NOT TO SCALE

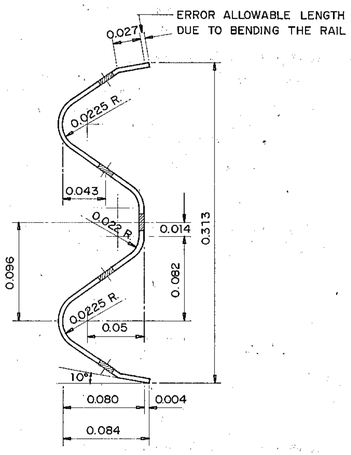


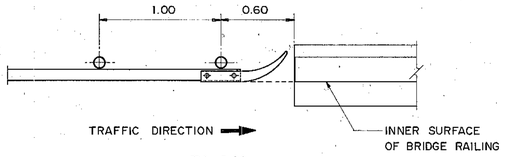


## PLAN

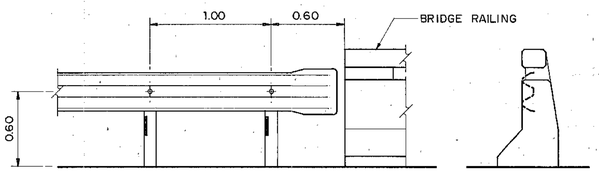


## ELEVATION



## SIDE VIEW

## DETAIL " A "

SCALE 1 : 25

## WARRANTING FEATURES FOR W-BEAM GUARDRAIL INSTALLATION

1. POSSIBLE HAZARDS FROM ROAD SIDE.
2. HEIGHT OF EMBANKMENT OF ROADWAY IS MORE THAN 5.00 M. (7.00 M. MAXIMUM.) AND SIDE SLOPE IS STEEPER THAN 3 : 1
3. STEEPNESS OF DOWNGRADE IS MORE THAN 6% AND HEIGHT OF EMBANKMENT IS MORE THAN 3.00 M.
4. DEPTH OF WATER AT TOE OF SLOPE IS MORE THAN 1.50 M.
5. HORIZONTAL CURVE WITH RADIUS OF CURVE LESS THAN 150 M.
6. ROADSIDE HAZARDOUS TOPOGRAPHY SUCH AS RIVERS, DEEP VALLEYS, ROCKS ON THE FILL SLOPE WHICH MAY POSSIBLE GIVE SERIOUS DAMAGE TO VEHICLES, SPECIAL CONSIDERATION MUST BE PAID TO BOTH ECONOMY AND SAFETY.

# KINGDOM OF THAILAND

MINISTRY OF TRANSPORT AND COMMUNICATIONS
DEPARTMENT OF HIGHWAYS

STANDARD DRAWING

W-BEAM GUARDRAIL INSTALLATION AND
W-BEAM GUARDRAIL APPROACH TYPE II

| | | |
|---|---|---|
| DESIGNED : D.O.H. & CONSULTANTS | CHECKED : | DATE JULY 1994 |
| SUBMITTED : (DIRECTOR OF LOCATION & DESIGN DIVISION) | | SCALE AS SHOWN |
| | | DWG. NO. RS-303 |
| APPROVED : (DIRECTOR GENERAL) | | SHEET NO. 36 |

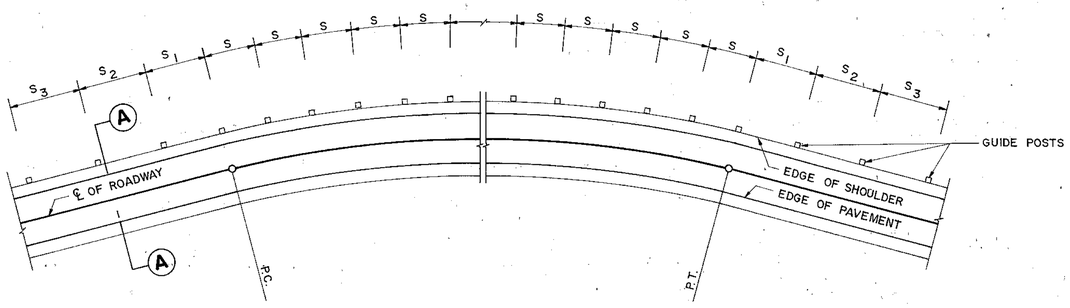


**PLAN**
NOT TO SCALE

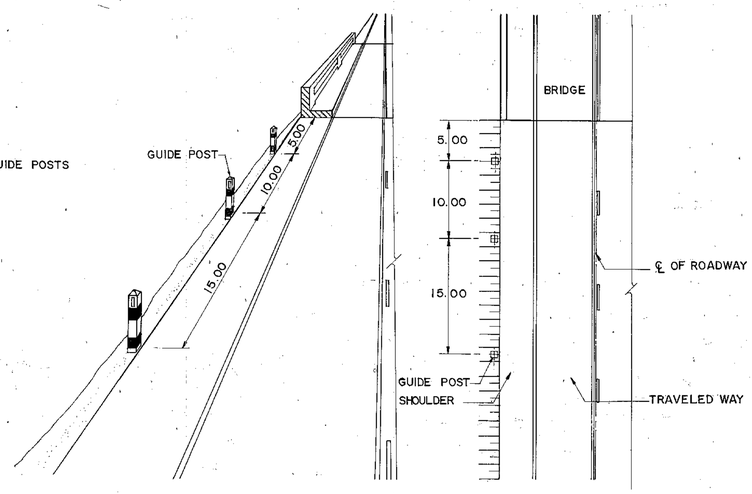


**GUIDE POST INSTALLATION AT BRIDGE APPROACH**
NOT TO SCALE

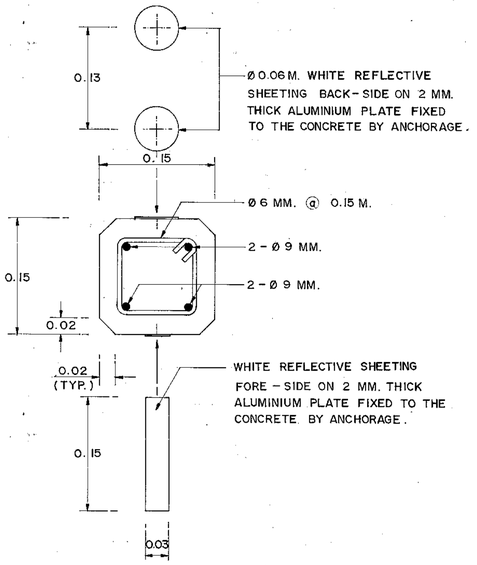


**SECTION (B) - (B) CONCRETE TYPE**
SCALE 1 : 4

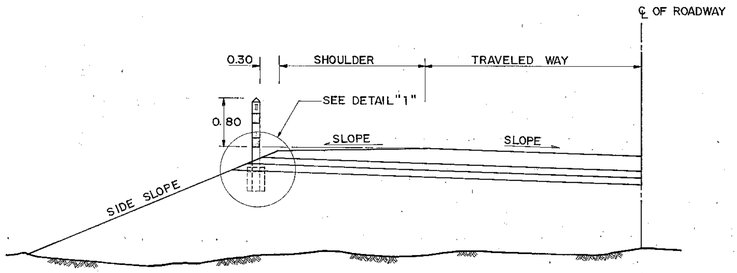


**SECTION (A) - (A) CONCRETE TYPE**
NOT TO SCALE

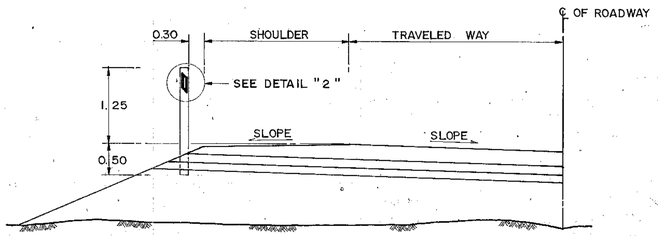


**SECTION (A) - (A) FLEXIBLE TYPE**
NOT TO SCALE

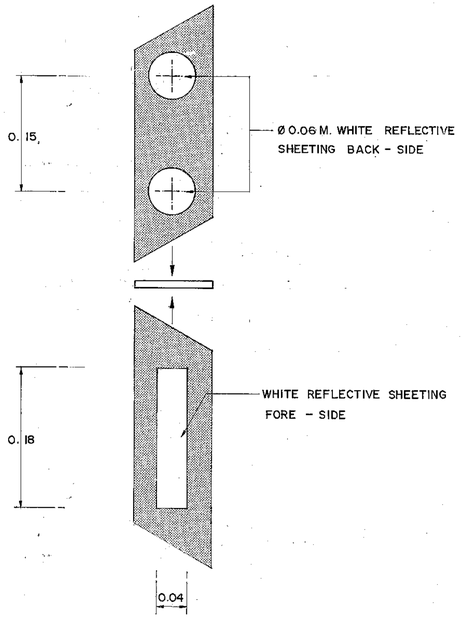


**DETAIL "2"**
SCALE 1 : 4

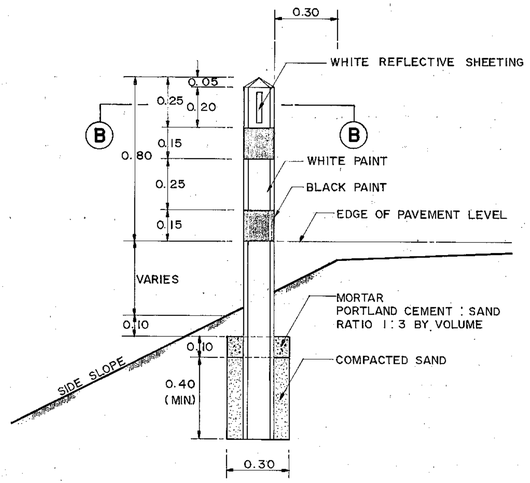


**DETAIL "1"**
SCALE 1 : 15

## TABLE SPACING OF GUIDE POST

| RADIUS OF CURVE (METER) | SPACING OF GUIDE POST (METER) | | | |
|---|---|---|---|---|
| | S | $S_1$ | $S_2$ | $S_3$ |
| 15-74 | 4 | 7 | 12 | 24 |
| 75-99 | 6 | 11 | 18 | 36 |
| 100-149 | 7 | 13 | 21 | 42 |
| 150 199 | 8 | 14 | 24 | 48 |
| 200-299 | 9 | 16 | 27 | 54 |
| 300-499 | 10 | 18 | 30 | 60 |
| 500-999 | 15 | 27 | 45 | 60 |
| 1000-1500 | 21 | 38 | 60 | 60 |

## NOTES :

1. DIMENSIONS ARE IN METERS UNLESS OTHERWISE INDICATED.
2. REFLECTIVE SHEETING SHALL CONFORM TO TIS. 606 TYPE I (ESEFFICIENT OF RETRO-REFLECTION LEVEL 1)
3. BLACK AND WHITE PAINTS SHALL CONFORM TO TIS 327 AND SHALL BE APPLIED ON ALL FACES IN TWO LAYERS.
4. POST SHALL BE ERECTED TRULY VERTICAL.
5. CONCRETE SHALL HAVE A MINIMUM ULTIMATE COMPRESSIVE STRENGTH OF 180 KSC. FOR 15 x 15 x 15 CM. CUBE AT 28 DAYS. AN APPROXIMATE MIX DESIGN PER CUBIC METER IS SUGGESTED AS FOLLOWS :

| | | |
|---|---|---|
| PORTLAND CEMENT TYPE I | 320 | KG. (MIN.) |
| SAND | 0.43 | $M^3$ |
| CRUSHED ROCK OR GRAVEL | 0.86 | $M^3$ |
| CONCRETE SLUMP | 10 | CM. (MAX.) |

6. REINFORCING STEEL SHALL CONFORM TO TIS. 20 GRADE SR. 24

**KINGDOM OF THAILAND**
**MINISTRY OF TRANSPORT AND COMMUNICATIONS**
**DEPARTMENT OF HIGHWAYS**

STANDARD DRAWING

GUIDE POST INSTALLATION

| | | |
|---|---|---|
| DESIGNED : D.O.H. & CONSULTANTS | CHECKED : | DATE JULY 1994 |
| SUBMITTED : (DIRECTOR OF LOCATION & DESIGN DIVISION) | | SCALE AS SHOWN |
| | | DWG. NO. RS-401 |
| APPROVED : (DIRECTOR GENERAL) | | SHEET NO. 37 |

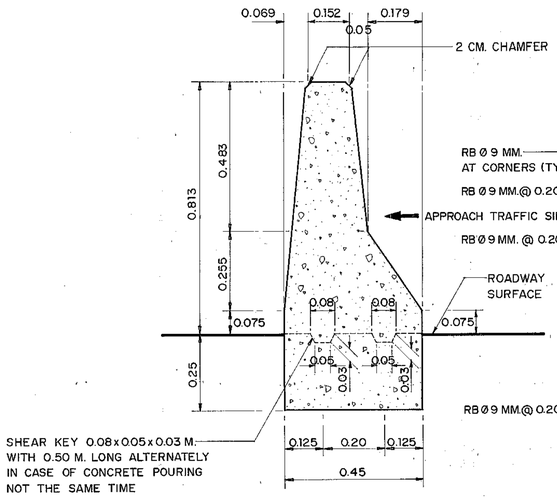


## FRONT ELEVATION OF CONCRETE BARRIER TYPE I

SCALE 1 : 10

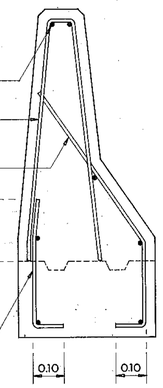


## CONCRETE BARRIER TYPE I REINFORCEMENT DETAIL

SCALE 1 : 10

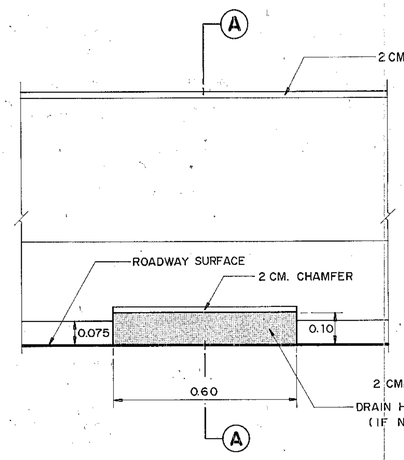


## SIDE ELEVATION OF CONCRETE BARRIER TYPE I

SCALE 1 : 10

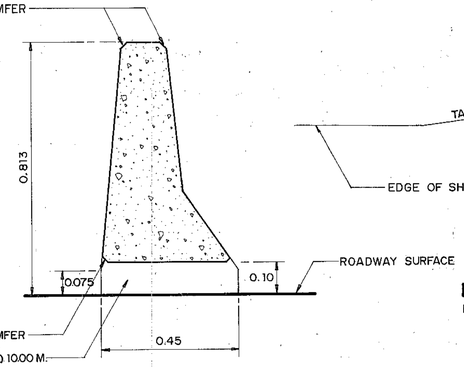


## SECTION (A)-(A)

SCALE 1 : 10

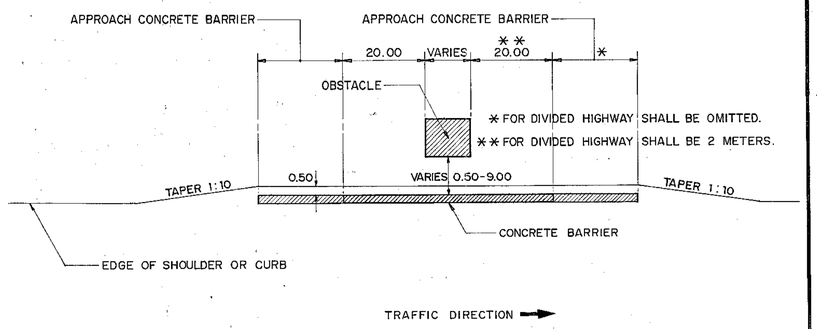


## INSTALLATION OF CONCRETE BARRIER AT OBSTACLE

NOT TO SCALE

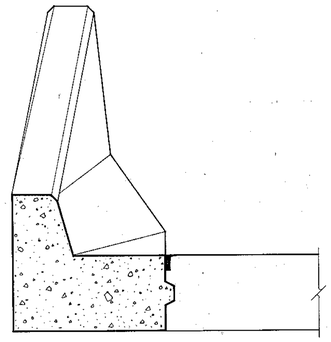

## FRONT ELEVATION OF APPROACH CONCRETE BARRIER TYPE (A)

SCALE 1 : 10

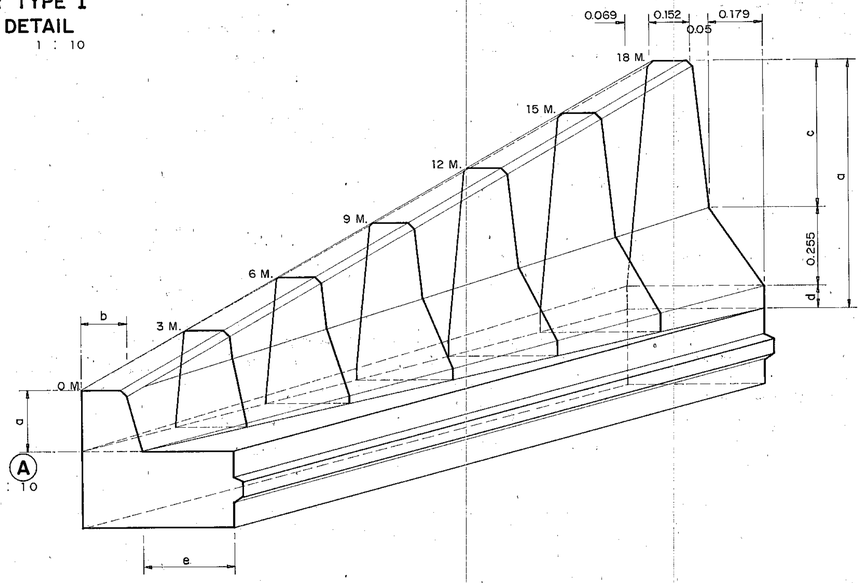


## ISOMETRIC DIAGRAM OF APPROACH CONCRETE BARRIER TYPE (A)

SCALE 1 : 10

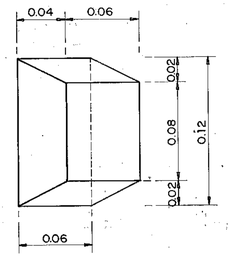


## SHEAR KEY DETAIL

SCALE 1 : 2.5

## NOTES :

1. ALL DIMENSIONS ARE IN METERS UNLESS OTHERWISE INDICATED.
2. CONCRETE SHALL HAVE A MINIMUM ULTIMATE COMPRESSIVE STRENGTH OF 210 KSC. FOR 15x15x15 CM. CUBE AT 28 DAYS. AN APPROXIMATE MIX DESIGN PER CUBIC METER IS SUGGESTED AS FOLLOWS :

| | | |
|---|---|---|
| PORTLAND CEMENT TYPE 1 | 350 | KG. (MIN.) |
| SAND | 0.43 | $M^3$ |
| CRUSHED ROCK OR GRAVEL | 0.86 | $M^3$ |
| CONCRETE SLUMP | 10 | CM. (MAX.) |

3. CLEAR CONCRETE COVER SHALL BE 5 CM.
4. REINFORCING STEEL SHALL CONFORM TO TIS. 20 GRADE SR 24 FOR ROUND BARS AND TIS. 24 GRADE SD 30 FOR DEFORMED BARS.
5. REINFORCEMENT AND OTHER DETAILS OF APPROACH CONCRETE BARRIER SHALL BE THE SAME AS CONCRETE BARRIER.
6. CONSTRUCTION JOINT SHALL BE PROVIDED AT 10.00 M. INTERVAL.
7. EXPANSION JOINT WITH NON-EXTRUDING JOINT FILLER SHALL BE PROVIDED AT 60.00 M. INTERVAL.
8. APPROACH CONCRETE BARRIER SHALL BE PAINTED IN BLACK AND WHITE STRIPE 0.50 M. WIDE, IN TWO COATS. THE PAINT SHALL CONFORM TO TIS. 327.
9. PRE-CAST CONCRETE BARRIER TYPE 1 ACCORDING TO DRAWING NO. RS-504 SHALL BE USED INSTEAD OF CAST-IN-SITU CONCRETE BARRIER.

## TABLE OF DIMENSIONS FOR APPROACH CONCRETE BARRIER TYPE (A)

| TRANSITION DISTANCE ( M. ) | DIMENSIONS ( M. ) | | | | |
|---|---|---|---|---|---|
| | a | b | c | d | e |
| 0 | 0.200 | 0.150 | 0.000 | 0.000 | 0.300 |
| 3 | 0.302 | 0.150 | 0.082 | 0.013 | 0.250 |
| 6 | 0.404 | 0.150 | 0.161 | 0.025 | 0.200 |
| 9 | 0.507 | 0.151 | 0.242 | 0.038 | 0.150 |
| 12 | 0.609 | 0.151 | 0.322 | 0.050 | 0.100 |
| 15 | 0.711 | 0.152 | 0.403 | 0.063 | 0.050 |
| 18 | 0.813 | 0.152 | 0.483 | 0.075 | 0.000 |

## REMARK :

THIS BARRIER IS SUITABLE ONLY IN SPECIFIC LOCATIONS AND CERTAIN CONDITIONS, IT SHOULD BE APPLIED WITH THE FIRM INFORMATIONS CONCERNED AND RECOMMENDED BY THE ENGINEER.

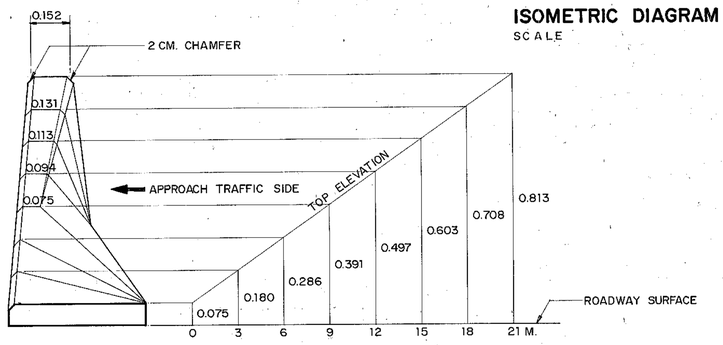


## APPROACH CONCRETE BARRIER TYPE (B)

SCALE 1 : 10

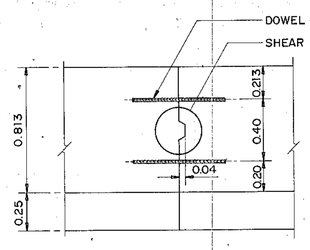


## CONSTRUCTION JOINT DETAIL

SCALE 1 : 20

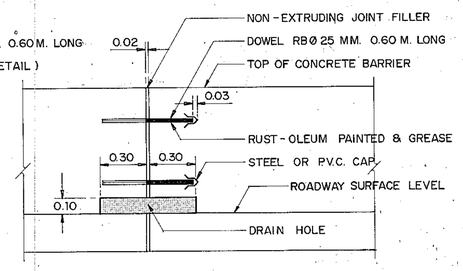


## EXPANSION JOINT DETAIL

SCALE 1 : 20

# KINGDOM OF THAILAND

MINISTRY OF TRANSPORT AND COMMUNICATIONS
DEPARTMENT OF HIGHWAYS

STANDARD DRAWING

CONCRETE BARRIER TYPE I

| | | |
|---|---|---|
| DESIGNED : D.O.H. & CONSULTANTS | CHECKED : | DATE JULY 1994 |
| SUBMITTED : (DIRECTOR OF LOCATION & DESIGN DIVISION) | | SCALE AS SHOWN |
| APPROVED : (DIRECTOR GENERAL) | | DWG. NO. RS-501 |
| | | SHEET NO. 38 |

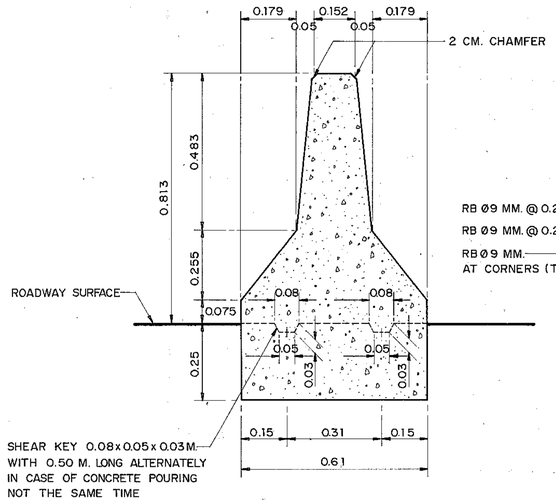


## FRONT ELEVATION OF CONCRETE BARRIER TYPE II

SCALE 1 : 10

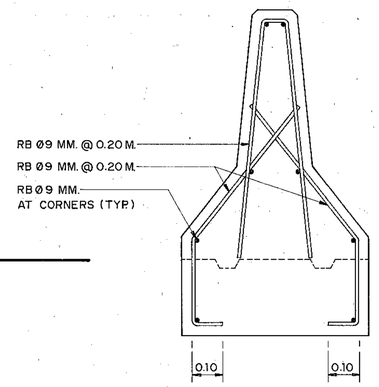


## CONCRETE BARRIER TYPE II REINFORCEMENT DETAIL

SCALE 1 : 10

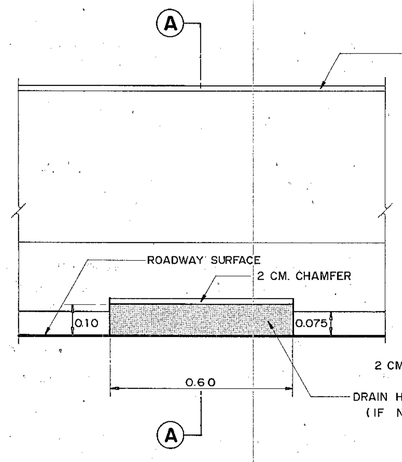


## SIDE ELEVATION OF CONCRETE BARRIER TYPE II

SCALE 1 : 10

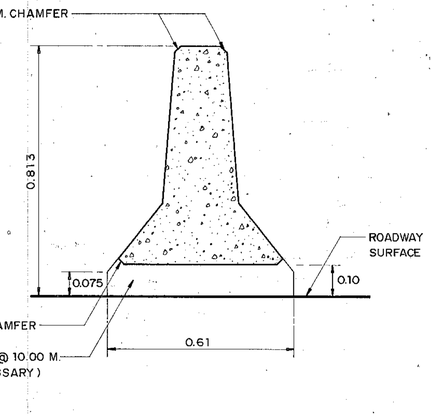


## SECTION (A)-(A)

SCALE 1 : 10

## NOTES :

1. ALL DIMENSIONS ARE IN METERS UNLESS OTHERWISE INDICATED.
2. CONCRETE SHALL HAVE A MINIMUM ULTIMATE COMPRESSIVE STRENGTH OF 210 KSC. FOR 15x15x15 CM. CUBE AT 28 DAYS. AN APPROXIMATE MIX DESIGN PER CUBIC METER IS SUGGESTED AS FOLLOWS :

| | | |
|---|---|---|
| PORTLAND CEMENT TYPE 1 | 350 | KG. (MIN.) |
| SAND | 0.43 | $M.^3$ |
| CRUSHED ROCK OR GRAVEL | 0.86 | $M.^3$ |
| CONCRETE SLUMP | 10 | CM. (MAX.) |

3. CLEAR CONCRETE COVER SHALL BE 5 CM.
4. REINFORCING STEEL SHALL CONFORM TO TIS. 20 GRADE SR 24 FOR ROUND BARS AND TIS. 24 GRADE SD 30 FOR DEFORMED BARS.
5. REINFORCEMENT AND OTHER DETAILS OF APPROACH CONCRETE BARRIER SHALL BE THE SAME AS CONCRETE BARRIER.
6. CONSTRUCTION JOINT SHALL BE PROVIDED AT 10.00 M. INTERVAL.
7. EXPANSION JOINT WITH NON-EXTRUDING JOINT FILLER SHALL BE PROVIDED AT 60.00 M. INTERVAL.
8. APPROACH CONCRETE BARRIER SHALL BE PAINTED IN BLACK AND WHITE STRIPE 0.50 M. WIDE, IN TWO COATS. THE PAINT SHALL CONFORM TO TIS. 327.
9. PRE-CAST CONCRETE BARRIER TYPE II ACCORDING TO DRAWING NO. RS-505 SHALL BE USED INSTEAD OF CAST-IN-SITU CONCRETE BARRIER.

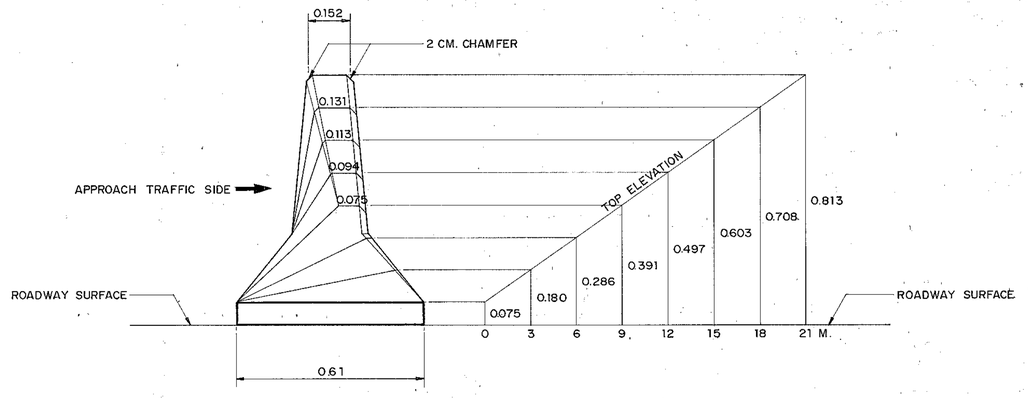


## APPROACH CONCRETE BARRIER TYPE (C)

SCALE 1 : 10

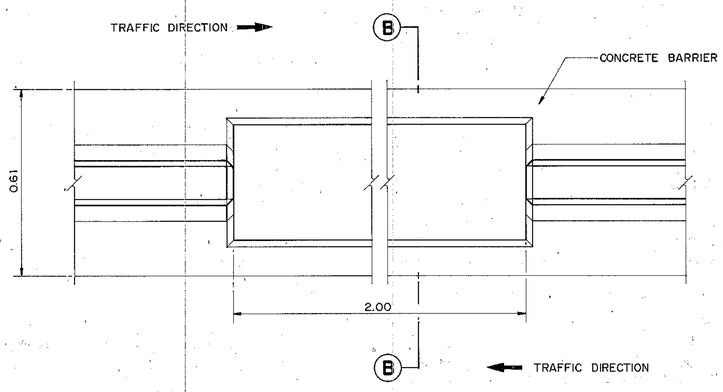


## PLAN OF CONCRETE BARRIER OPENING FOR PEDESTRIAN CROSS WALK

SCALE 1 : 10

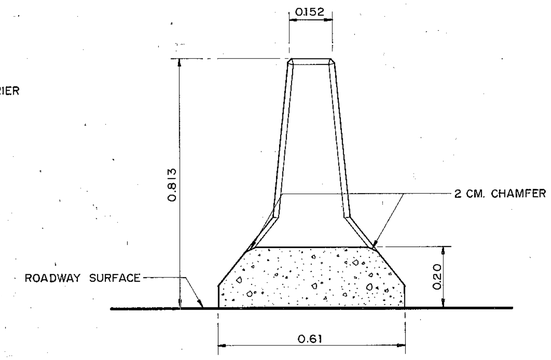


## SECTION (B)-(B)

SCALE 1 : 10

## REMARK :

THIS BARRIER IS SUITABLE ONLY IN SPECIFIC LOCATIONS AND CERTAIN CONDITIONS, IT SHOULD BE APPLIED WITH THE FIRM INFORMATIONS CONCERNED AND RECOMMENDED BY THE ENGINEER.

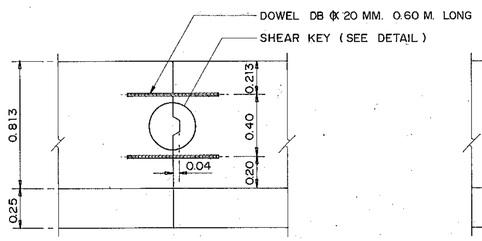


## CONSTRUCTION JOINT DETAIL

SCALE 1 : 20

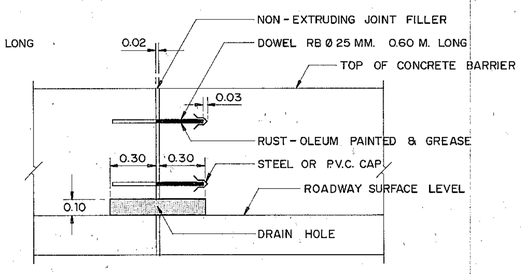


## EXPANSION JOINT DETAIL

SCALE 1 : 20

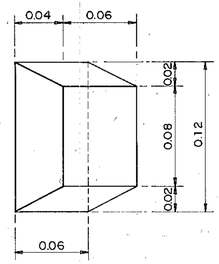


## SHEAR KEY DETAIL

SCALE 1 : 2.5

# KINGDOM OF THAILAND
MINISTRY OF TRANSPORT AND COMMUNICATIONS
DEPARTMENT OF HIGHWAYS

STANDARD DRAWING

CONCRETE BARRIER TYPE II

| | | |
|---|---|---|
| DESIGNED : D.O.H. & CONSULTANTS | CHECKED : | DATE JULY 1994 |
| SUBMITTED : (DIRECTOR OF LOCATION & DESIGN DIVISION) | | SCALE AS SHOWN |
| APPROVED : (DIRECTOR GENERAL) | | DWG. NO. RS-502 |
| | | SHEET NO. 39 |

**REMARK :** THIS BARRIER IS SUITABLE ONLY IN SPECIFIC LOCATIONS AND CERTAIN CONDITIONS, IT SHOULD BE APPLIED WITH THE FIRM INFORMATIONS CONCERNED AND RECOMMENDED BY THE ENGINEER.

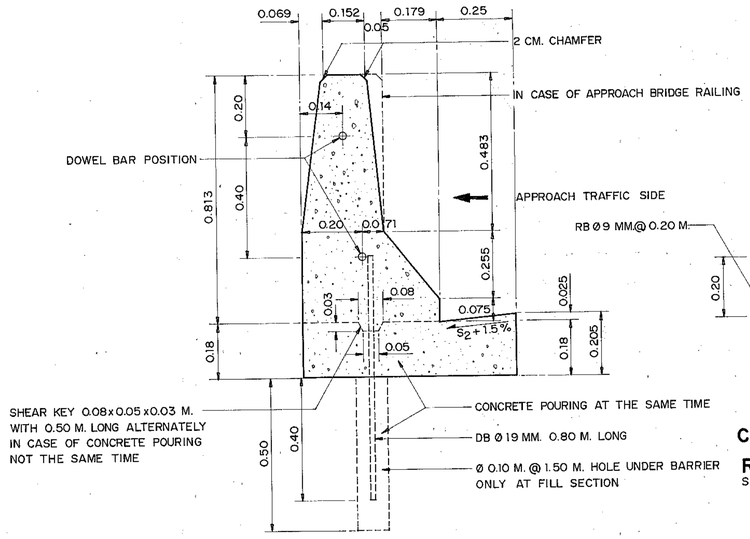


## FRONT ELEVATION OF CONCRETE BARRIER TYPE I

SCALE 1 : 10

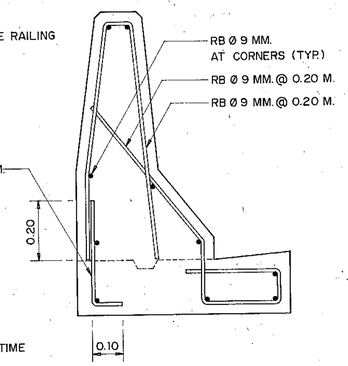


## CONCRETE BARRIER TYPE I REINFORCEMENT DETAIL

SCALE 1 : 10

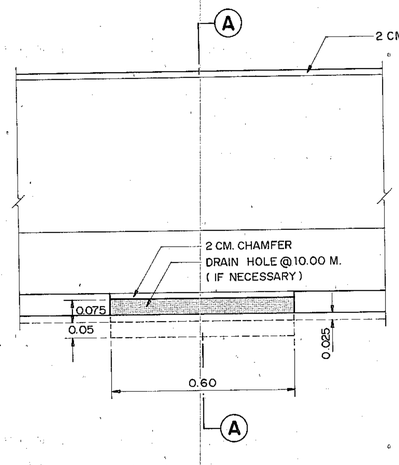


## SIDE ELEVATION OF CONCRETE BARRIER TYPE I

SCALE 1 : 10

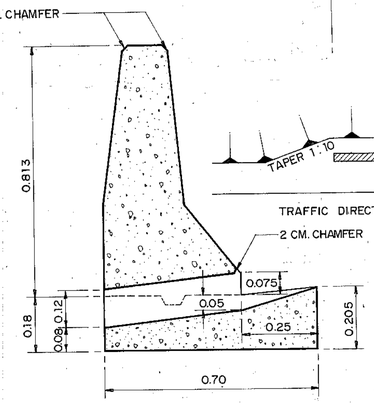


## SECTION (A)-(A)

SCALE 1 : 10

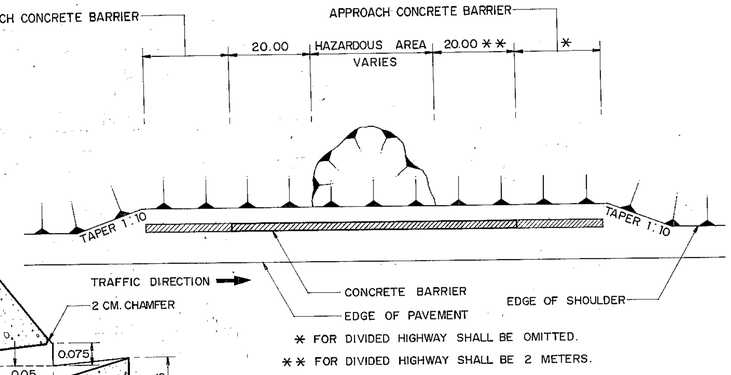


## INSTALLATION OF CONCRETE BARRIER

NOT TO SCALE

## NOTES :

1. ALL DIMENSIONS ARE IN METERS UNLESS OTHERWISE INDICATED.
2. CONCRETE SHALL HAVE A MINIMUM ULTIMATE COMPRESSIVE STRENGTH OF 210 KSC. FOR 15x15x15 CM. CUBE AT 28 DAYS. AN APPROXIMATE MIX DESIGN PER CUBIC METER IS SUGGESTED AS FOLLOWS :

| | | |
|---|---|---|
| PORTLAND CEMENT TYPE 1 | 350 | KG. ( MIN. ) |
| SAND | 0.43 | $M^3$ |
| CRUSHED ROCK OR GRAVEL | 0.86 | $M^3$ |
| CONCRETE SLUMP | 10 | CM. ( MAX. ) |

3. CLEAR CONCRETE COVER SHALL BE 5 CM.
4. REINFORCING STEEL SHALL CONFORM TO TIS. 20 GRADE SR 24 FOR ROUND BARS AND TIS. 24 GRADE SD 30 FOR DEFORMED BARS.
5. REINFORCEMENT AND OTHER DETAILS OF APPROACH CONCRETE BARRIER SHALL BE THE SAME AS CONCRETE BARRIER.
6. CONSTRUCTION JOINT SHALL BE PROVIDED AT 10.00 M. INTERVAL.
7. EXPANSION JOINT WITH NON - EXTRUDING JOINT FILLER SHALL BE PROVIDED AT 60.00 M. INTERVAL AND / OR DRAIN CHUTE POSITION.
8. OUTLET OF CONCRETE BARRIER AT OUTER EDGE SHALL NOT BE CONSTRUCTED WHERE SHOULDER SLOPES TOWARD INNER EDGE AND EXPANSION JOINT SHALL BE PROVIDED NOT MORE THAN 30.00 M. INTERVAL.
9. APPROACH CONCRETE BARRIER SHALL BE PAINTED IN BLACK AND WHITE STRIPE 0.50 M. WIDE, IN TWO COATS. THE PAINT SHALL CONFORM TO TIS. 327.

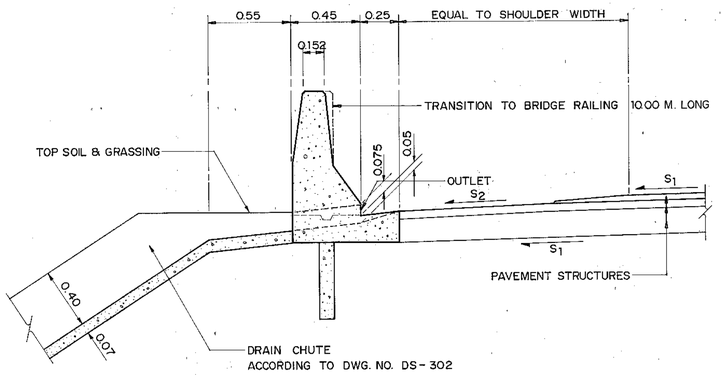


## CONCRETE BARRIER TYPE I AT HIGH FILL SECTION

SCALE 1 : 20

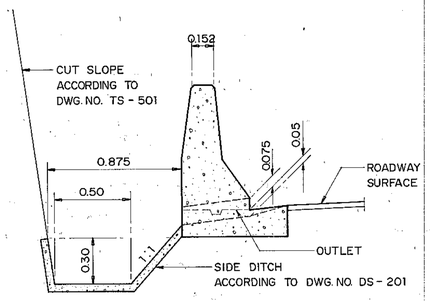


## CONCRETE BARRIER TYPE I AT DEEP CUT SECTION

SCALE 1 : 20

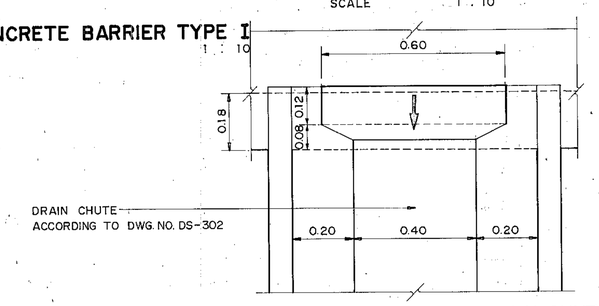


## DETAIL OF OUTLET WITH DRAIN CHUTE

SCALE 1 : 10

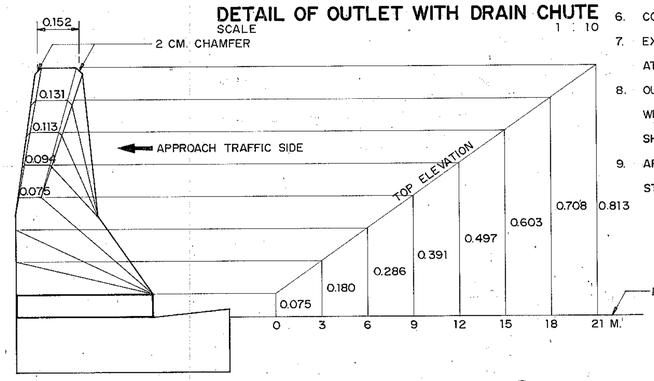


## APPROACH CONCRETE BARRIER TYPE (D)

SCALE 1 : 10

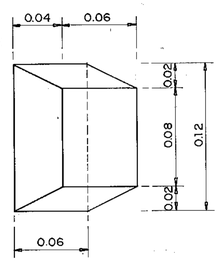


## SHEAR KEY DETAIL

SCALE 1 : 2.5

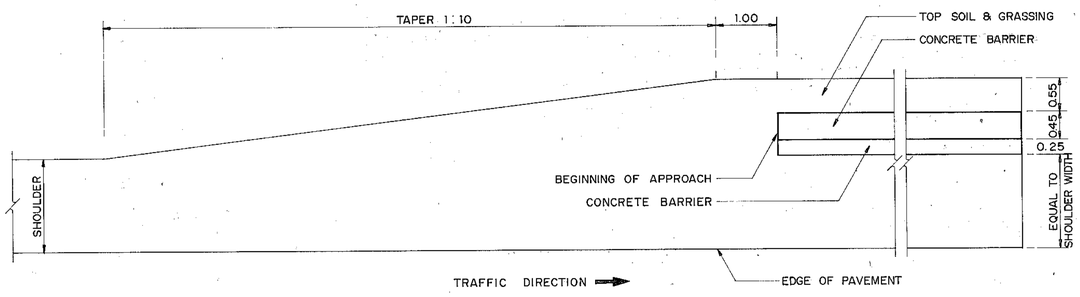


## SHOULDER TRANSITION AT APPROACH CONCRETE BARRIER

SCALE 1 : 50

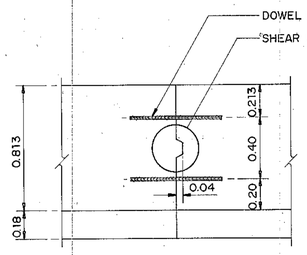


## CONSTRUCTION JOINT DETAIL

SCALE 1 : 20

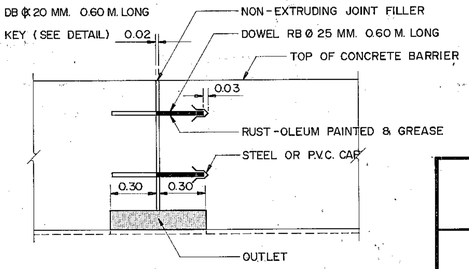


## EXPANSION JOINT DETAIL

SCALE 1 : 20

# KINGDOM OF THAILAND

MINISTRY OF TRANSPORT AND COMMUNICATIONS
DEPARTMENT OF HIGHWAYS

STANDARD DRAWING

CONCRETE BARRIER TYPE I
FOR DEEP CUT AND HIGH FILL SECTION

| | | |
|---|---|---|
| DESIGNED : D.O.H. & CONSULTANTS | CHECKED : | DATE JULY 1994 |
| SUBMITTED : (DIRECTOR OF LOCATION & DESIGN DIVISION) | | SCALE AS SHOWN |
| APPROVED : (DIRECTOR GENERAL) | | DWG. NO. RS-503 |
| | | SHEET NO. 40 |

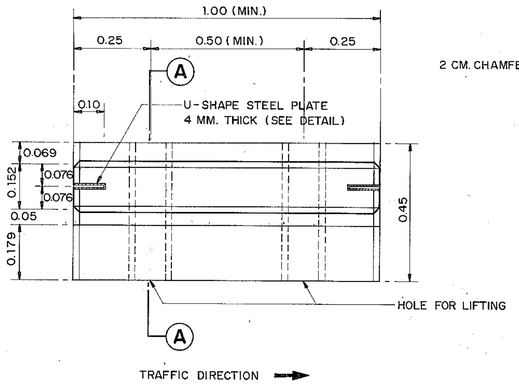


## PLAN
SCALE 1 : 10

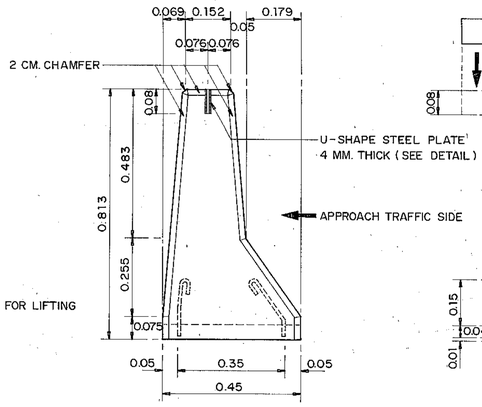


## FRONT ELEVATION
SCALE 1 : 10

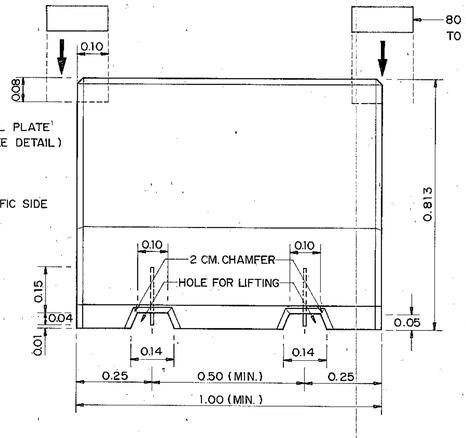


## SIDE ELEVATION
SCALE 1 : 10

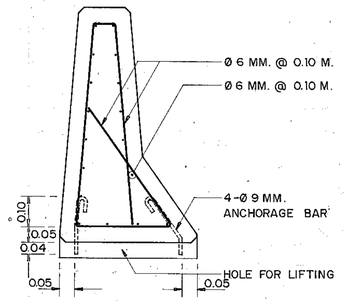


## REINFORCEMENT DETAIL
SCALE 1 : 10

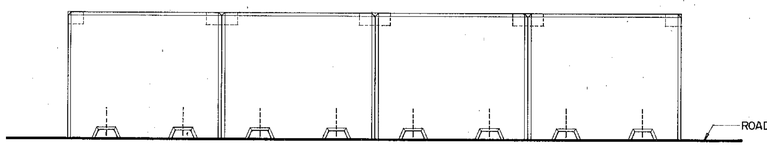


## INSTALLATION
SCALE 1 : 20

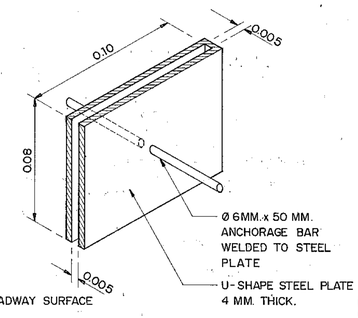


## DETAIL OF U-SHAPE STEEL PLATE
SCALE 1 : 2

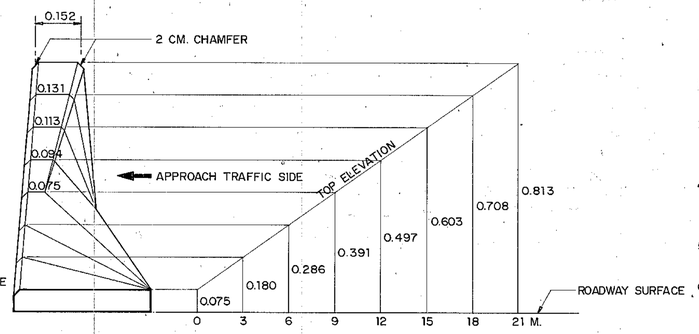


## APPROACH CONCRETE BARRIER
SCALE 1 : 10

## GENERAL NOTES :

1. ALL DIMENSIONS ARE IN METERS UNLESS OTHERWISE INDICATED.
2. CONCRETE SHALL HAVE A MINIMUM ULTIMATE COMPRESSIVE STRENGTH OF 350 KSC. FOR 15 x 15 x 15 CM. CUBE AT 28 DAYS. AN APPROXIMATE MIX DESIGN PER CUBIC METER IS SUGGESTED AS FOLLOWS :

| | |
|---|---|
| PORTLAND CEMENT TYPE 1 | 375 KG. (MIN.) |
| SAND | 0.43 $M^3$ |
| CRUSHED ROCK OR GRAVEL | 0.86 $M^3$ |
| CONCRETE SLUMP | 10 CM. (MAX.) |

3. CLEAR CONCRETE COVER SHALL BE 5 CM.
4. REINFORCING STEEL SHALL CONFORM TO TIS. 20 GRADE SR. 24
5. STRUCTURAL STEEL SECTION SHALL CONFORM TO TIS. 116 GRADE Fe 24, PAINTED WITH RUSTPROOF RUST - OLEUM PAINT OR EQUIVALENT TWICE.
6. PRE - CAST CONCRETE BARRIER TYPE I SHALL CONFORM TO ASTM C 825 - 79 ( REAPPROVED 1985 ) STANDARD SPECIFICATION FOR PRE - CAST CONCRETE BARRIER.
7. METHOD AND TYPE OF WELDING TO CONNECT EACH CONCRETE BARRIER SEGMENT WHICH STRONGER THAN THAT SHOWN IN THIS DRAWING MAY BE USED AS APPROVED BY THE ENGINEER.
8. APPROACH CONCRETE BARRIER SHALL BE PAINTED IN BLACK AND WHITE STRIPE 0.50 M. WIDE, IN TWO COATS. THE PAINT SHALL CONFORM TO TIS. 327.
9. IF NECESSARY, DRAIN HOLE SIZE 0.40 M. WIDE, 0.10 M. HIGH SHALL BE APPLIED FOR DRAINAGE.

## PERMANENT INSTALLATION :

### METHOD OF INSTALLATION :

1. 0.20 M. BASE SHALL BE CASTED - IN - SITU WITH INSERTING ANCHORAGE BAR AS SHOWN IN THE FIGURE.
2. GENERALLY THICKNESS OF THE BASE SHALL BE 0.20 M., FOR CONCRETE PAVEMENT THE THICKNESS SHALL EQUAL TO THICKNESS OF CONCRETE PAVEMENT.
3. GENERALLY WIDTH OF THE BASE SHALL BE 0.45 M., IF EDGE OF PAVEMENT CONSTRUCTED ADJACENT TO CONCRETE BARRIER, THE WIDTH SHALL BE ADJUSTED TO 1.45 M. MINIMUM.
4. PRE-CAST CONCRETE BARRIER SHALL BE LIFTED AT HOLE FOR LIFTING TO INSTALLED. THE ANCHORAGE BARS SHALL BE IN THE SAME POSITION IF NOT, THE CONCRETE BASE SHALL BE ADJUSTED.
5. BOTH ANCHORAGE BARS SHALL WELDED TOGETHER WITH WELDING LENGTH NOT LESS THAN 2.5 CM.
6. 80 x 198 x 4 MM. STEEL PLATE SHALL BE INSERTED INTO U - SHAPE STEEL PLATE. BOTH STEEL PLATES SHALL BE WELDED TOGETHER. THE WELDING FILLED FULLY U - SHAPE STEEL PLATE TO WATERPROOF, PAINTED WITH RUSTPROOF RUST - OLEUM PAINT OR EQUIVALENT TWICE AND WITH GRAY OIL PAINT TWICE ( TIS. 327 ).
7. THE HOLE FOR LIFTING SHALL BE FILLED FULLY WITH CONCRETE RATIO 1 : 2 : 4 BY VOLUME, THE OUTER FACE SHALL BE SMOOTH.
8. JOINTS SHALL BE DECORATED SMOOTHLY BY MORTAR RATIO 1 : 3 BY VOLUME.
9. DRAIN HOLE AT 10.00 M. SPACING SHALL BE APPLIED IN CASE OF DRAINAGE REQUIREMENT.

## TEMPORARY INSTALLATION :

### METHOD OF INSTALLATION :

1. PRE - CAST CONCRETE BARRIER SHALL BE LIFTED AT HOLE FOR LIFTING TO INSTALLED. THE ANCHORAGE BARS SHALL BE IN THE SAME POSITION IF NOT, THE CONCRETE BASE SHALL BE ADJUSTED.
2. 80 x 198 x 4 MM. STEEL PLATE SHALL BE INSERTED INTO U - SHAPE STEEL PLATE, NOT BE WELDED TOGETHER. THE STEEL PLATES SHALL BE PAINTED WITH RUSTPROOF RUST - OLEUM PAINT OR EQUIVALENT TWICE AND WITH GRAY OIL PAINT TWICE ( TIS. 327 ).
3. TEMPORARY INSTALLATION SHALL BE USED AS NECESSARY ONLY BECAUSE LACK OF STRENGTH. THE CONCRETE BARRIER SHALL BE REMOVED IMMEDIATELY IF NOT USED OR CONVERTED TO PERMANENT INSTALLATION AS SOON AS.

## REMARK :

THIS BARRIER IS SUITABLE ONLY IN SPECIFIC LOCATIONS AND CERTAIN CONDITIONS, IT SHOULD BE APPLIED WITH THE FIRM INFORMATIONS CONCERNED AND RECOMMENDED BY THE ENGINEER.

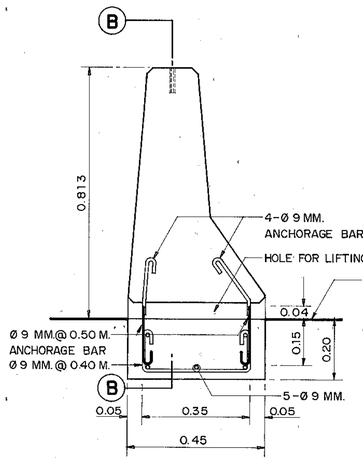


SECTION (A)-(A)

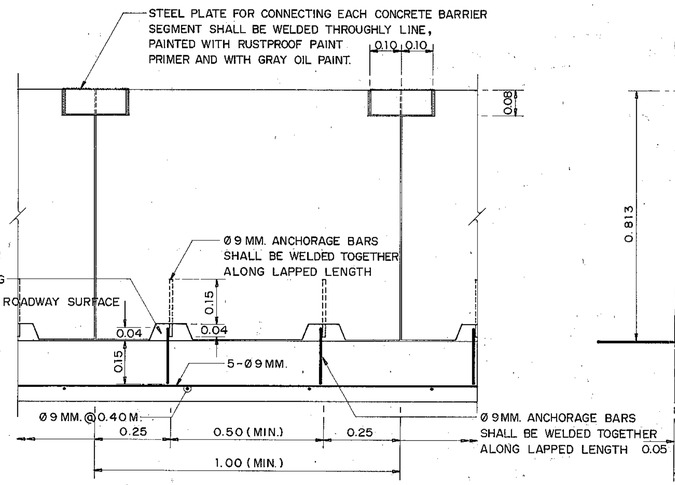


SECTION (B)-(B)

## PERMANENT INSTALLATION
SCALE 1 : 10

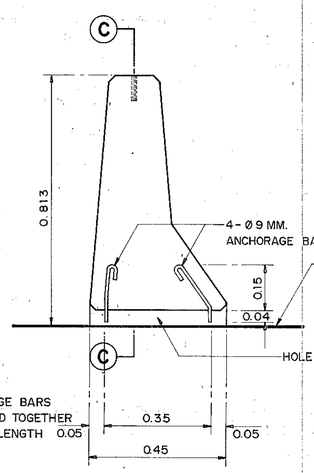


SECTION (A)-(A)

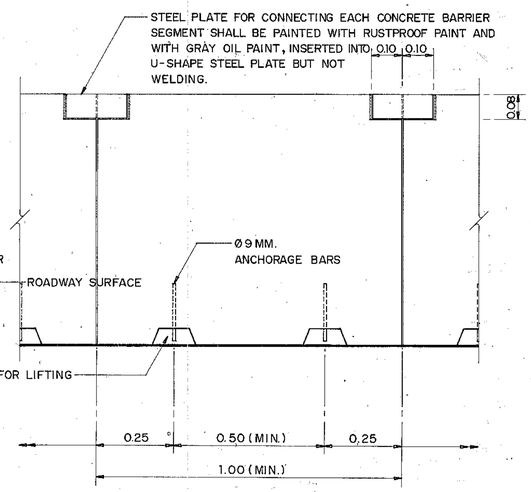


SECTION (C)-(C)

## TEMPORARY INSTALLATION
SCALE 1 : 10

# KINGDOM OF THAILAND
MINISTRY OF TRANSPORT AND COMMUNICATIONS
DEPARTMENT OF HIGHWAYS

STANDARD DRAWING

PRE-CAST CONCRETE BARRIER TYPE I

| | | |
|---|---|---|
| DESIGNED : D.O.H. & CONSULTANTS | CHECKED : | DATE JULY 1994 |
| SUBMITTED : (DIRECTOR OF LOCATION & DESIGN DIVISION) | | SCALE AS SHOWN |
| APPROVED : (DIRECTOR GENERAL) | | DWG. NO. RS-504 |
| | | SHEET NO. 41 |

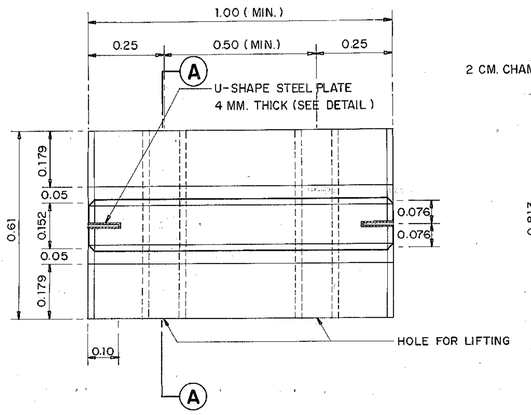


## PLAN
SCALE 1 : 10

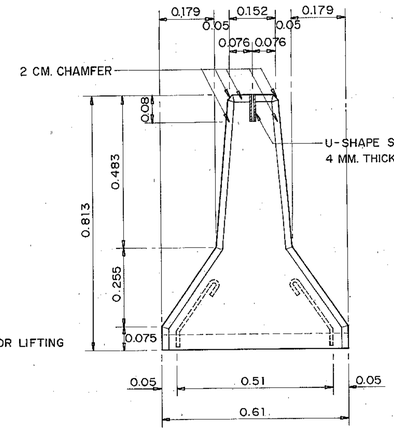


## FRONT ELEVATION
SCALE 1 : 10

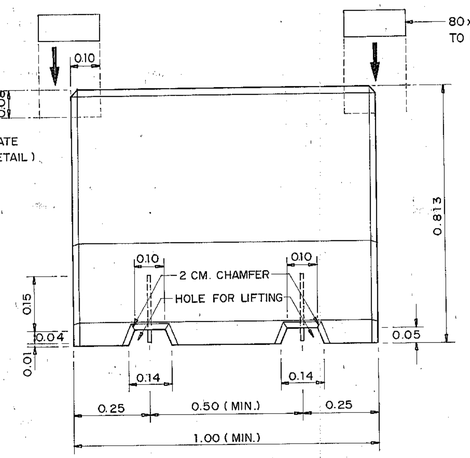


## SIDE ELEVATION
SCALE 1 : 10

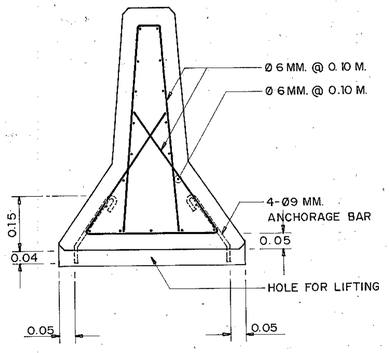


## REINFORCEMENT DETAIL
SCALE 1 : 10

## GENERAL NOTES :

1. ALL DIMENSIONS ARE IN METERS UNLESS OTHERWISE INDICATED.
2. CONCRETE SHALL HAVE A MINIMUM ULTIMATE COMPRESSIVE STRENGTH OF 350 KSC. FOR 15 x 15 x 15 CM. CUBE AT 28 DAYS. AN APPROXIMATE MIX DESIGN PER CUBIC METER IS SUGGESTED AS FOLLOWS :

| | |
|---|---|
| PORTLAND CEMENT TYPE 1 | 375 KG. ( MIN. ) |
| SAND | 0.43 $M^3$ |
| CRUSHED ROCK OR GRAVEL | 0.86 $M^3$ |
| CONCRETE SLUMP | 10 CM. ( MAX. ) |

3. CLEAR CONCRETE COVER SHALL BE 5 CM.
4. REINFORCING STEEL SHALL CONFORM TO TIS. 20 GRADE SR. 24
5. STRUCTURAL STEEL SECTION SHALL CONFORM TO TIS. 116 GRADE Fe 24, PAINTED WITH RUSTPROOF RUST - OLEUM PAINT OR EQUIVALENT TWICE.
6. PRE - CAST CONCRETE BARRIER TYPE II SHALL CONFORM TO ASTM. C 825 - 79 ( REAPPROVED 1985 ) STANDARD SPECIFICATION FOR PRE - CAST CONCRETE BARRIER.
7. METHOD AND TYPE OF WELDING TO CONNECT EACH CONCRETE BARRIER SEGMENT WHICH STRONGER THAN THAT SHOWN IN THIS DRAWING MAY BE USED AS APPROVED BY THE ENGINEER.
8. APPROACH CONCRETE BARRIER SHALL BE PAINTED IN BLACK AND WHITE STRIPE 0.50 M. WIDE, IN TWO COATS. THE PAINT SHALL CONFORM TO TIS. 327.
9. IF NECESSARY, DRAIN HOLE SIZE 0.40 M. WIDE, 0.10 M. HIGH SHALL BE APPLIED FOR DRAINAGE.

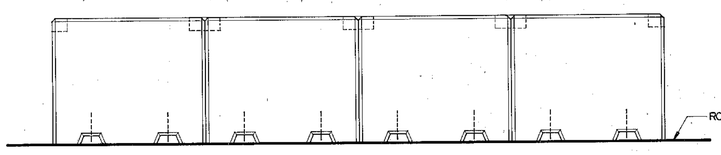


## INSTALLATION
SCALE 1 : 20

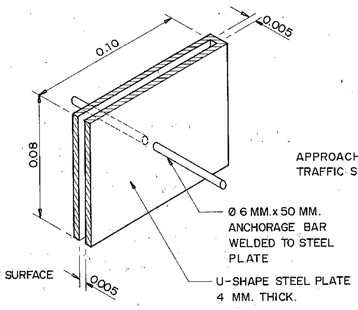


## DETAIL OF U-SHAPE STEEL PLATE
SCALE 1 : 2

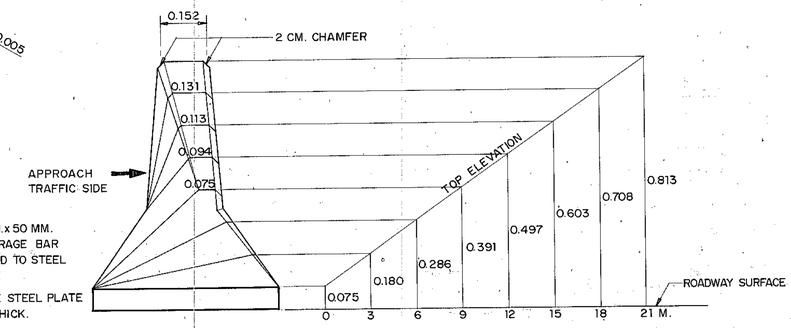


## APPROACH CONCRETE BARRIER
SCALE 1 : 10

## PERMANENT INSTALLATION :

### METHOD OF INSTALLATION :

1. 0.20 M. BASE SHALL BE CASTED - IN - SITU WITH INSERTING ANCHORAGE BAR AS SHOWN IN THE FIGURE.
2. GENERALLY THICKNESS OF THE BASE SHALL BE 0.20 M. FOR CONCRETE PAVEMENT THE THICKNESS SHALL EQUAL TO THICKNESS OF CONCRETE PAVEMENT.
3. PRE - CAST CONCRETE BARRIER SHALL BE LIFTED AT HOLE FOR LIFTING TO INSTALLED. THE ANCHORAGE BARS SHALL BE IN THE SAME POSITION IF NOT, THE CONCRETE BASE SHALL BE ADJUSTED.
4. BOTH ANCHORAGE BARS SHALL WELDED TOGETHER WITH WELDING LENGTH NOT LESS THAN 2.5 CM.
5. 80 x 198 x 4 MM. STEEL PLATE SHALL BE INSERTED INTO U - SHAPE STEEL PLATE. BOTH STEEL PLATES SHALL BE WELDED TOGETHER. THE WELDING FILLED FULLY U - SHAPE STEEL PLATE TO WATERPROOF, PAINTED WITH RUSTPROOF RUST - OLEUM PAINT OR EQUIVALENT TWICE AND WITH GRAY OIL PAINT TWICE ( TIS. 327 ).
6. THE HOLE FOR LIFTING SHALL BE FILLED FULLY WITH CONCRETE RATIO 1 : 2 : 4 BY VOLUME, THE OUTER FACE SHALL BE SMOOTH.
7. JOINTS SHALL BE DECORATED SMOOTHLY BY MORTAR RATIO 1 : 3 BY VOLUME.
8. DRAIN HOLE AT 10.00 M. SPACING SHALL BE APPLIED IN CASE OF DRAINAGE REQUIREMENT.

## TEMPORARY INSTALLATION :

### METHOD OF INSTALLATION :

1. PRE - CAST CONCRETE BARRIER SHALL BE LIFTED AT HOLE FOR LIFTING TO INSTALLED. THE ANCHORAGE BARS SHALL BE IN THE SAME POSITION IF NOT, THE CONCRETE BASE SHALL BE ADJUSTED.
2. 80 x 198 x 4 MM. STEEL PLATE SHALL BE INSERTED INTO U - SHAPE STEEL PLATE, NOT BE WELDED TOGETHER. THE STEEL PLATES SHALL BE PAINTED WITH RUSTPROOF RUST - OLEUM PAINT OR EQUIVALENT TWICE AND WITH GRAY OIL PAINT TWICE ( TIS. 327 ).
3. TEMPORARY INSTALLATION SHALL BE USED AS NECESSARY ONLY BECAUSE LACK OF STRENGTH. THE CONCRETE BARRIER SHALL BE REMOVED IMMEDIATELY IF NOT USED OR CONVERTED TO PERMANENT INSTALLATION AS SOON AS.

## REMARK :

THIS BARRIER IS SUITABLE ONLY IN SPECIFIC LOCATIONS AND CERTAIN CONDITIONS, IT SHOULD BE APPLIED WITH THE FIRM INFORMATIONS CONCERNED AND RECOMMENDED BY THE ENGINEER.

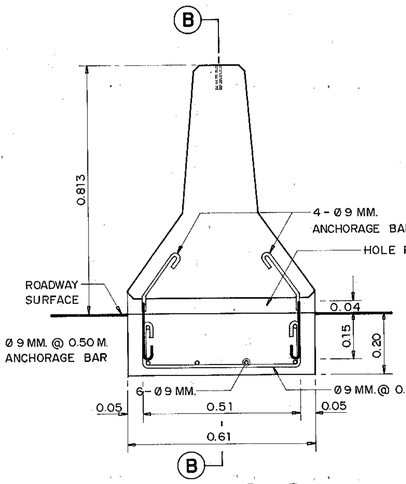


## SECTION (A)-(A)

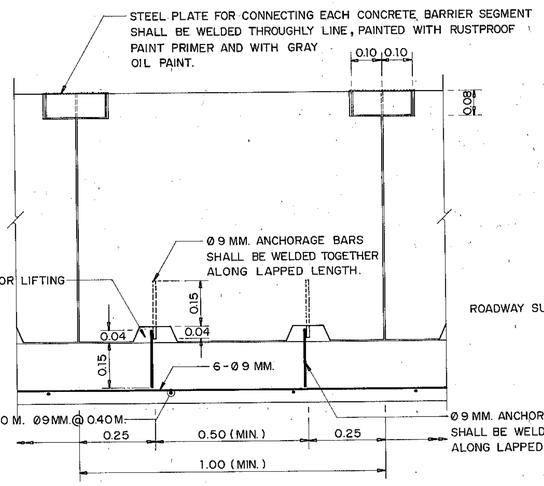


## SECTION (B)-(B)

## PERMANENT INSTALLATION
SCALE 1 : 10

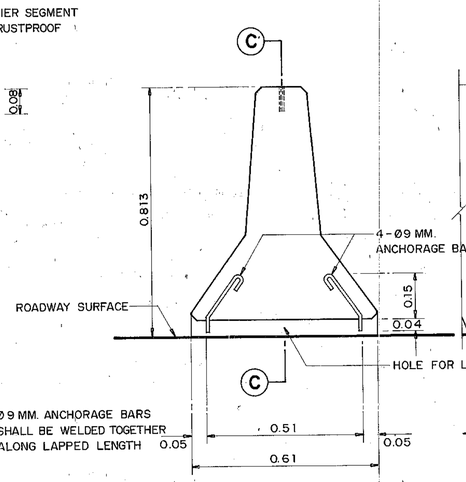


## SECTION (A)-(A)

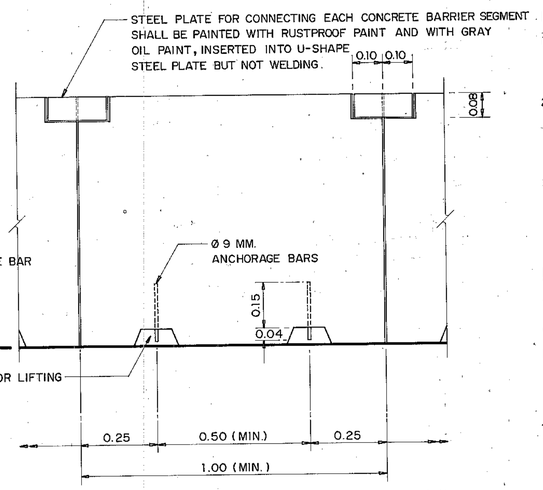


## SECTION (C)-(C)

## TEMPORARY INSTALLATION
SCALE 1 : 10

# KINGDOM OF THAILAND
MINISTRY OF TRANSPORT AND COMMUNICATIONS
DEPARTMENT OF HIGHWAYS

STANDARD DRAWING

PRE - CAST CONCRETE BARRIER TYPE II

| | | |
|---|---|---|
| DESIGNED : D.O.H & CONSULTANTS | CHECKED : | DATE JULY 1994 |
| SUBMITTED : (DIRECTOR OF LOCATION & DESIGN DIVISION) | | SCALE AS SHOWN |
| | | DWG. NO. RS - 505 |
| APPROVED : (DIRECTOR GENERAL) | | SHEET NO. 42 |

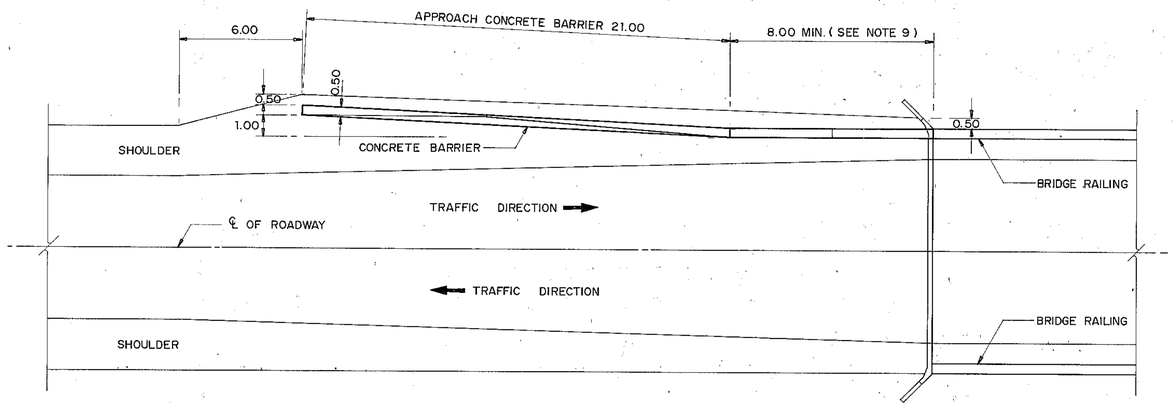


## CONCRETE BARRIER AT BRIDGE APPROACH FOR TWO-WAY TRAFFIC
SCALE 1 : 150

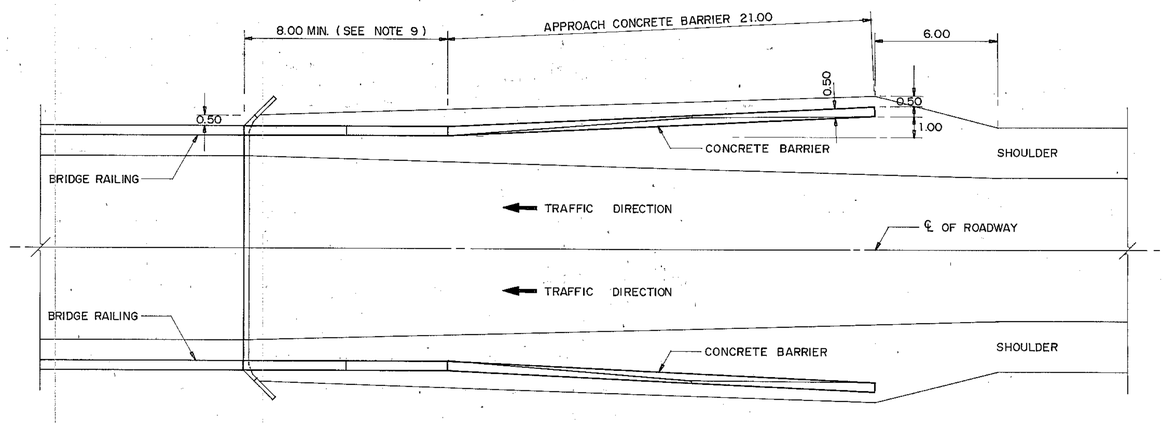


## CONCRETE BARRIER AT BRIDGE APPROACH FOR DIVIDED HIGHWAY
SCALE 1 : 150

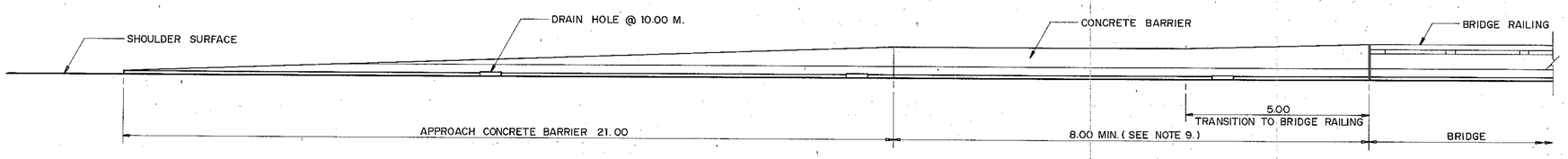


## SIDE ELEVATION
SCALE 1 : 75

## NOTES :

1. ALL DIMENSIONS ARE IN METERS UNLESS OTHERWISE INDICATED.
2. CONCRETE SHALL HAVE A MINIMUM ULTIMATE COMPRESSIVE STRENGTH OF 210 KSC. FOR 15 x 15 x 15 CM. CUBE AT 28 DAYS. AN APPROXIMATE MIX DESIGN PER CUBIC METER IS SUGGESTED AS FOLLOWS :

| | | |
|---|---|---|
| PORTLAND CEMENT TYPE 1 | 350 | KG (MIN.) |
| SAND | 0.43 | $M^3$ |
| CRUSHED ROCK OR GRAVEL | 0.86 | $M^3$ |
| CONCRETE SLUMP | 10 | CM. (MAX.) |

3. CLEAR CONCRETE COVER SHALL BE 5 CM.
4. REINFORCING STEEL SHALL CONFORM TO TIS. 20 GRADE SR 24 FOR ROUND BARS AND TIS. 24 GRADE SD 30 FOR DEFORMED BARS.
5. REINFORCEMENT AND OTHER DETAILS OF APPROACH CONCRETE BARRIER SHALL BE THE SAME AS CONCRETE BARRIER.
6. CONSTRUCTION JOINT SHALL BE PROVIDED AT 10.00 M. INTERVAL.
7. EXPANSION JOINT WITH NON-EXTRUDING JOINT FILLER SHALL BE PROVIDED AT 60.00 M. INTERVAL.
8. APPROACH CONCRETE BARRIER SHALL BE PAINTED IN BLACK AND WHITE STRIPE 0.50 M. WIDE, IN TWO COATS. THE PAINT SHALL CONFORM TO TIS. 327.
9. THE LENGTH SHALL BE BETWEEN BRIDGE ABUTMENT AND POSITION AT EMBANKMENT 2.50 M. HIGH, BUT NOT LESS THAN 8.00 M. IN CASE OF DEEP CUT AND HIGH FILL, DRAWING NO. RS-503 SHALL BE USED INSTEAD OF THIS DRAWING.

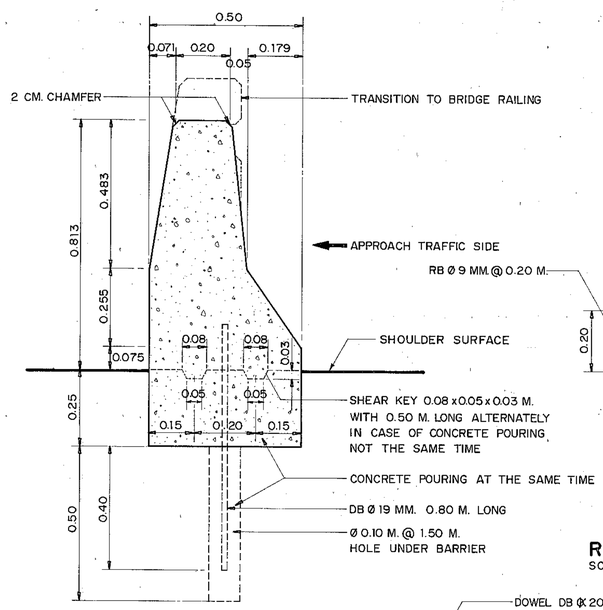


## FRONT ELEVATION OF CONCRETE BARRIER
SCALE 1 : 10

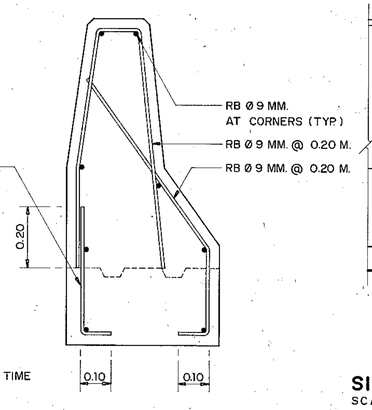


## CONCRETE BARRIER REINFORCEMENT DETAIL
SCALE 1 : 10

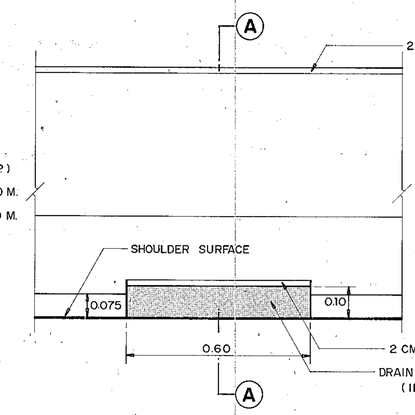


## SIDE ELEVATION OF CONCRETE BARRIER
SCALE 1 : 10

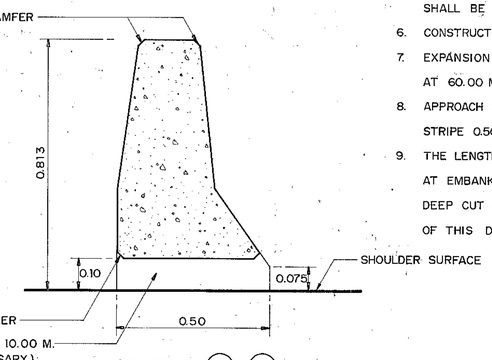


## SECTION (A)-(A)
SCALE 1 : 10

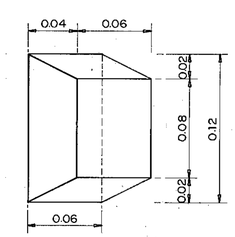


## SHEAR KEY DETAIL
SCALE 1 : 2.5

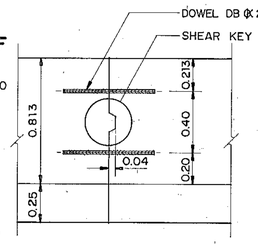


## CONSTRUCTION JOINT DETAIL
SCALE 1 : 20

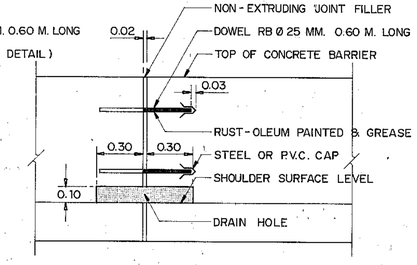


## EXPANSION JOINT DETAIL
SCALE 1 : 20

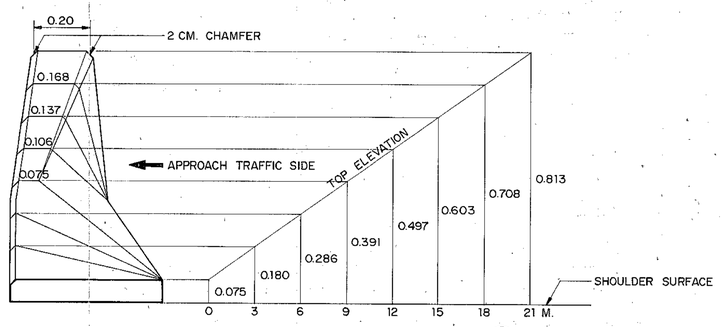


## APPROACH CONCRETE BARRIER TYPE (E)
SCALE 1 : 10

## REMARK :

THIS BARRIER IS SUITABLE ONLY IN SPECIFIC LOCATIONS AND CERTAIN CONDITIONS, IT SHOULD BE APPLIED WITH THE FIRM INFORMATIONS CONCERNED AND RECOMMENDED BY THE ENGINEER.

# KINGDOM OF THAILAND
MINISTRY OF TRANSPORT AND COMMUNICATIONS
DEPARTMENT OF HIGHWAYS

STANDARD DRAWING

CONCRETE BARRIER AT BRIDGE APPROACH

| | | |
|---|---|---|
| DESIGNED : D.O.H. & CONSULTANTS | CHECKED : | DATE JULY 1994 |
| SUBMITTED : (DIRECTOR OF LOCATION & DESIGN DIVISION) | | SCALE AS SHOWN |
| APPROVED : (DIRECTOR GENERAL) | | DWG. NO. RS-506 |
| | | SHEET NO. 43 |

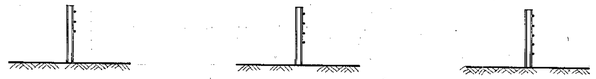

## CABLE GUARDRAIL
NOT TO SCALE

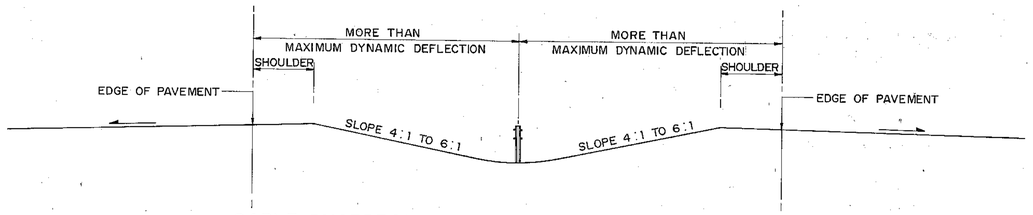


## CABLE GUARDRAIL AT MEDIAN OF DIVIDED HIGHWAYS
NOT TO SCALE

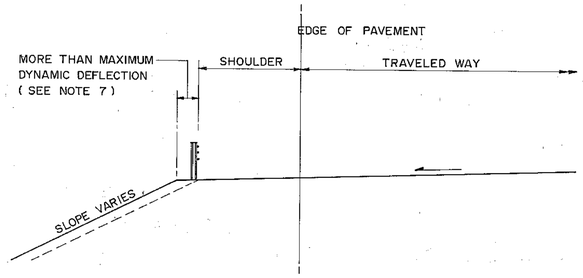


## CABLE GUARDRAIL AT OUTER SHOULDER
NOT TO SCALE

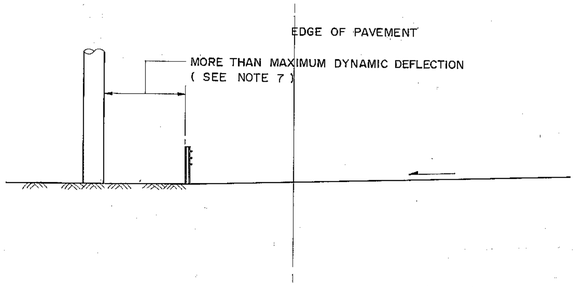


## CABLE GUARDRAIL AT RIGID OBJECTS
NOT TO SCALE

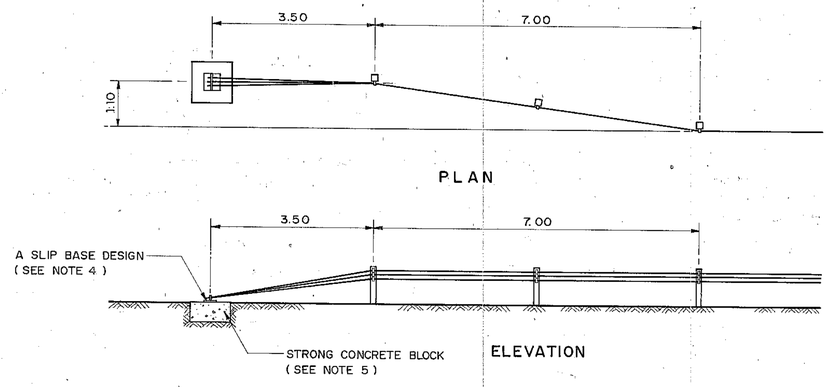


## CABLE GUARDRAIL TERMINAL
NOT TO SCALE

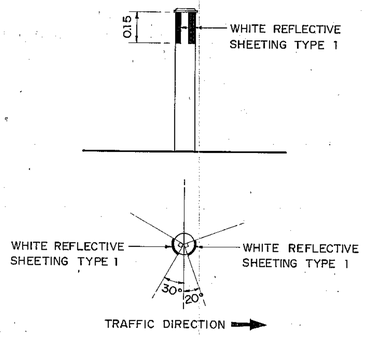


## DETAIL OF REFLECTIVE SHEETING ATTACHMENT
NOT TO SCALE

## WARRANTING FEATURES FOR CABLE GUARDRAIL INSTALLATION :

1. CABLE GUARDRAIL SHALL BE INSTALLED AT LOCATION FOR VISIBILITY PURPOSE.
2. CABLE GUARDRAIL SHALL BE USED ONLY IF ADEQUATE DEFLECTION DISTANCE EXISTS.
3. NOT RECOMMENDED FOR USE IN URBAN AREAS.
4. NOT RECOMMENDED FOR USE IN MEDIANS NARROWER THAN 8.00 METERS, NOR IN MEDIANS WHICH CONTAIN RIGID OBJECTS.
5. CABLE GUARDRAIL SYSTEMS AT MEDIANS ARE RECOMMENDED FOR USE ON IRREGULAR TERRAIN, AND ON WIDER MEDIANS WHERE THE NEED IS ONLY TO PREVENT POTENTIALLY CATASTROPHIC CROSS MEDIAN ACCIDENTS.
6. NOT RECOMMENDED FOR USE IN AREAS WHERE IT IS LIKELY TO BE HIT FREQUENTLY BECAUSE CABLE GUARDRAIL SYSTEMS REQUIRE MORE MAINTENANCE PER HIT THAN ANY OF THE SYSTEM.
7. NOT RECOMMENDED FOR HIGH FILL OVER 7.00 M.

## NOTES :

1. THE SYSTEM OF CABLE GUARDRAIL CONSISTS OF 18 MM. (MINIMUM) DIAMETER STEEL CABLES SPACED 7.5 CM. TO 10 CM. APART AND MOUNTED ON WEAK POSTS. THE TOP CABLE HEIGHT RANGES FROM 67.5 CM. TO 75 CM. CABLE GUARDRAIL HAVE BEEN SUCCESSFULLY CRASH - TESTED ( SEE REMARK 1 ) OR OTHER CRITERIA OF ACCEPTED INSTITUTE.
2. IMPACT PERFORMANCE : THIS SYSTEM WILL GENERALLY REDIRECT VEHICLES IN THE 1,800 - 4,500 lb. RANGE, THE MAXIMUM DYNAMIC DEFLECTION OBSERVED DURING THE STANDARD STRENGTH TESTING IS 11.5 FEET ( 3.50 METERS ).
3. THE CABLE GUARDRAIL IS FLARED BACKWARD AT FULL HEIGTH TO AN END POST OFFSET 1.10 METER FROM THE TANGENT LINE. FROM THE END POST, ALL CABLE STRANDS ARE THEN TURNED DOWN AND ANCHORED TO A CONCRETE BLOCK IN THE GROUND.
4. THE CABLE SYSTEM IS PLACED ON SUPPOSEDLY " WEAK" POSTS, THE END POST IS FURTHER WEAKENED BY USED OF A SLIP BASE.
5. A CRASHWORTHY END TERMINAL IS CRITICAL IN EACH OF THE CABLE SYSTEMS, BOTH TO PROVIDE ADEQUATE ANCHORAGE TO DEVELOP FULL TENSILE STRENGTH IN THE CABLE AND TO MINIMIZE VEHICLE DECELERATIONS FOR IMPACTS ON EITHER END OF AN INSTALLATION.
6. CABLE GUARDRAIL WHEN USED IN A MEDIAN, ONE (OR TWO) OF THE CABLES SHALL BE INSTALLED ON THE OPPOSITE SIDE OF EACH POST FROM THE OTHERS.
7. THE DISTANCE SHALL NOT BE LESS THAN THE DYNAMIC DEFLECTION OF THE BARRIER FOR IMPACT BY A FULL - SIZE AUTOMOBILE AT IMPACT CONDITIONS OF APPROXIMATELY 25° AND 60 MPH. (96 KPH.). SOME REDUCTION IN DEFLECTION DISTANCE MAY BE JUSTIFIED IF THE OPERATING SPEED IS LESS THAN 60 MPH. (96 KPH.).
8. ALL STEEL SHALL BE GALVANIZED. ZINC COATING SHALL NOT BE LESS THAN 550 GRAMS PER SQUARE METER.
9. REFLECTIVE SHEETING SHALL CONFORM TO TIS. 606 TYPE 1. ( ESEFFICIENT OF RETRO - REFLECTION LEVEL 1 )
10. SPACING OF POSTS SHALL BE REDUCED WITH DECREASING RADIUS OF CURVES AS RECOMMENDED BY THE MANUFACTURER OR PROPORTION ACCORDING TO DWG. NO. RS - 301.
11. SPACING OF POSTS SHALL BE REDUCED WITH INCREASING HEIGHT OF FILL IN PROPORTION ACCORDING TO DWG. NO. RS - 301.
12. PAYMENT OF CABLE GUARDRAIL SHALL BE MEASURED BY METER INCLUDING END TERMINAL.

## REMARK 1 : CRASH TEST CRITERIA

STANDARD CRASH TESTS ARE PRESENTED IN NATIONAL COOPERATIVE HIGHWAY RESEARCH PROGRAM (NCHRP) PEPORT NO. 230 "RECOMMENDED PROCEDURES FOR THE SAFETY PERFORMANCE EVALUATION OF HIGHWAY APPURTENANCES" THIS REPORT CURRENTLY RECOMMENDS TWO TESTS ON STANDARD SECTIONS OF LONGITUDINAL BARRIERS, ONE WITH AN 1,800 lb ( 816 KG. ) VEHICLE IMPACTING AT 60 MPH. ( 96 KPH. ) AND 15° TO EVALUATE OCCUPANT RISK, AND ONE WITH A 4,500 lb. ( 2,041 KG. ) VEHICLE IMPACTING AT 60 MPH. (96 KPH.) AND 25° TO EVALUATE THE STRUCTURAL INTEGRITY OF THE CABLES.

## REMARK 2 :

THIS BARRIER IS SUITABLE ONLY IN SPECIFIC LOCATIONS AND CERTAIN CONDITIONS, IT SHOULD BE APPLIED WITH THE FIRM INFORMATIONS CONCERNED AND RECOMMENDED BY THE ENGINEER.

# KINGDOM OF THAILAND
MINISTRY OF TRANSPORT AND COMMUNICATIONS
DEPARTMENT OF HIGHWAYS

STANDARD DRAWING

IMPLEMENT OF CABLE GUARDRAIL

| | | |
|---|---|---|
| DESIGNED : D.O.H. & CONSULTANTS | CHECKED : | DATE JULY 1994 |
| SUBMITTED : (DIRECTOR OF LOCATION & DESIGN DIVISION) | | SCALE NONE |
| APPROVED : (DIRECTOR GENERAL) | | DWG. NO. RS-507 |
| | | SHEET NO. 44 |

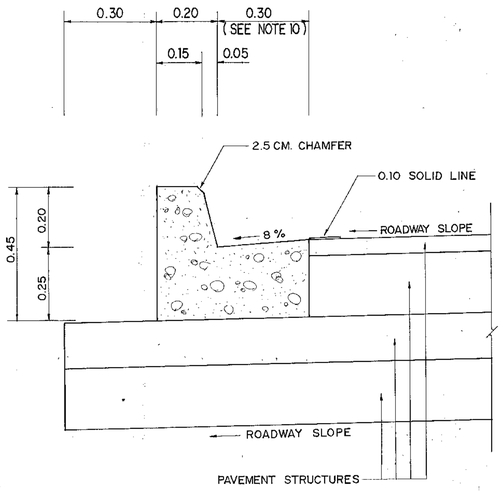


**BARRIER CURB AND GUTTER**
SCALE 1 : 10

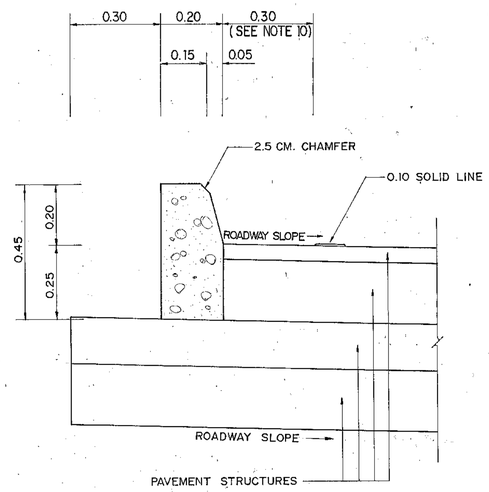


**BARRIER CURB**
SCALE 1 : 10

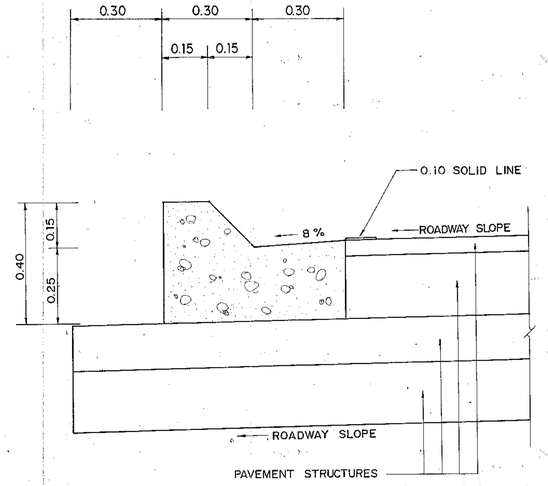


**MOUNTABLE CURB AND GUTTER**
SCALE 1 : 10

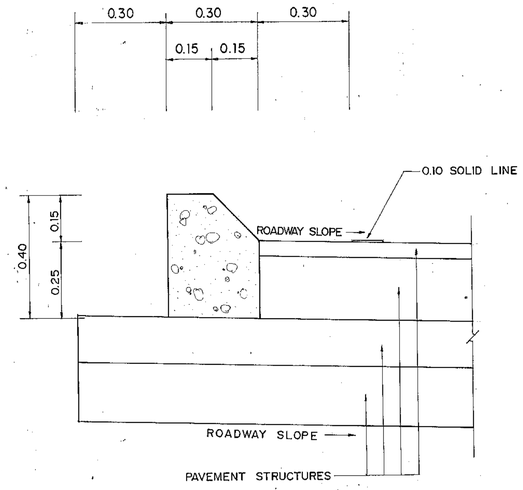


**MOUNTABLE CURB**
SCALE 1 : 10

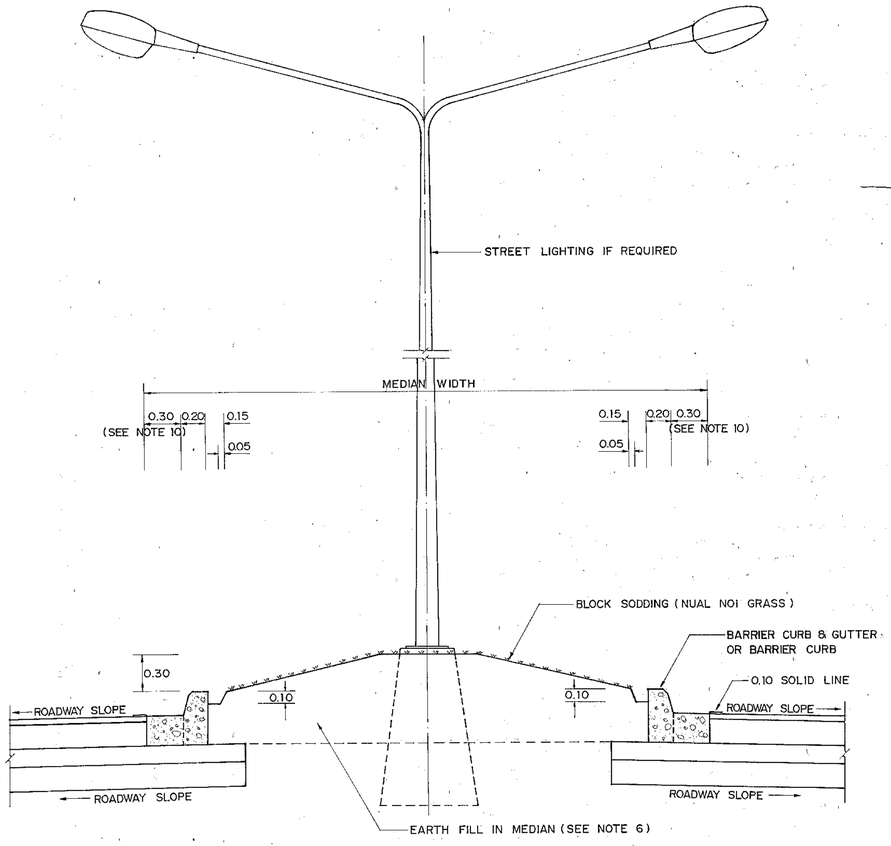


**DETAIL OF CURB AND GUTTER OR CURB AT RAISED MEDIAN**
SCALE 1 : 25

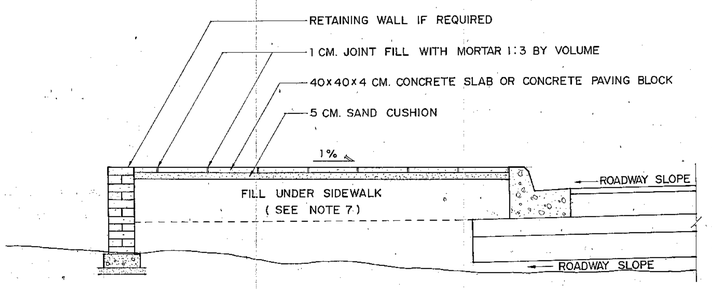


**SIDEWALK SLAB**
NOT TO SCALE

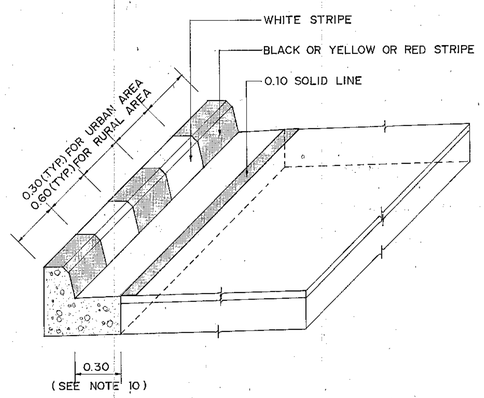


**CURB MARKING DETAIL**
NOT TO SCALE

## NOTES :

1. ALL DIMENSIONS ARE IN METERS UNLESS OTHERWISE INDICATED.
2. CONCRETE SHALL HAVE A MINIMUM ULTIMATE COMPRESSIVE STRENGTH OF 210 KSC. FOR 15x15x15 CM. CUBE AT 28 DAYS. AN APPROXIMATE MIX DESIGN PER CUBIC METER IS SUGGESTED AS FOLLOW :

| | | |
|---|---|---|
| PORTLAND CEMENT TYPE 1 | 350 | KG.(MIN.) |
| SAND | 0.43 | $M^3$ |
| CRUSHED ROCK OR GRAVEL | 0.86 | $M^3$ |
| CONCRETE SLUMP | 10 | CM.(MAX.) |

3. REINFORCING STEEL SHALL CONFORM TO TIS. 20 GRADE SR 24
4. 40x40x4 CM. CONCRETE SLAB SHALL CONFORM TO TIS. 378
5. WHITE, BLACK, YELLOW AND RED PAINTS SHALL BE GLOSS ENAMEL PAINT AND CONFORM TO TIS. 327
6. EARTH FILL IN MEDIAN SHALL BE TOP SOIL.
7. FILL UNDER SIDEWALK SHALL BE THE SAME MATERIAL AS EMBANKMENT AND COMPACTED TO 90 %(MIN.) STANDARD PROCTOR (DOH. - T107).
8. LOCATION FOR CURB MARKING SHALL BE AS SHOWN ON PLAN OR DIRECTED BY THE ENGINEER.
9. JOINT IN CONCRETE CURB & CURB AND GUTTER SHALL BE SPACED AT 10.00 M. INTERVAL, THE WIDTH OF THE JOINT IS 1 CM. AND FILLED WITH MORTAR 1 : 3 (PORTLAND CEMENT : SAND) BY VOLUME.
10. THE WIDTH MAY BE 0.50 M.

# KINGDOM OF THAILAND
## MINISTRY OF TRANSPORT AND COMMUNICATIONS
## DEPARTMENT OF HIGHWAYS

STANDARD DRAWING

CONCRETE CURB & CURB AND GUTTER DETAILS

| | | |
|---|---|---|
| DESIGNED : D.O.H. & CONSULTANTS | CHECKED : | DATE JULY 1994 |
| SUBMITTED : (DIRECTOR OF LOCATION & DESIGN DIVISION) | | SCALE AS SHOWN |
| | | DWG. NO. RS-508 |
| APPROVED : (DIRECTOR GENERAL) | | SHEET NO. 45 |

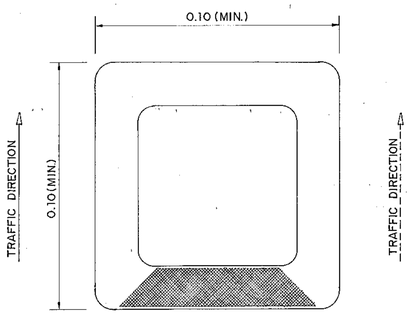


**PLAN OF UNI-DIRECTIONAL TYPE ROAD STUD**
NOT TO SCALE

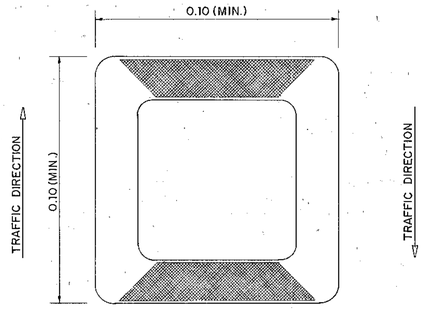


**PLAN OF BI-DIRECTIONAL TYPE ROAD STUD**
NOT TO SCALE

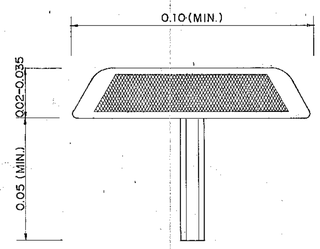


**SIDE ELEVATION OF ROAD STUD**
NOT TO SCALE

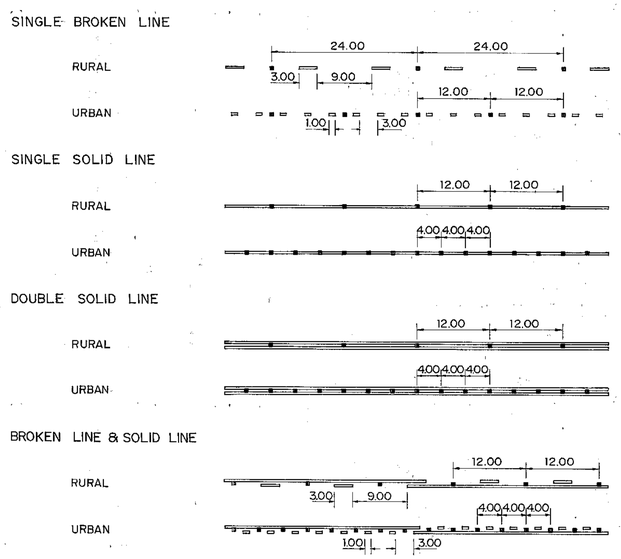


**ROAD STUD AT CENTER LINE OF ROADWAY**
NOT TO SCALE

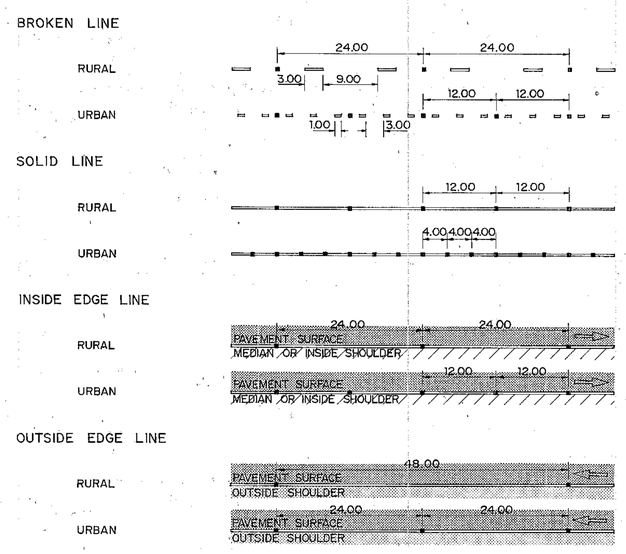


**ROAD STUD AT LANE LINE & EDGE LINE**
NOT TO SCALE

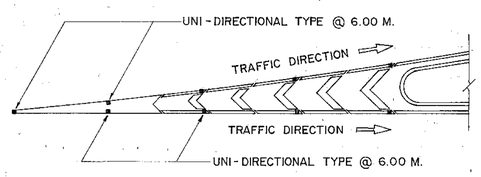


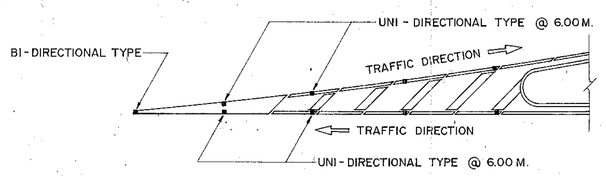


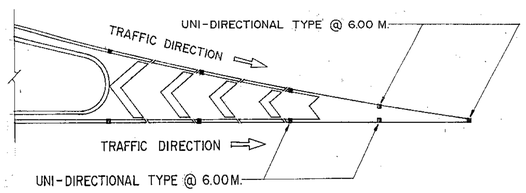


**ROAD STUD AT CHEVRON HATCHING**
NOT TO SCALE

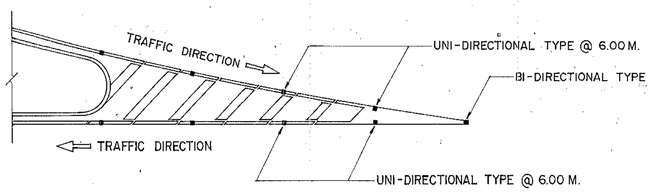


**ROAD STUD AT CROSS HATCHING**
NOT TO SCALE

## NOTES :

1. ALL DIMENSIONS ARE IN METERS UNLESS OTHERWISE INDICATED.
2. ROAD STUD SHALL BE MADE OF ALLUMINIUM OR ALLUMINIUM ALLOY. SIZE OF THE BASE SHALL BE NOT LESS THAN 100x100 MM. WITH 20-35 MM. HIGH. LENGTH OF THE SHANK SHALL BE NOT LESS THAN 50 MM. ROAD STUD SHALL WITHSTAND TO IMPACT LOAD WITHOUT DISTORTION OR CRACK.
3. REFLECTOR SHALL BE YELLOW OR WHITE REFLECTIVE BEADS WHICH MANUFACTURING EXCLUSIVELY FOR REFLECTOR. AMOUNT OF BEADS SHALL BE NOT LESS THAN 40 PER SIDE, EMBEDED TO THE ROAD STUD.
4. THE PROCEDURES OF INSTALLATION
   - 4.1 THE HOLE SHALL BE DRILLED WIDER THAN DIAMETER OF THE SHANK ABOUT 3 MM.
   - 4.2 MATERIALS IN THE HOLE SHALL BE REMOVED.
   - 4.3 EPOXY ADHESIVE SHALL BE APPLIED FULLY INTO THE HOLE.
   - 4.4 THE SHANK SHALL BE EMBEDED INTO THE HOLE. THE ROAD STUD SHALL BE PRESSED UNTIL EPOXY ADHESIVE SHALL BE BLEEDED TO ADHERE BETWEEN PAVEMENT SURFACE AND ROAD STUD.
5. ROAD STUDS AT CENTER LINE OF ROADWAY SHALL BE BI-DIRECTIONAL TYPE OTHERS SHALL BE UNI-DIRECTIONAL TYPE.
6. ROAD STUDS SHALL BE INSTALLED BEFORE P.C. STATION OF CURVE AND AFTER P.T. STATION OF CURVE ABOUT 65 METERS.
7. INSTALLATION OF ROAD STUDS IN CURVE WITH RADIUS MORE THAN 320 METERS SHALL BE INSTALLED AS TANGENT INSTALLATION.

## TABLE 1 INSTALLATION OF ROAD STUD ON TANGENT

| TYPE OF LINE | COLOUR OF REFLECTOR | SPACING OF ROAD STUD (M.) | | LOCATION |
|---|---|---|---|---|
| | | RURAL | URBAN | |
| CENTER LINE | | | | |
| SINGLE BROKEN LINE | YELLOW | 24.00 | 12.00 | BETWEEN BROKEN LINE |
| SINGLE SOLID LINE | YELLOW | 12.00 | 4.00 | ON SOLID LINE |
| DOUBLE SOLID LINE | YELLOW | 12.00 | 4.00 | BETWEEN DOUBLE SOLID |
| FOR MULTI - LANE | | | | LINES |
| LANE LINE | | | | |
| BROKEN LINE | WHITE | 24.00 | 12.00 | BETWEEN BROKEN LINE |
| SOLID LINE | WHITE | 12.00 | 6.00 | ON SOLID LINE |
| EDGE LINE | | | | |
| INSIDE EDGE LINE | YELLOW | 24.00 | 12.00 | ON EDGE LINE |
| OUTSIDE EDGE LINE | WHITE | 48.00 | 24.00 | ON EDGE LINE |

## TABLE 2 INSTALLATION OF ROAD STUD IN CURVE

| TYPE OF LINE | COLOUR OF REFLECTOR | SPACING OF ROAD STUD (M.) | | LOCATION |
|---|---|---|---|---|
| | | RADIUS OF CURVE BETWEEN 100-300M. | RADIUS OF CURVE LESS THAN 100M. | |
| BROKEN LINE | THE SAME COLOUR AS THE LINE | 12.00 | - | BETWEEN BROKEN LINE |
| SINGLE SOLID LINE | | 12.00 | 4.00 | ON SOLID LINE |
| DOUBLE SOLID LINE | | 12.00 | 4.00 | BETWEEN DOUBLE SOLID LINES |
| BROKEN LINE & SOLID LINE | | 12.00 | 4.00 | BETWEEN THE LINES |

**KINGDOM OF THAILAND**
**MINISTRY OF TRANSPORT AND COMMUNICATIONS**
**DEPARTMENT OF HIGHWAYS**

STANDARD DRAWING

ROAD STUD

| | | |
|---|---|---|
| DESIGNED : D.O.H. & CONSULTANTS | CHECKED : | DATE JULY 1994 |
| SUBMITTED : (DIRECTOR OF LOCATION & DESIGN DIVISION) | | SCALE NONE |
| APPROVED : (DIRECTOR GENERAL) | | DWG. NO. RS-601 |
| | | SHEET NO. 46 |

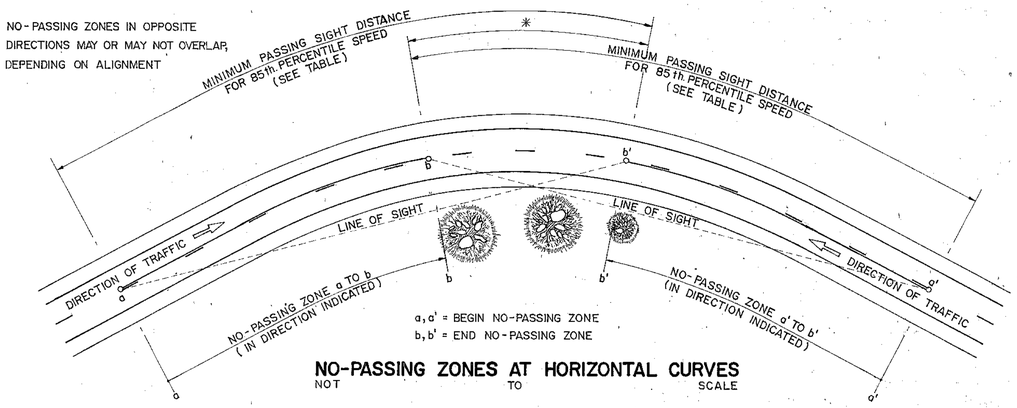


## NO-PASSING ZONES AT HORIZONTAL CURVES
NOT TO SCALE

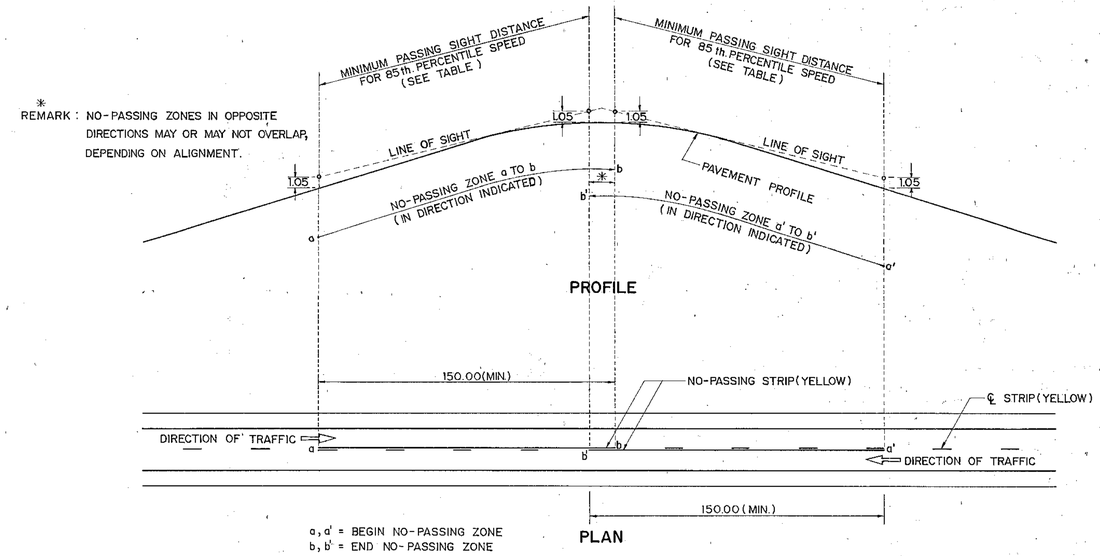


## NO-PASSING ZONES AT VERTICAL CURVES
NOT TO SCALE

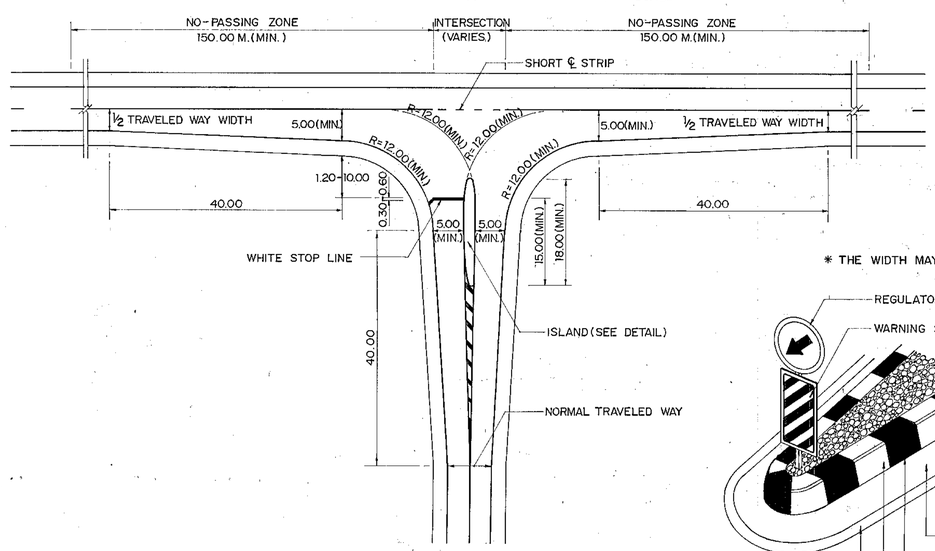


## TYPICAL MARKING AT JUNCTION WITH DIVISIONAL ISLAND
NOT TO SCALE

* THE WIDTH MAY BE 0.50 M.

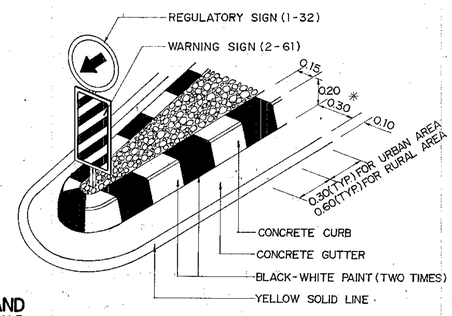


## PAINTING AT CONCRETE CURB
NOT TO SCALE

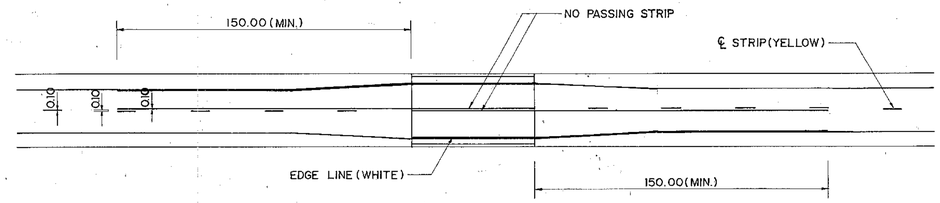


## BRIDGE APPROACH
NOT TO SCALE

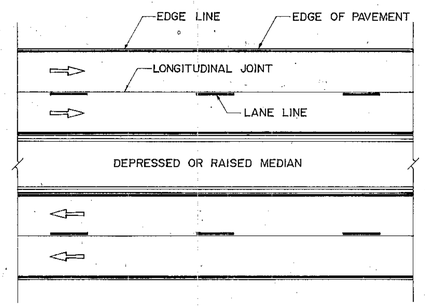


## MARKING AT CONCRETE PAVEMENT
NOT TO SCALE

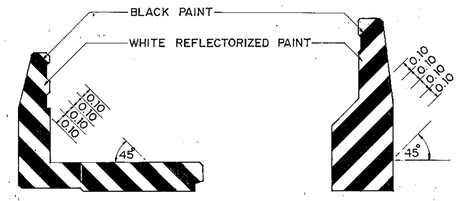


## PAINTING AT BRIDGE ENDS
NOT TO SCALE

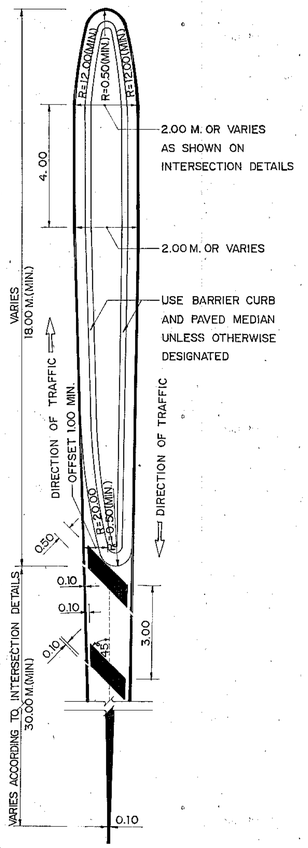


## ISLAND DETAILS
NOT TO SCALE

## TABLE MINIMUM PASSING SIGHT DISTANCE

| 85 PERCENTILE SPEED (KPH.) | MINIMUM PASSING SIGHT DISTANCE (M.) |
|---|---|
| 50 | 150 |
| 60 | 180 |
| 70 | 210 |
| 80 | 240 |
| 90 | 275 |
| 100 | 315 |
| 110 | 345 |
| 120 | 380 |

## NOTES :

1. ALL DIMENSIONS ARE IN METERS UNLESS OTHERWISE INDICATED.
2. ALL MARKINGS SHALL BE IN ACCORDANCE WITH THE DEPARTMENT OF HIGHWAYS' TRAFFIC CONTROL DEVICE MANUAL, PART 2 ISSUED BE 2533.
3. PAVEMENT MARKING FOR THE ASPHALTIC CONCRETE AND THE REINFORCED CONCRETE PAVEMENTS SHALL BE REFLECTORIZED THERMOPLASTIC PAINT, CONFORMING TO TIS.542. PAVEMENT MARKINGS FOR THE SURFACE TREATMENT PAVEMENT SHALL BE REFLECTORIZED PAINT, CONFORMING TO TIS.415 AND TIS.543.
4. THIS DRAWING SHALL BE REFERENCED TO DWG. NO. RS-603.

# KINGDOM OF THAILAND
MINISTRY OF TRANSPORT AND COMMUNICATIONS
DEPARTMENT OF HIGHWAYS

STANDARD DRAWING

MARKING DETAILS-I

| | | |
|---|---|---|
| DESIGNED: D.O.H. & CONSULTANTS | CHECKED: | DATE JULY 1994 |
| SUBMITTED: (DIRECTOR OF LOCATION & DESIGN DIVISION) | | SCALE NONE |
| APPROVED: (DIRECTOR GENERAL) | | DWG. NO. RS-602 |
| | | SHEET NO. 47 |

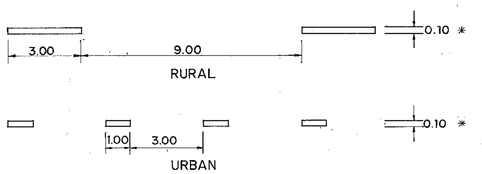


SINGLE BROKEN LINE

SINGLE SOLID LINE

DOUBLE SOLID LINE

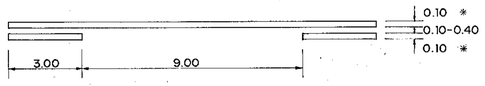


BROKEN LINE & SOLID LINE

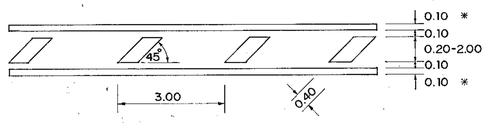


DOUBLE LINE WITH CROSS HATCHING

* STANDARD WIDTH IS 10CM., THE ADJUSTED WIDTH SHALL CONFORM TO THE TABLE.

## CENTER LINE MARKINGS
NOT TO SCALE

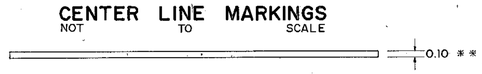


* * STANDARD WIDTH IS 10CM., FOR UNINTERRUPTED-FLOW HIGHWAY WITH ADT. IS MORE THAN 32,000 VEHICLE/DAY, THE WIDTH SHALL BE 15 CM.

## EDGE LINE MARKING
NOT TO SCALE

BROKEN LINE

WIDE BROKEN LINE

SHORT BROKEN LINE

SOLID LINE

* * * FOR UNINTERRUPTED-FLOW HIGHWAY WITH ADT. IS MORE THAN 32,000 VEHICLE/DAY, THE WIDTH SHALL BE 15 CM.

## LANE LINE MARKINGS
NOT TO SCALE

## STOP LINE MARKING
NOT TO SCALE

## GIVEWAY LINE MARKING
NOT TO SCALE

## TABLE : WIDTH OF CENTER LINE MARKING

### A. TWO-LANE HIGHWAY

(NUMBERS ARE IN CENTIMETERS)

| ADT. (VEHICLE / DAY) | WIDTH OF TRAVELED WAY (METERS) | | | | | |
|---|---|---|---|---|---|---|
| | 5.00 | 5.50 | 6.00 | 6.50 | 7.00 | MORE THAN 7.00 |
| LESS THAN 500 | 7 | 7 | 10 | 10 | 10 | 10 |
| MORE THAN 500 | 10 | 10 | 10 | 10 | 10 | 10 |
| MORE THAN 4000 | 10 | 10 | 15 | 15 | 15 | 15 |
| MORE THAN 8000 | 10 | 10 | 15 | 15 | 15 | 20 |

### B. MULTILANE UNDIVIDED HIGHWAY (DOUBLE SOLID LINE)

(NUMBERS ARE IN CENTIMETERS)

| ADT. (VEHICLE / DAY) | WIDTH OF TRAVELED WAY (METERS) | | |
|---|---|---|---|
| | LESS THAN 14.00(1) | 14.00 | MORE THAN 14.00 |
| MORE THAN 8000 | WIDTH 10<br>GAP 10 | WIDTH 10<br>GAP 10 | WIDTH 10<br>GAP 10 |
| MORE THAN 16000 | WIDTH 10<br>GAP 10 | WIDTH 15<br>GAP 15 | WIDTH 15<br>GAP 15-60(2) |
| MORE THAN 32000 | WIDTH 15<br>GAP 15 | WIDTH 20<br>GAP 20 | WIDTH 20<br>GAP 20-80(2) |

REMARKS: (1) FOR ULTIMATE STAGE WHICH THE TRAVELED WAY WIDTH IS LESS THAN 13.00 METERS, THE CENTER LINE MARKINGS SHALL BE TWO-LANE HIGHWAY FORMAT.
(2) IF WIDTH OF GAP IS MORE THAN 40 CM., THE CENTER LINE MARKING SHALL BE DOUBLE LINE WITH CROSS HATCHING FORMAT.

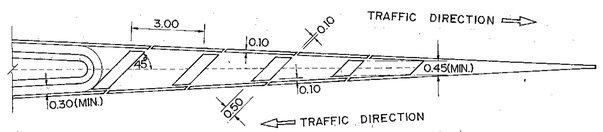


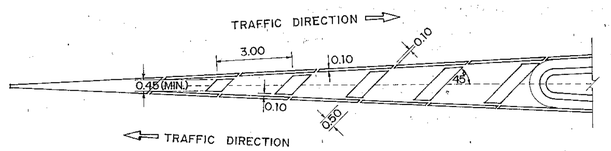


## CROSS HATCHING MARKING
NOT TO SCALE

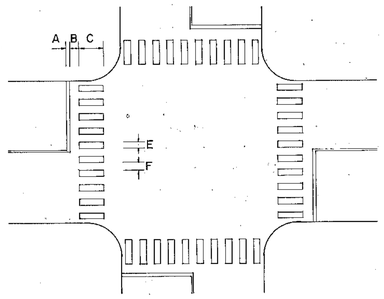


CROSSWALK MARKING WITH LONGITUDINAL LINES FOR ADDED VISIBILITY

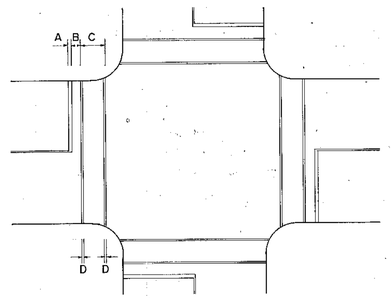


STANDARD CROSSWALK MARKING

## CROSSWALK MARKINGS
NOT TO SCALE

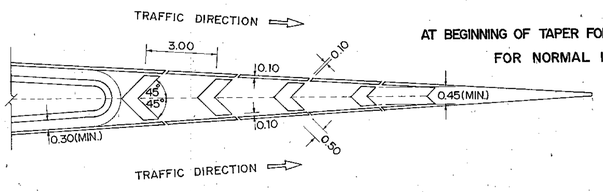


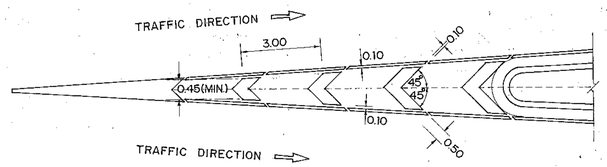


## CHEVRON HATCHING MARKING
NOT SCALE

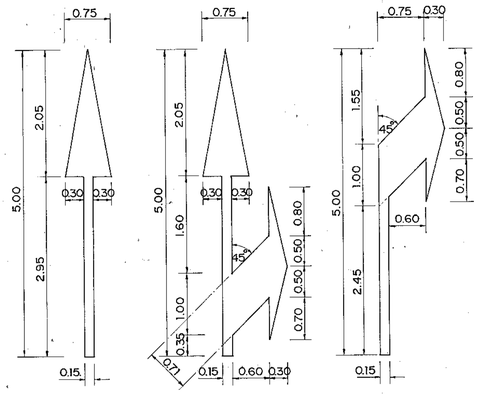


## DIRECTIONAL ARROWS
SCALE 1 : 50

A = 0.30 - 0.60 M.
B = 1.00 M.
C = 2.00 - 4.00 M.
D = 0.5 A
E = 0.60 M.
F = 0.80 M.

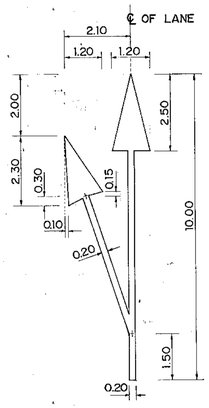


AT BEGINNING OF TAPER FOR DECELERATION LANE, FOR NORMAL INSTALLATION

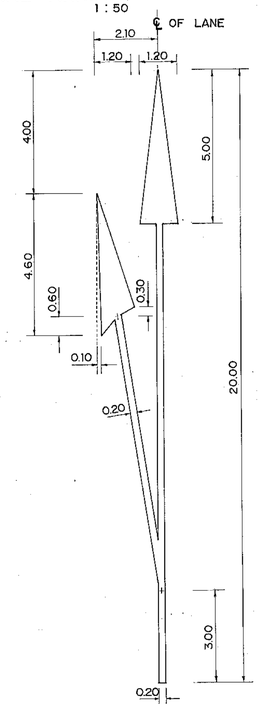


AT BEGINNING OF TAPER FOR DECELERATION LANE, FOR DIVIDED HIGHWAY

## LONG DIRECTIONAL ARROWS
SCALE 1 : 100

## NOTES :

1. ALL DIMENSIONS ARE IN METERS UNLESS OTHERWISE INDICATED.
2. THIS DRAWING SHALL BE REFERENCED TO DWG. NO. RS-602

**KINGDOM OF THAILAND**
MINISTRY OF TRANSPORT AND COMMUNICATIONS
DEPARTMENT OF HIGHWAYS

STANDARD DRAWING

MARKING DETAILS-II

| | | |
|---|---|---|
| DESIGNED: D.O.H. & CONSULTANTS | CHECKED: | DATE JULY 1994 |
| SUBMITTED: (DIRECTOR OF LOCATION & DESIGN DIVISION) | | SCALE AS SHOWN |
| APPROVED: (DIRECTOR GENERAL) | | DWG. NO. RS-603 |
| | | SHEET NO. 48 |

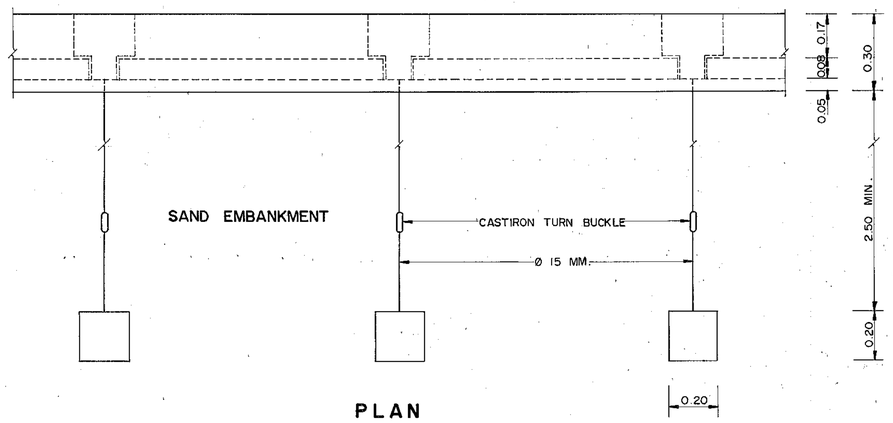


PLAN

RETAINING WALL TYPE III

SCALE 1 : 12.5

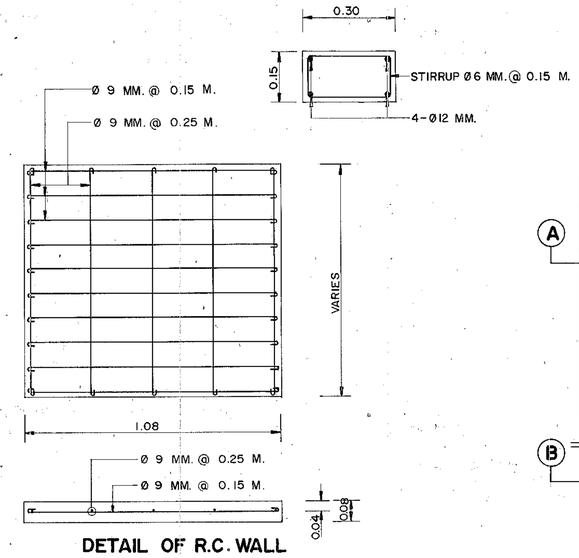


DETAIL OF R.C. WALL

SCALE 1 : 12.5

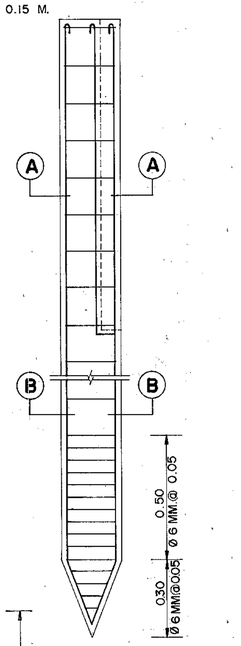


DETAIL OF PILE

SCALE 1 : 12.5

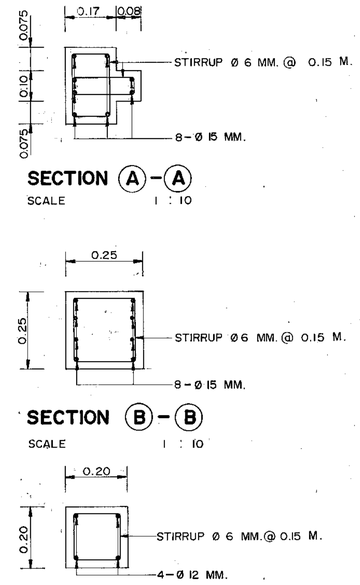


SECTION (A)-(A)

SCALE 1 : 10

SECTION (B)-(B)

SCALE 1 : 10

SECTION (C)-(C)

SCALE 1 : 10

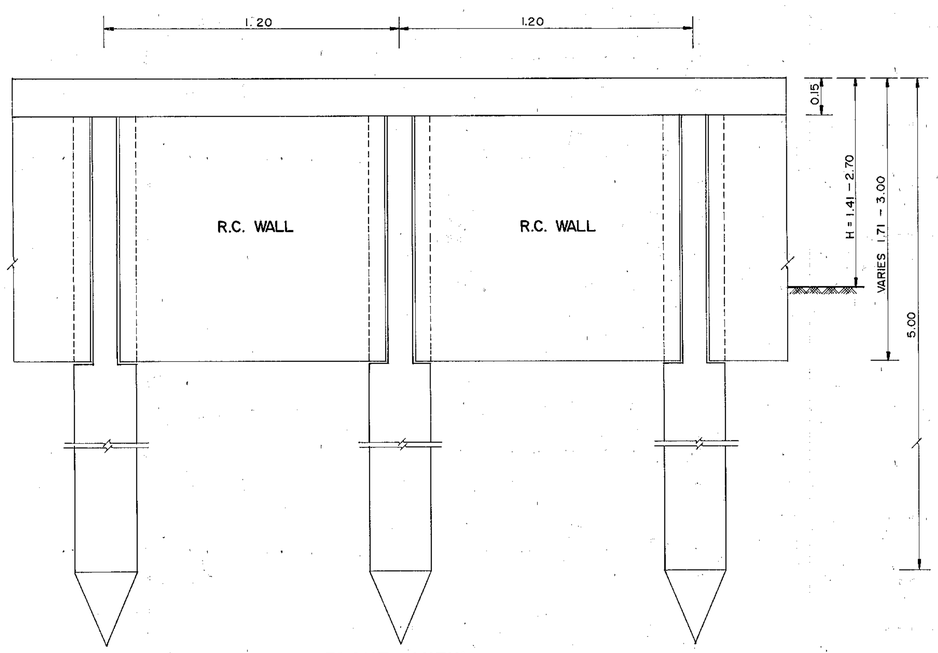


FRONT VIEW

RETAINING WALL TYPE III

SCALE 1 : 12.5

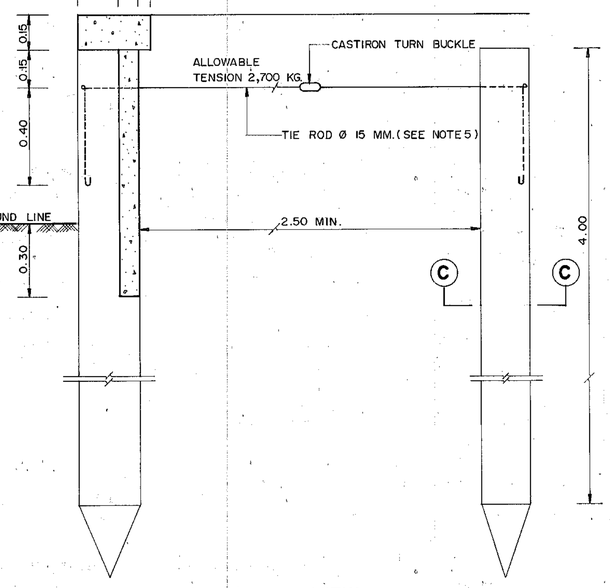


SIDE VIEW

RETAINING WALL TYPE III

SCALE 1 : 12.5

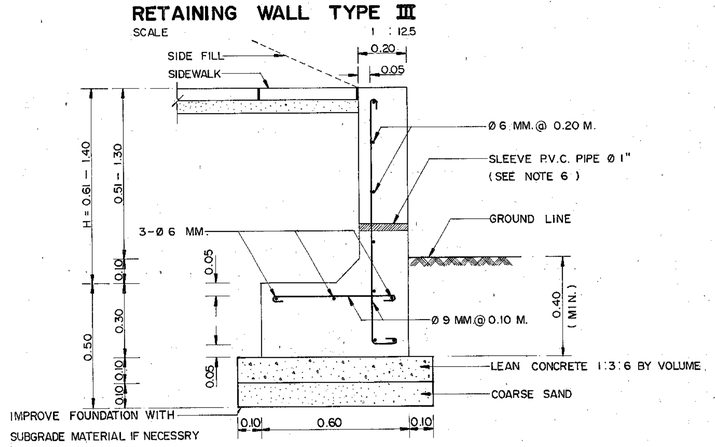


RETAINING WALL TYPE II ( RETAINING R.C. WALL )

SCALE 1 : 12.5

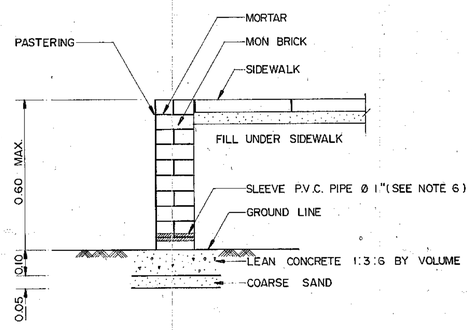


RETAINING WALL TYPE I ( MASONRY BRICK WALL )

SCALE 1 : 12.5

## NOTES :

1. ALL DIMENSION ARE IN METERS UNLESS OTHERWISE INDICATED.
2. CONCRETE SHALL HAVE A MINIMUM ULTIMATE COMPRESSIVE STRENGTH OF 210 KSC. FOR 15 x 15 x 15 CM. CUBE. AT 28 DAY. AN APPROXIMATE MIX DESIGN PER CUBIC METER IS SUGGESTED AS FOLLOWS :

| | | |
|---|---|---|
| PORTLAND CEMENT TYPE 1 | 350 | KG. ( MIN. ) |
| SAND | 0.43 | $M^3$ |
| CRUSHED ROCK OR GRAVEL | 0.86 | $M^3$ |
| CONCRETE SLUMP | 10 | CM. (MAX.) |

3. CLEAR CONCRETE COVER SHALL BE 2.5 CM. ( MIN. ).
4. REINFORCING STEEL SHALL CONFORM TO TIS. 20 GRADE SR 24.
5. TIE ROD SHALL BE COATED TWICE ASPHALTIC MATERIAL AND WOUND WITH SACK.
6. THE P.V.C. PIPE FOR THE SLEEVE SHALL CONFORM TO TIS. 17 CLASS 13.5 THE SLEEVE SHALL BE MADE AT THE CONNECTION POINT OF THE WATER SUPPLY DISTRIBUTION PIPE TO THE ROADSIDE BUILDING IN CASE OF NO DISTRIBUTION PIPE OR NO ROADSIDE BUILDINGS, THE SLEEVE SHALL ALSO BE MADE BUT AT THE POINTS EXPECTING FOR FUTURE WATER SUPPLY AS DIRECTED BY THE ENGINEER AND THE ENDS OF THE SLEEVE SHALL BE PLUGGED. WITH P.V.C. PLUG WHEN NOT IN USE.

# KINGDOM OF THAILAND
## MINISTRY OF TRANSPORT AND COMMUNICATIONS
## DEPARTMENT OF HIGHWAYS

STANDARD DRAWING

RETAINING WALL-I

| | | |
|---|---|---|
| DESIGNED : D.O.H. & CONSULTANTS | CHECKED : | DATE JULY 1994 |
| SUBMITTED : (DIRECTOR OF LOCATION & DESIGN DIVISION) | | SCALE AS SHOWN |
| | | DWG. NO. RS-701 |
| APPROVED : (DIRECTOR GENERAL) | | SHEET NO. 49 |

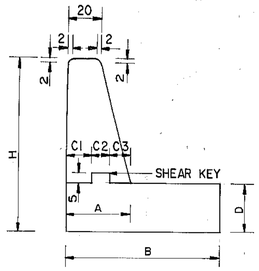


## SIDE VIEW OF RETAINING WALL SHOWING POSITION AND DISTANCES OF SHEAR KEY

NOT TO SCALE

| H | B | D | A | C1 | C2 | C3 |
|---|---|---|---|---|---|---|
| 100 | 100 | 25 | 25 | 10 | 7.5 | 7.5 |
| 200 | 175 | 30 | 30 | 10 | 10 | 10 |
| 300 | 250 | 35 | 39 | 15 | 14 | 10 |

NOTE : IN CASE THE HEIGHT, H IS IN THE INTERVAL OF THE HEIGHT GIVEN IN THE TABLE THE VALUE D, A, C1, C2 AND C3 SHALL BE CALCULATED FOR THE HEIGHT, H BY LINEAR RATIO COMPARING IN THE INTERVAL OF THE HEIGHT GIVEN. THE VALUE B SHALL BE CALCULATED IN THE SAME WAY IN CASE OF RETAINING WALL USING SPREAD FOOTING. USING THE VALUE B WHICH ARE GIVEN IN THIS TABLE FOR RETAINING WALL USING PILES.

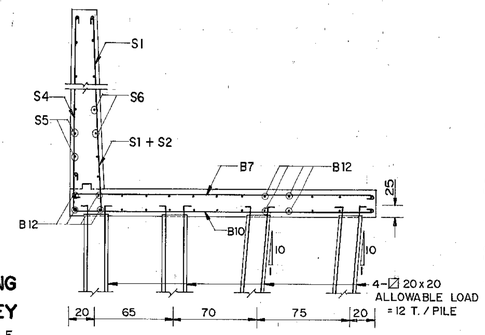


## RETAINING WALL, HEIGHT 2.01-3.00 M.

NOT TO SCALE

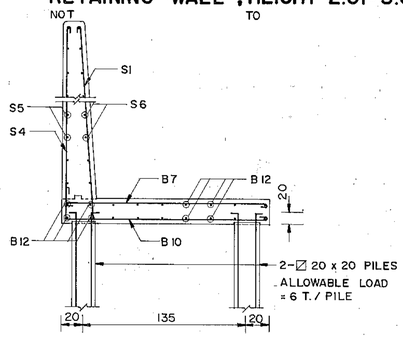


## RETAINING WALL, HEIGHT 1.01 - 2.00 M.

NOT TO SCALE

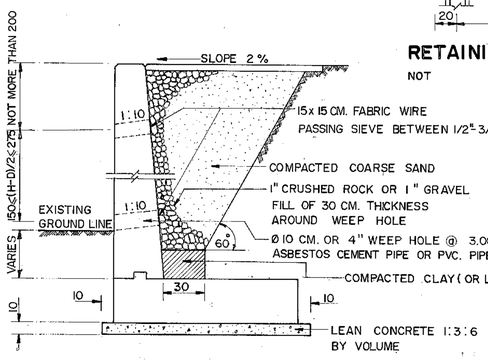


## DETAIL OF BASE OF RETAINING WALL, WEEP HOLE AND EARTH BACK FILL

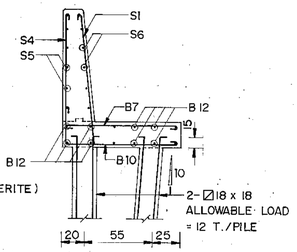


## RETAINING WALL, HEIGHT ≤ 1.00 M.

NOT TO SCALE

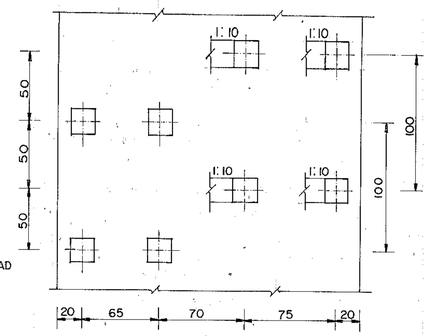


## PLAN OF PILE

NOT TO SCALE

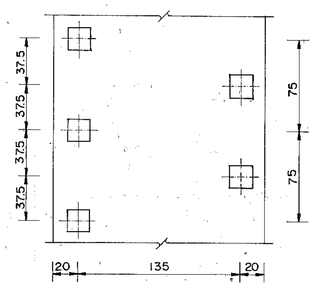


## PLAN OF PILE

NOT TO SCALE

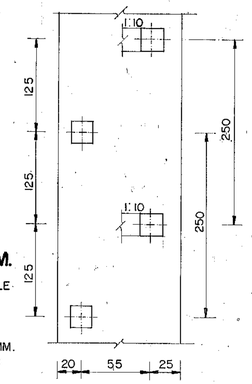


## PLAN OF PILE

NOT TO SCALE

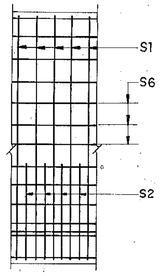


## REINFOCEMENT OF INNER WALL, HEIGHT 2.01-3.00 M.

NOT TO SCALE

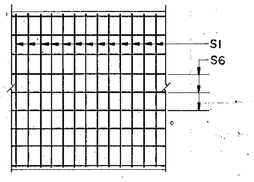


## REINFORCEMENT OF INNER WALL, HEIGHT ≤ 2.00 M.

NOT TO SCALE

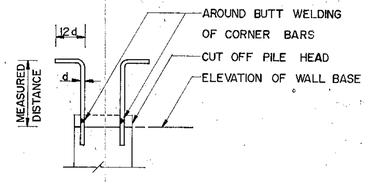


## DETAIL OF CORNER BAR AT PILE HEAD

SCALE 1 : 10

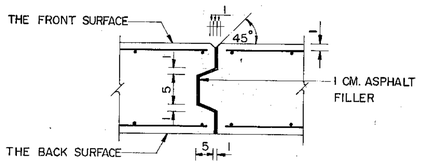


## EXPANSION JOINT DETAIL OF WALL

NOT TO SCALE

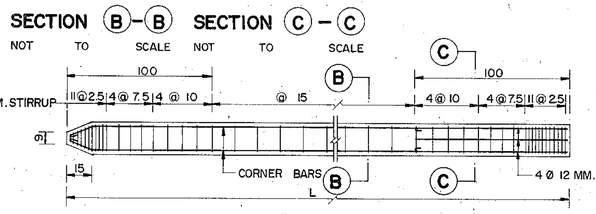


## SECTION (B)-(B) SECTION (C)-(C)

NOT TO SCALE NOT TO SCALE

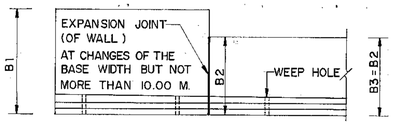


## PLAN OF BASE OF RETAINING WALL USING PILE WHEN WALL HEIGHT VARIES LINEARLY WITH LENGTH

NOT TO SCALE




## REINFORCEMENT OF 18 x 18 CM. AND 20 x 20 CM. PILES

SCALE 1 : 20

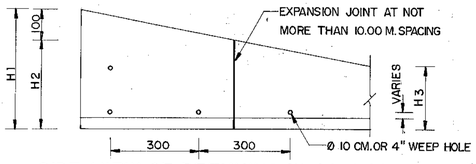


## SIDE VIEW OF RETAINING WALL USING PIPE WHEN WALL HEIGHT VARIES LINEARLY WITH LENGTH

NOT TO SCALE

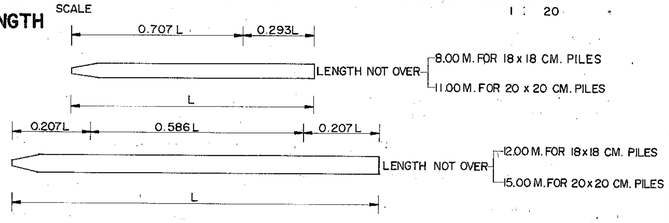


## PICK-UP DETAILS FOR PILES

NOT TO SCALE

## CONSTRUCTION SPECIFICATIONS

1. GENERAL NOTES FOR RETAINING WALL

1.1 CONCRETE SHALL HAVE A MINIMUM ULTIMATE COMPRESSIVE STRENGTH OF 210 KSC. FOR 15x15x15 CM. CUBE AT 28 DAYS. AN APPROXIMATE MIX DESIGN PER CUBIC METER IS SUGGESTED AS FOLLOWS :

| | | |
|---|---|---|
| PORTLAND CEMENT TYPE 1 | 350 | KG. ( MIN. ) |
| SAND | 0.43 | $M^3$ |
| CRUSHED ROCK OR GRAVEL | 0.86 | $M^3$ |
| CONCRETE SLUMP | 10 | CM. ( MAX. ) |
| WATER - CEMENT RATIO | 0.45-0.50 BY WEIGHT | |

1.2 AFTER THE FOUNDATION UNDERNEATH IS COMPACTED, THE LEAN CONCRETE SHALL BE PLACED FOR 10 CM. THICK AS THE BASE WITH 10 CM. AROUND WIDER THAN THE FOUNDATION THE MIX DESIGN OF THE LEAN CONCRETE IS 1:3:6 BY VOLUME.

1.3 CONCRETE COVER SHALL BE 2.5 CM. EXCEPT FOR THE FOUNDATION STRUCTURE THE CONCRETE COVER SHALL BE 5 CM. IN CASE OF THE MARINE CLAY, CONCRETE COVER FOR THE OTHER PART OF THE WALL AND THE FOUNDATION FACING THE MARINE SOIL SHALL BE ADDED 2.5 CM. FROM THE DIMENSIONS SHOWN ON THIS DRAWING.

1.4 EARTH BACKFILL SHALL BE SANDY SOIL OR GRAVEL SOIL OR ROCK OR OTHER SOIL IN THE CONSTRUCTION AREA HAVING THE SAME QUALITIES BY THE APPROVAL OF THE ENGINEER.

2. SPECIAL NOTES OF RETAINING WALL USING PILES

2.1 THE ELEVATION OF THE FOUNDATION SHALL BE AT LEAST THE SAME ELEVATION AS THE EXISTING GROUND LINE. MEASURED FROM THE SURFACE OF THE LEAN CONCRETE IN NO. 1.2

2.2 R.C. PILES USED ARE AS SHOWN IN THIS DRAWING AND SHALL MEET THE FOLLOWING REQUIREMENT

2.2.1 20 x 20 CM. PILES SHALL BE DRIVEN TO SUCH A DEPTH THAT IT CAN SUPPORT THE ALLOWABLE LOAD OF NOT LESS THAN 12 TONS AND THE LENGTH OF THE PILE UNDER THE GROUND SURFACE IS NOT LESS THAN 10.00 M. FOR RETAINING WALL WITH 2.01 - 3.00 M. IN HEIGHT.

2.2.2 20 x 20 CM. PILES SHALL BE DRIVEN TO SUCH A DEPTH THAT IT CAN SUPPORT THE ALLOWABLE LOAD OF NOT LESS THAN 6 TONS AND THE LENGTH OF THE PILE UNDER THE GROUND SURFACE IS NOT LESS THAN 10.00 M. FOR RETAINING WALL WITH 1.01 - 2.00 M. IN HEIGHT.

2.2.3 18 x 18 CM. PILES SHALL BE DRIVEN TO SUCH A DEPTH THAT IT CAN SUPPORT THE ALLOWABLE LOAD OF NOT LESS THAN 12 TONS FOR RETAINING WALL WITH NOT MORE THAN 1.00 M. IN HEIGHT

2.2.4 THE METHOD OF DETERMINING THE ALLOWABLE LOAD ( STATIC PIPE LOAD TEST ) SHALL BE CALCULATED AS FOLLOWS :

2.2.4.1 IN CASE OF A TEST PIPE SUPPORTED, THE APPLIED LOAD MUST NOT BE LESS THAN THE GIVEN ALLOWABLE LOAD FOR PILES IN NO.2.2.1, NO.2.2.2 AND NO. 2.2.3 AND IF THE AVERAGE SETTLEMENT OF A PILE (THE TOTAL SETTLEMENT OF A PILE AT THAT TIME/THE APPLIED LOAD AT THAT TIME ) DOES. NOT EXCEED 0.025 CM./PILE IN 24 HOURS, THE ALLOWABLE LOAD OF A PILE IS HALF OF THE APPLIED LOAD AT THAT TIME. (SAFETY FACTOR=2)

2.2.4.2 IF THE SETTLEMENT RATE OF A PILE EXCEEDS THE VALUE GIVEN IN NO. 2.2.4.1 OR THE APPLIED LOAD IS LOADED TO A NEAR-FAILURE CONDITION, THE APPLIED LOAD SHALL BE DIVIDED BY 2.5 TO BE THE ALLOWABLE LOAD ( SAFETY FACTOR = 2.5 ) IN CASE IF THE ABOVE METHOD CAN NOT DETERMINE THE LOAD OF A PILE, THE ALLOWABLE LOAD CAN BE CALCULATED BY USING ONE OF THESE PILE DRIVING FORMULAS SUCH AS HILEY FORMULA, JANBU FORMULA OR DANISH FORMULA AND THE SAFETY FACTOR USED FOR THE THREE FORMULAS SHALL NOT BE LESS THAN 3 TIMES OF THE CALCULATED LOAD.

2.2.5 CONCRETE FOR PILES SHALL HAVE A MINIMUM ULTIMATE COMPRESSIVE STRENGTH OF 300 KSC. FOR 15x15 x 15 CM. CUBE AT 28 DAYS. AN APPROXIMATE MIX DESIGN PER CUBIC METER IS SUGGESTED AS FOLLOWS :

| | | |
|---|---|---|
| PORTLAND CEMENT TYPE 1 | 375 | KG. ( MIN. ) |
| SAND | 0.43 | M. |
| CRUSHED ROCK OR GRAVEL | 0.86 | M. |
| CONCRETE SLUMP | 8 | CM. ( MAX. ) |
| WATER - CEMENT RATIO | 0.40 - 0.45 BY WEIGHT | |

2.2.6 PILE HEADS SHALL BE CUT OFF BEFORE THE RETAINING WALL BASE IS CONSTRUCTED AND THE CORNER BARS SHALL BE BENDED OR WELDED WITH THE SAME SIZE OF BARS AS SHON IN THIS DRAWING.

3. REINFORCING STEEL NOTES

3.1 ALL REINFORCING STEEL SHALL BE INTERMEDIATE GRADE DEFORMED BARS ( CONFORM TO TIS.24 GRADE SD 30 ) EXCEPT FOR BAR DIAMETER LESS THAN 12 MM. WHICH MAY BE OF STRUCTURAL GRADE ( CONFORM TO TIS.24 GRADE SR 24 )

3.2 IN CASE OF SPLICING OF THE REINFORCEMENT, SPLICING SHALL BE BY AROUND BUTT WELDING WHICH THE STRENGTH OF WELD JOINT IS NOT LESS THAN THE ULTIMATE TENSILE STRENGTH OR BY LAPPING BARS WITH THE LAP LENGTH NOT LESS THAN 20 TIMES THE BAR DIAMETERS FOR THE INTERMEDITE GRADE REINFORCING STEEL ( 40 TIMES THE BAR DIAMETERS FOR STRUCTURAL GRADE REINFORCING STEEL ). LOCATIONS OF THE LAPPED BARS SHALL BE SPACED APART UNDER CONSIDERATION OF THE ENGINEER.

## NOTES :

1. ALL DIMENSIONS ARE IN CENTIMETERS UNLESS OTHERWISE INDICATED.
2. ANY PROBLEMS DUE TO THE DESIGNATIONS SHALL BE CONSIDERED AND DECIDED BY THE ENGINEER.
3. RETAINING WALLS SHOWN ON THIS DRAWING SHALL BE USED FOR ROADWAY EMBANKMENT THAT IS PROPERLY DESIGNED.

## REINFORCING STEEL FOR ONE LINEAR METER OF RETAINING WALL

BAR BENDING DETAILS

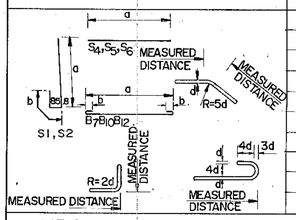


| BAR MARK | HEIGHT 3.00 M. Ø | @ | MEASURED DISTANCE a | MEASURED DISTANCE b | LENGTH | HEIGHT 2.00 M. Ø | @ | MEASURED DISTANCE a | MEASURED DISTANCE b | LENGTH | HEIGHT 1.00 M. Ø | @ | MEASURED DISTANCE a | MEASURED DISTANCE b | LENGTH |
|---|---|---|---|---|---|---|---|---|---|---|---|---|---|---|---|
| REINFORCEMENT OF WALL | | | | | | | | | | | | | | | |
| $S_1$ | 12 | 22 | 293* | 56.5 | 349.5* | 9 | 12 | 193* | 47 | 240* | 9 | 12 | 93* | 42 | 135* |
| $S_2$ | 12 | 22 | 115.5 | 56.5 | 172 | - | - | - | - | - | - | - | - | - | - |
| $S_4$ | 9 | 20 | 293* | 0 | 293* | 9 | 20 | 193* | 0 | 193* | 9 | 20 | 93* | 0 | 93* |
| $S_5$ | 9 | 20 | 100 | 0 | 100 | 9 | 20 | 100 | 0 | 100 | 9 | 20 | 100 | 0 | 100 |
| $S_6$ | 9 | 25 | 100 | 0 | 100 | 9 | 25 | 100 | 0 | 100 | 9 | 25 | 100 | 0 | 100 |
| REINFORCEMENT OF BASE | | | | | | | | | | | | | | | |
| $B_7$ | 16 | 12 | 245 | 0 | 245 | 9 | 20 | 170 | 7.5 | 185 | 9 | 20 | 95 | 7.5 | 110 |
| $B_{10}$ | 9 | 20 | 245 | 0 | 245 | 9 | 20 | 170 | 0 | 170 | 9 | 20 | 95 | 0 | 95 |
| $B_{12}$ | 9 | 12* | 100 | 0 | 100 | 9 | 20** | 100 | 0 | 100 | 9 | 20** | 100 | 0 | 100 |

NOTES : Ø BAR DIAMETER, MM.
* DECREASING THE LENGTH OF BAR IN CASE THE HEIGHT OF WALL IS LESS THAN THE VALUE GIVEN.
** OR AS SHOWN IN CROSS - SECTION

# KINGDOM OF THAILAND
## MINISTRY OF TRANSPORT AND COMMUNICATIONS
## DEPARTMENT OF HIGHWAYS

STANDARD DRAWING

RETAINING WALL - II

| | | |
|---|---|---|
| DESIGNED : D.O.H. & CONSULTANTS | CHECKED : | DATE JULY 1994 |
| SUBMITTED : (DIRECTOR OF LOCATION & DESIGN DIVISION) | | SCALE AS SHOWN |
| | | DWG. NO. RS-702 |
| APPROVED : (DIRECTOR GENERAL) | | SHEET NO. 50 |

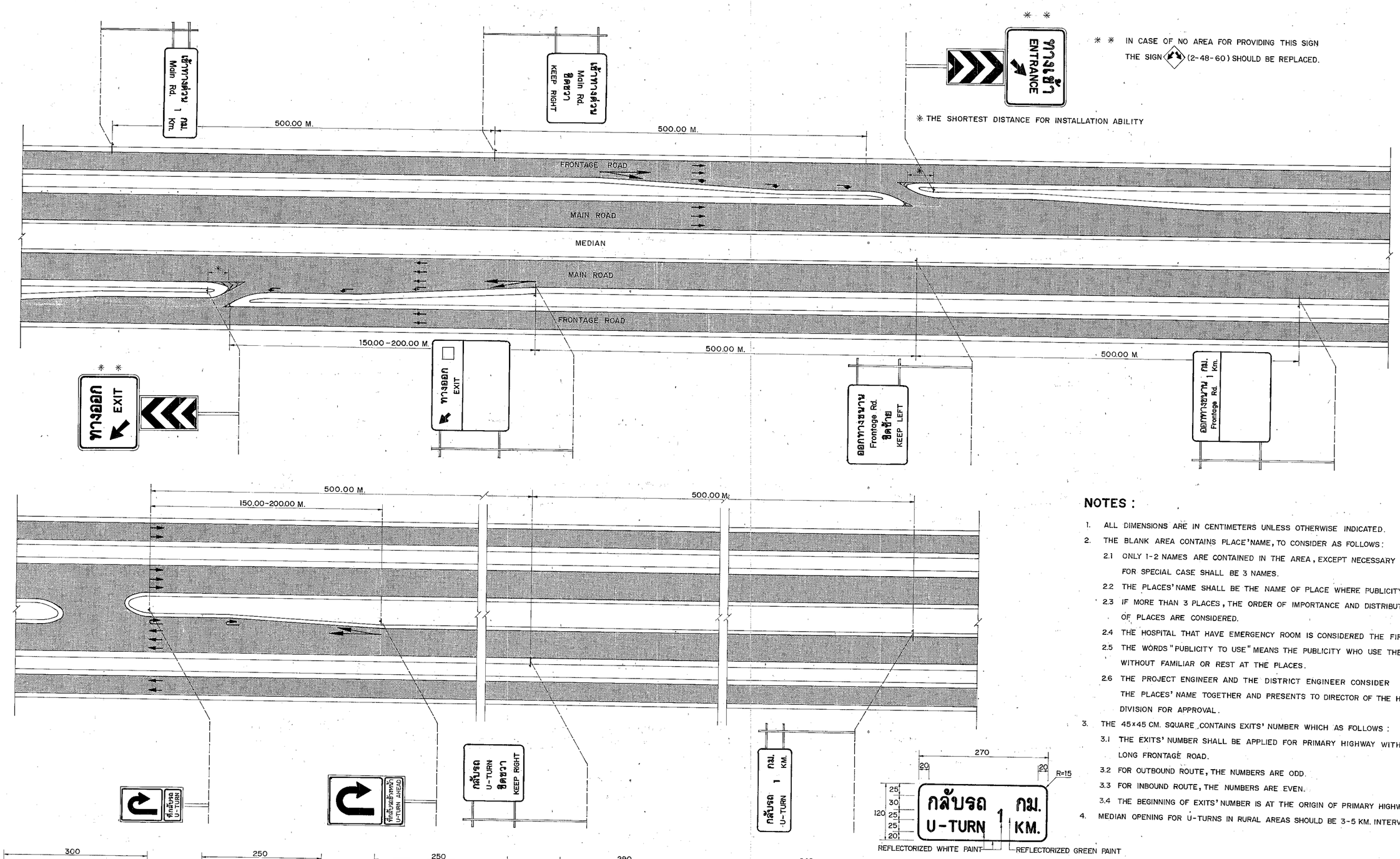


## NOTES :

1. ALL DIMENSIONS ARE IN CENTIMETERS UNLESS OTHERWISE INDICATED.
2. THE BLANK AREA CONTAINS PLACE'NAME, TO CONSIDER AS FOLLOWS :
   - 2.1 ONLY 1-2 NAMES ARE CONTAINED IN THE AREA, EXCEPT NECESSARY FOR SPECIAL CASE SHALL BE 3 NAMES.
   - 2.2 THE PLACES' NAME SHALL BE THE NAME OF PLACE WHERE PUBLICITY TO USE.
   - 2.3 IF MORE THAN 3 PLACES, THE ORDER OF IMPORTANCE AND DISTRIBUTION OF PLACES ARE CONSIDERED.
   - 2.4 THE HOSPITAL THAT HAVE EMERGENCY ROOM IS CONSIDERED THE FIRST.
   - 2.5 THE WORDS "PUBLICITY TO USE" MEANS THE PUBLICITY WHO USE THE PLACES WITHOUT FAMILIAR OR REST AT THE PLACES.
   - 2.6 THE PROJECT ENGINEER AND THE DISTRICT ENGINEER CONSIDER THE PLACES' NAME TOGETHER AND PRESENTS TO DIRECTOR OF THE HIGHWAY DIVISION FOR APPROVAL.
3. THE 45x45 CM. SQUARE CONTAINS EXITS' NUMBER WHICH AS FOLLOWS :
   - 3.1 THE EXITS' NUMBER SHALL BE APPLIED FOR PRIMARY HIGHWAY WITH LONG FRONTAGE ROAD.
   - 3.2 FOR OUTBOUND ROUTE, THE NUMBERS ARE ODD.
   - 3.3 FOR INBOUND ROUTE, THE NUMBERS ARE EVEN.
   - 3.4 THE BEGINNING OF EXITS' NUMBER IS AT THE ORIGIN OF PRIMARY HIGHWAY.
4. MEDIAN OPENING FOR U-TURNS IN RURAL AREAS SHOULD BE 3-5 KM. INTERVAL.

# KINGDOM OF THAILAND
## MINISTRY OF TRANSPORT AND COMMUNICATIONS
## DEPARTMENT OF HIGHWAYS

STANDARD DRAWING

**ROAD SIGNS AT MEDIAN OPENING & EXIT AND ENTRANCE**

| | | |
|---|---|---|
| DESIGNED : D.O.H. & CONSULTANTS | CHECKED : | DATE JULY 1994 |
| SUBMITTED : (DIRECTOR OF LOCATION & DESIGN DIVISION) | | SCALE NONE |
| APPROVED : FOR (DIRECTOR GENERAL) | | DWG. NO. RS-801 |
| | | SHEET NO. 51 |

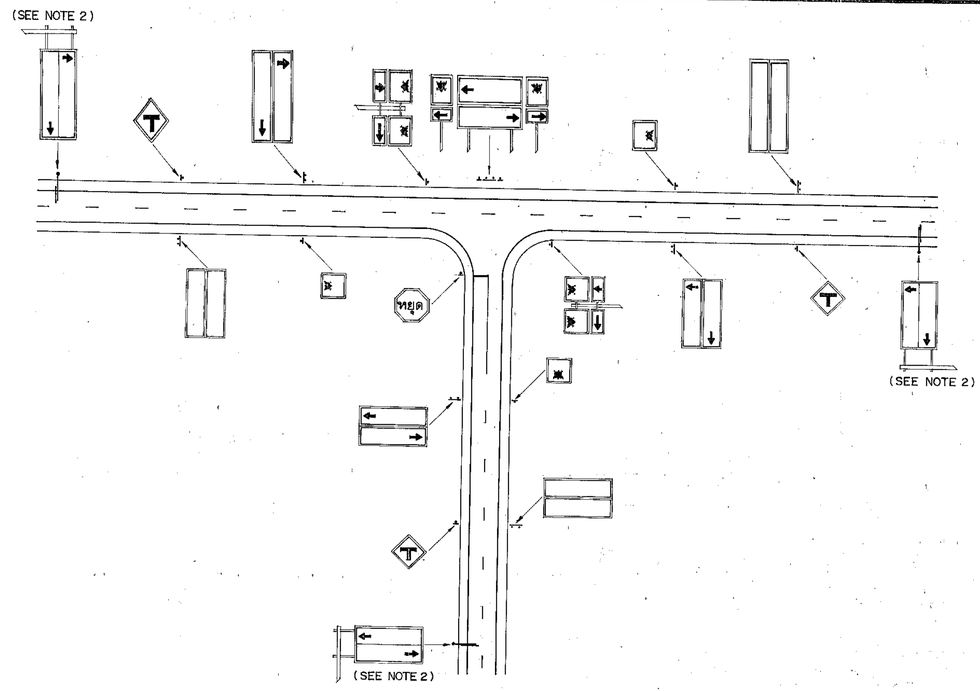


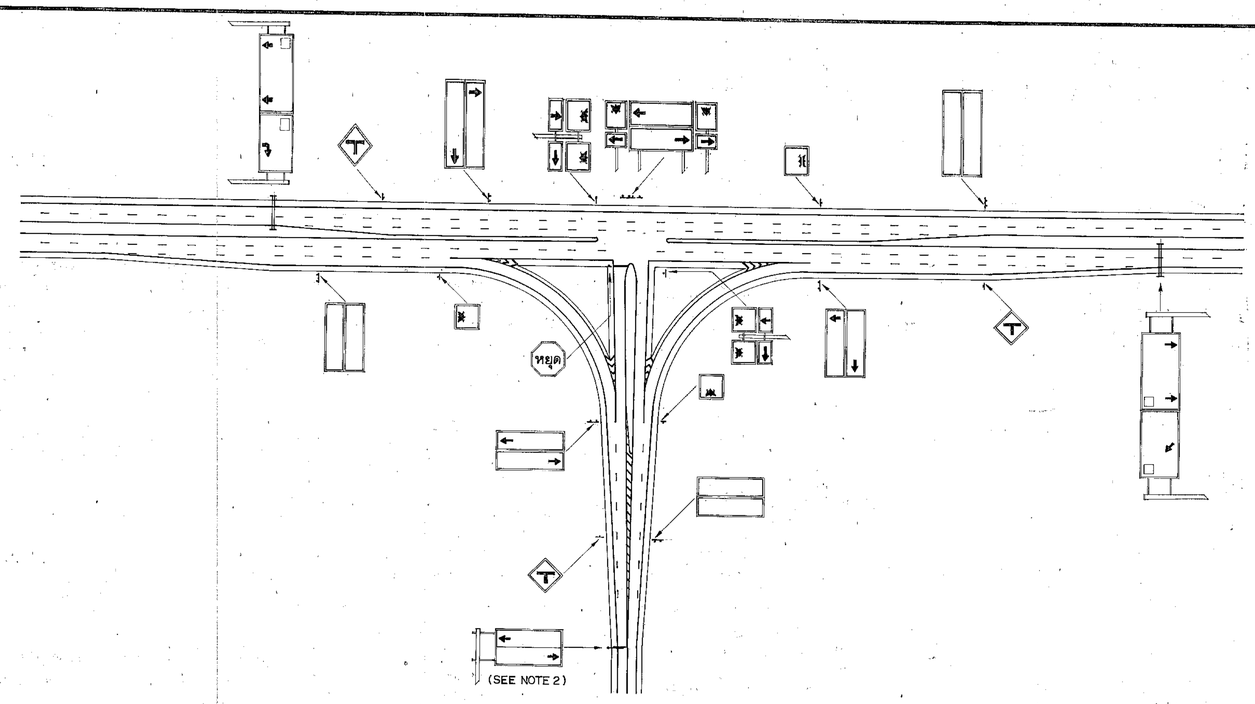


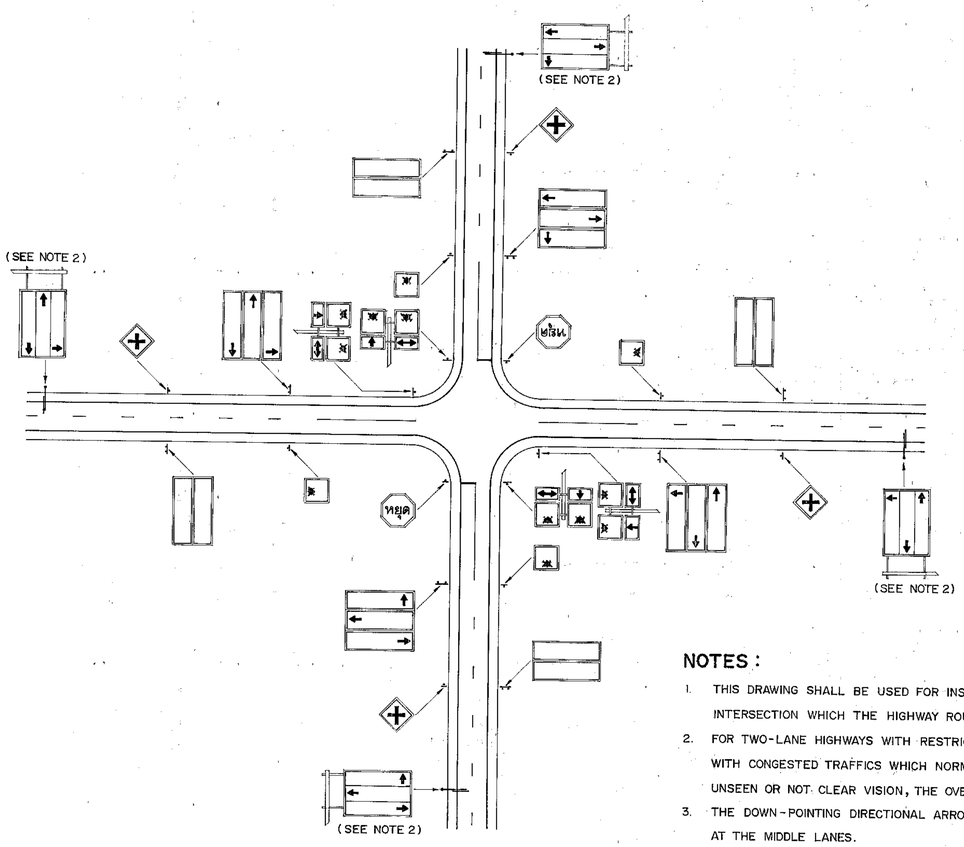


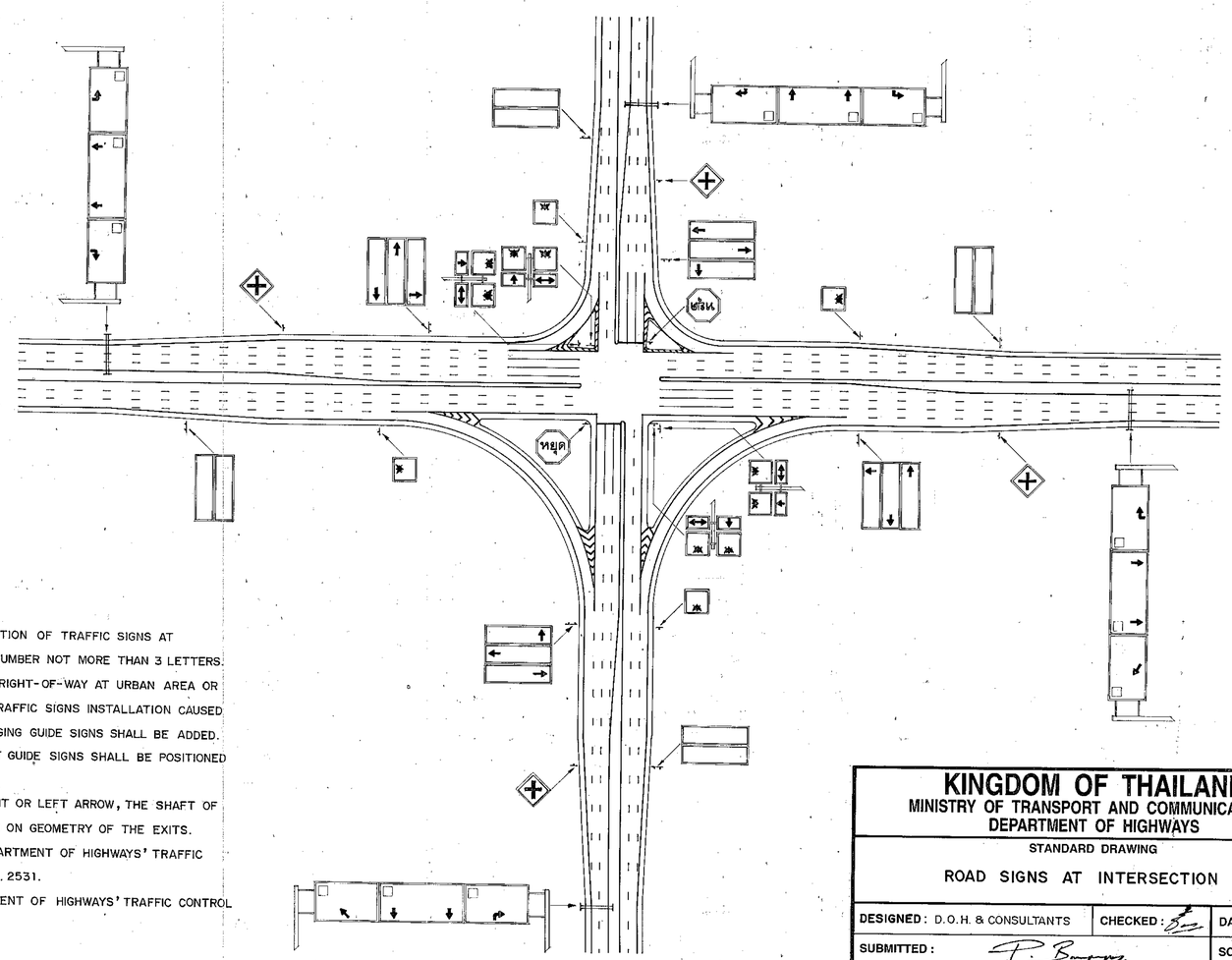

## NOTES :

1. THIS DRAWING SHALL BE USED FOR INSTALLATION OF TRAFFIC SIGNS AT INTERSECTION WHICH THE HIGHWAY ROUTE NUMBER NOT MORE THAN 3 LETTERS.
2. FOR TWO-LANE HIGHWAYS WITH RESTRICTED RIGHT-OF-WAY AT URBAN AREA OR WITH CONGESTED TRAFFICS WHICH NORMAL TRAFFIC SIGNS INSTALLATION CAUSED UNSEEN OR NOT CLEAR VISION, THE OVERHANGING GUIDE SIGNS SHALL BE ADDED.
3. THE DOWN-POINTING DIRECTIONAL ARROWS AT GUIDE SIGNS SHALL BE POSITIONED AT THE MIDDLE LANES.
4. THE ADVANCE TURN ARROWS DISPLAYS A RIGHT OR LEFT ARROW, THE SHAFT OF WHICH IS BENT OR AT A 45°ANGLE DEPENDED ON GEOMETRY OF THE EXITS.
5. TRAFFIC SIGNS SHALL CONFORM TO THE DEPARTMENT OF HIGHWAYS' TRAFFIC CONTROL DEVICE MANUAL, PART 1 ISSUED B.E. 2531.
6. MARKINGS SHALL CONFORM TO THE DEPARTMENT OF HIGHWAYS' TRAFFIC CONTROL DEVICE MANUAL, PART 2 ISSUED B.E. 2533.

# KINGDOM OF THAILAND
## MINISTRY OF TRANSPORT AND COMMUNICATIONS
## DEPARTMENT OF HIGHWAYS

STANDARD DRAWING

ROAD SIGNS AT INTERSECTION

| | | |
|---|---|---|
| DESIGNED : D.O.H. & CONSULTANTS | CHECKED : | DATE JULY 1994 |
| SUBMITTED : (DIRECTOR OF LOCATION & DESIGN DIVISION) | | SCALE NONE |
| APPROVED : For (DIRECTOR GENERAL) | | DWG. NO. RS-802 |
| | | SHEET NO. 52 |

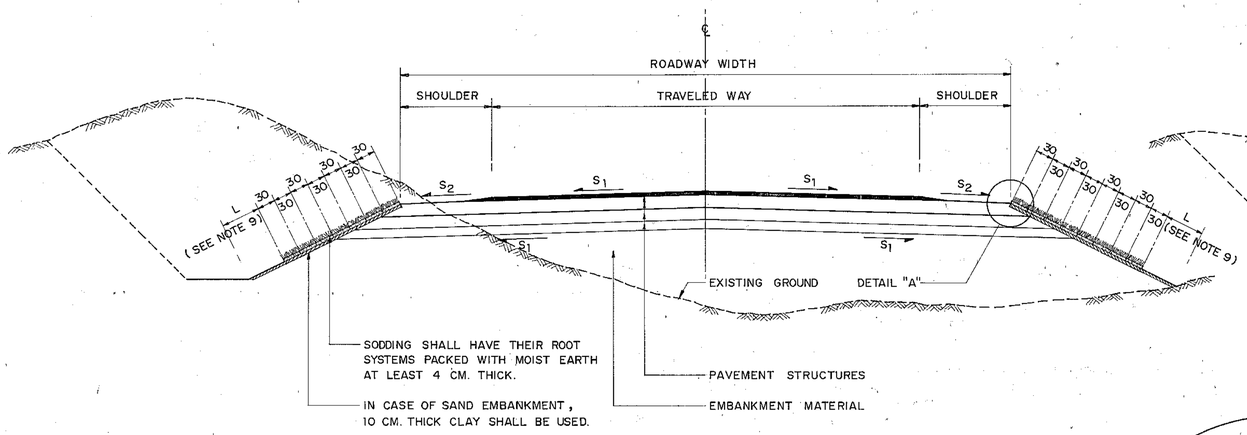


## BLOCK SODDING (TYPE I)
NOT TO SCALE

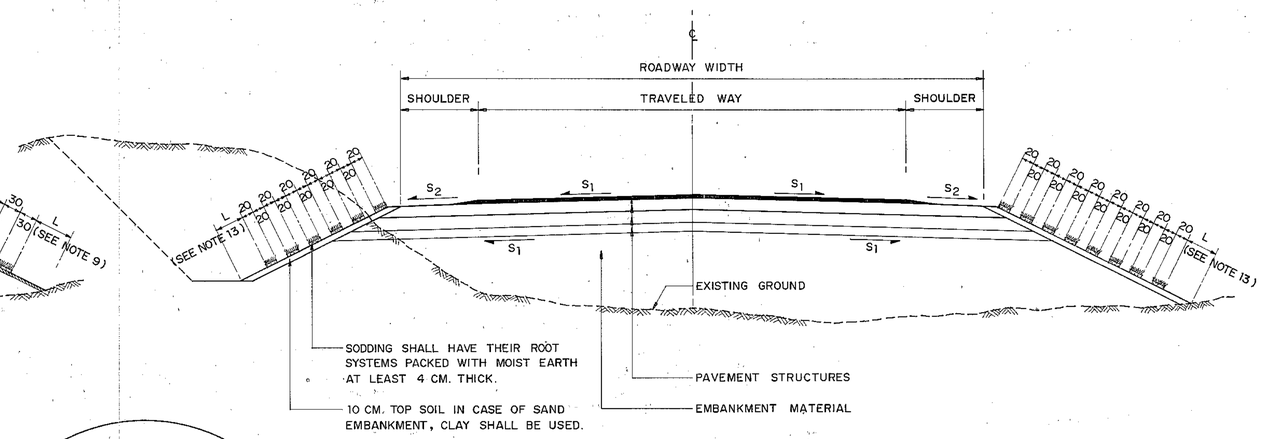


## STRIP SODDING (TYPE II)
NOT TO SCALE

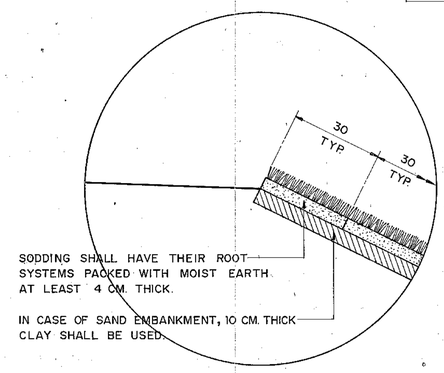


## DETAIL "A"
NOT TO SCALE

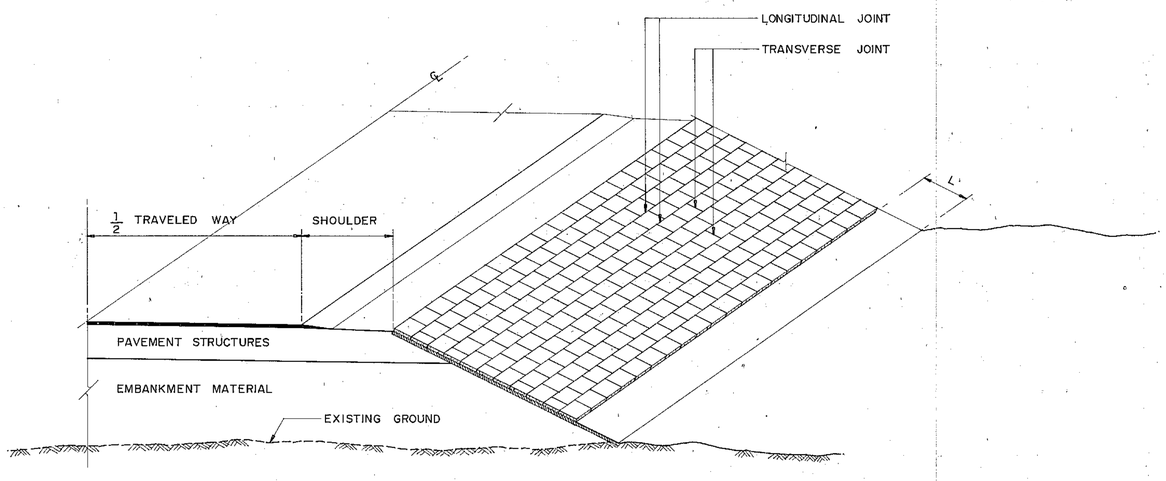


## ISOMETRIC DIAGRAM BLOCK SODDING (TYPE I)
NOT TO SCALE

## NOTES :

### GENERAL

1. ALL DIMENSIONS ARE IN CENTIMETERS UNLESS OTHERWISE INDICATED.
2. THE ENGINEER SHALL DECIDE WHETHER OR NOT TO PROVIDE SODDING FOR SLOPE PROTECTION GENERALLY EMBANKMENTS COMPOSED OF SANDY OR SILTY MATERIALS WILL REQUIRE SODDING, CUT SLOPE WILL NOT NORMALLY BE SODDED AND THEN ONLY AT THE DIRECTION OF THE ENGINEER.
3. WHERE THE SIDE SLOPE MATERIAL IS NOT SUITABLE FOR GROWING GRASS, ORGANIC TOP SOIL APPROXIMATELY 10 CM. THICK SHALL BE PLACED ON THE SIDE SLOPES AND LIGHTLY COMPACTED TO THE SATISFACTION OF THE ENGINEER, THOROUGHLY MOISTENED WITH WATER AND SODDING PLACED.
4. WHERE THE SIDE SLOPE MATERIAL IS SUITABLE FOR GRASS, THE FOLLOWING PROCEDURES SHALL APPLY AFTER THE ROADWAY FORMATION IS CONSTRUCTED TO THE ELEVATION AS SHOWN ON THE DRAWING AND THE SIDE SLOPE HAS BEEN SHAPED AS REQUIRED, THE SIDE SLOPE MATERIAL SHALL BE SCARIFIED TO A MINIMUM DEPTH OF 5 CM., THOROUGHLY MOISTENED WITH WATER AND SODDING PLACED.
5. THE TYPE OF GRASS USED SHALL BE A LOCAL SPECIES WHICH GROWS RAPIDLY THE ENGINEER SHALL DECIDE IN THE FIELD WHETHER TOP SOIL IS REQUIRED AND WHICH TYPE OF GRASS SHALL BE USED THE WORK SHALL BE COMPLETED TO THE DETAILS AS SPECIFIED ON THE DRAWING.
6. THE CONTRACTOR SHALL BE RESPONSIBLE FOR MAINTAINING THE GRASS UNTIL THE END OF THE MAINTENANCE PERIOD.

### BLOCK SODDING (TYPE I)

7. BLOCK SODDING OBTAINED FROM PLANTED GROUND FOR PLACING SHALL HAVE THEIR ROOT SYSTEM PACKED WITH MOIST EARTH AT LEAST 4 CM. THICK AND HAVE A MINIMUM SIZE OF APPROXIMATELY 30 x 30 CM. THE SODDING SHALL BE PLACED ON THE SIDE SLOPES WITHIN 48 HOURS AFTER REMOVAL FROM BORROW AREA.
8. SODDING SHALL BE LAID IN STAGGERED ROWS PARALLEL TO ROADWAY ALIGNMENT AS SHOWN ON THE DRAWING EACH BLOCK SHALL BE STAGGERED ONE HALF ITS LENGTH AND BE FIRMLY BUTTED AGAINST THE PREVIOUS BLOCK(S).
9. THE LENGTH OF "L" SHALL BE DIRECTED BY THE ENGINEER WHICH ABOVE EXISTING GROUND APPROXIMATELY 30 CM. OR NO EROSIVE POSITION.
10. PLANTED BLOCK SHALL BE PLACED AND LIGHTLY COMPACTED ON THE DESIGNATED AREAS AND THE LONGITUDINAL INTERSTICES SEALED WITH TOP SOIL. THE PLANTED SODS SHALL BE WATERED DAILY UNTIL THEY HAVE ROOTED AND HAVE ESTABLISHED THEMSELVES IN THE NEW AREAS.

### STRIP SODDING (TYPE II)

11. STRIP SODDING SHALL ALSO HAVE THEIR ROOT SYSTEMS PACKED WITH MOIST EARTH AT LEAST 4 CM. THICK AND HAVE A MINIMUM WIDTH OF 20 CM. STRIP SODDING SHALL ALSO BE PLACED WITHIN 48 HOURS AFTER REMOVAL FROM BORROW AREAS.,
12. SODDING SHALL BE PLACED IN CONTINUOUS ROW PARALLEL TO ROADWAY ALIGNMENT AS SHOWN ON THE DRAWINGS EACH ROW SHALL BE AT LEAST 20 CM. WIDE AND GAPS BETWEEN ROWS SHALL NOT EXCEED 20 CM.
13. THE LENGTH OF "L" SHALL BE DIRECTED BY THE ENGINEER WHICH ABOVE EXISTING GROUND APPROXIMATELY 30 CM. OR NO EROSIVE POSITION.
14. PLANTED STRIPS SHALL BE PLACED AND LIGHTLY COMPACTED ON THE DESIGNATED AREA AND THE TRANSVERSE INTERSTICES SEALED WITH TOP SOIL STRIP SODDING SHALL BE MAINTAINED AS DESCRIBED IN NOTE NO. 3 AND NO. 6 ABOVE.

**KINGDOM OF THAILAND**
**MINISTRY OF TRANSPORT AND COMMUNICATIONS**
**DEPARTMENT OF HIGHWAYS**

STANDARD DRAWING

SODDING DETAILS

| | | |
|---|---|---|
| DESIGNED: D.O.H & CONSULTANTS | CHECKED: | DATE JULY 1994 |
| SUBMITTED: (DIRECTOR OF LOCATION & DESIGN DIVISION) | | SCALE NONE |
| APPROVED: (DIRECTOR GENERAL) | | DWG. NO. SP-101 |
| | | SHEET NO. 53 |

## REMARK :

THIS METHOD OF SLOPE PROTECTION IS SUITABLE ONLY IS SPECIFIC LOCATIONS AND CERTAIN CONDITIONS , IT SHOULD BE APPLIED WITH THE FIRM INFORMATIONS CONCERNED AND RECOMMENDED BY THE ENGINEER.

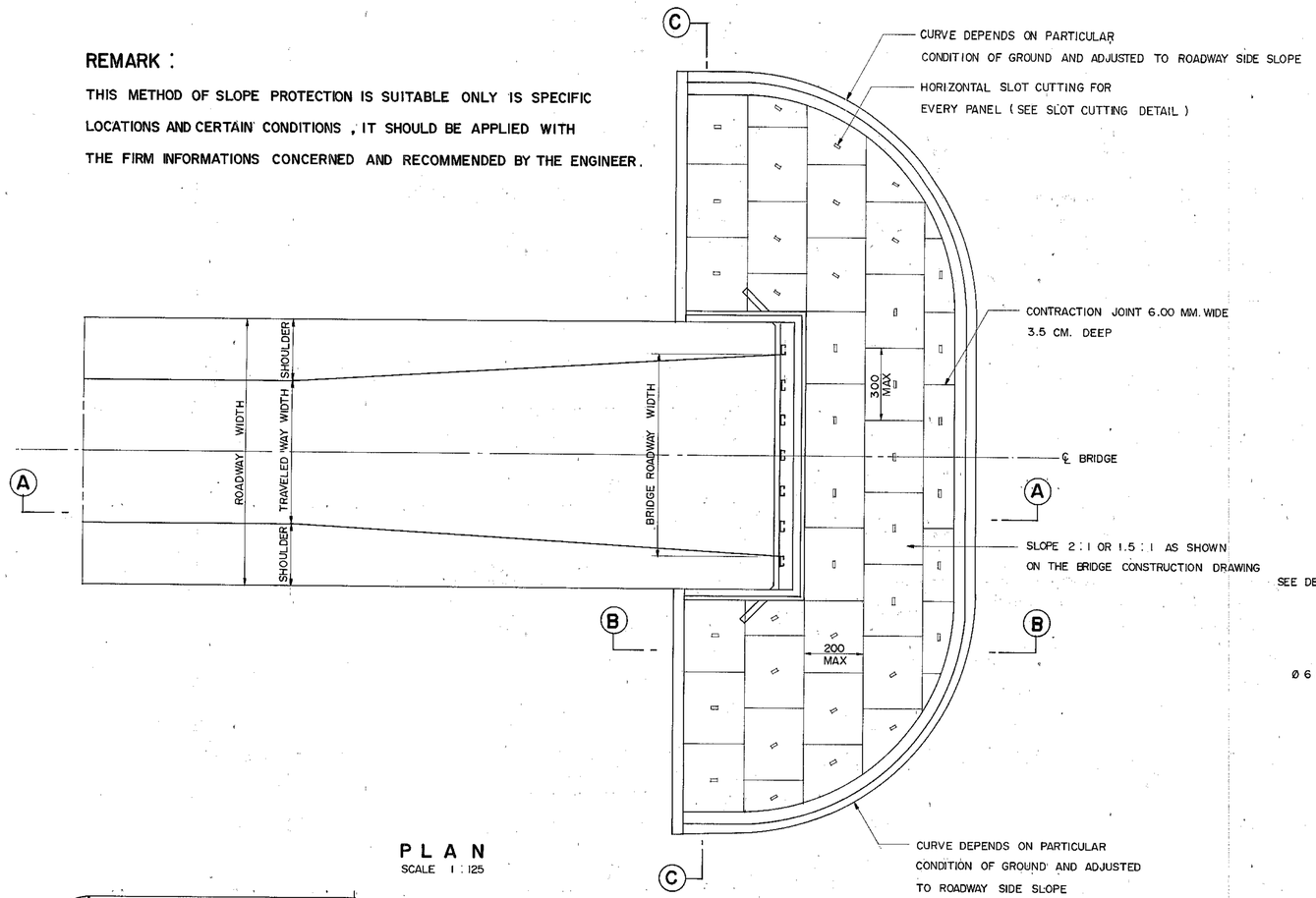


**PLAN**
SCALE 1 : 125

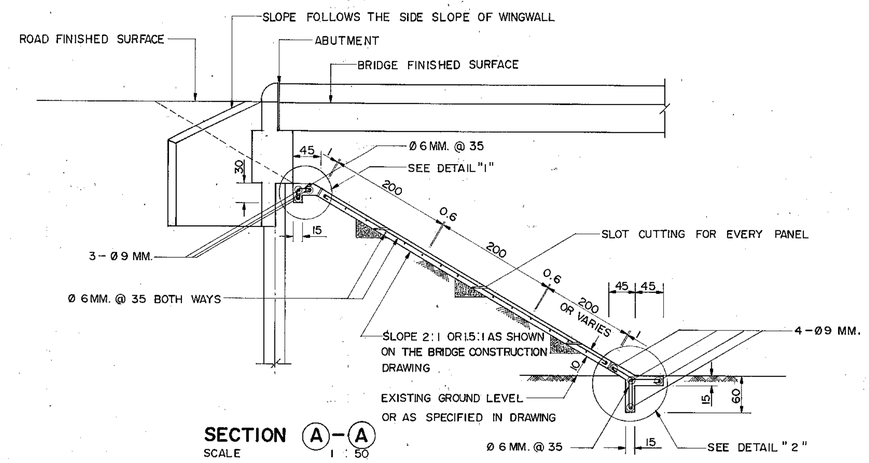


**SECTION (A) - (A)**
SCALE 1 : 50

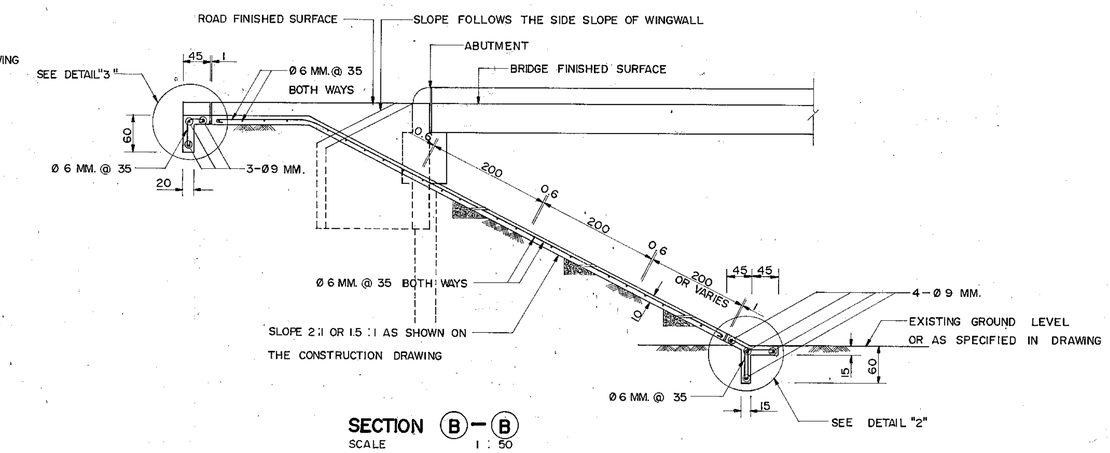


**SECTION (B) - (B)**
SCALE 1 : 50

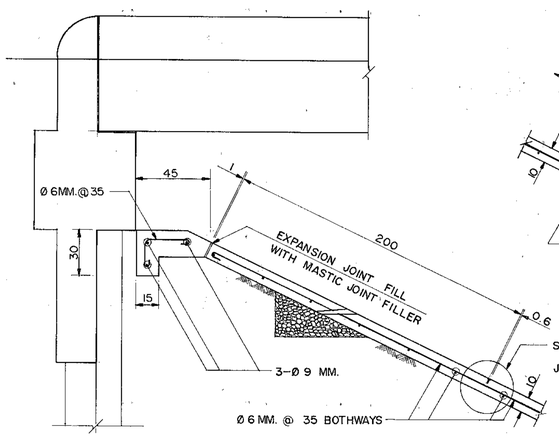


**DETAIL "1"**
SCALE 1 : 20

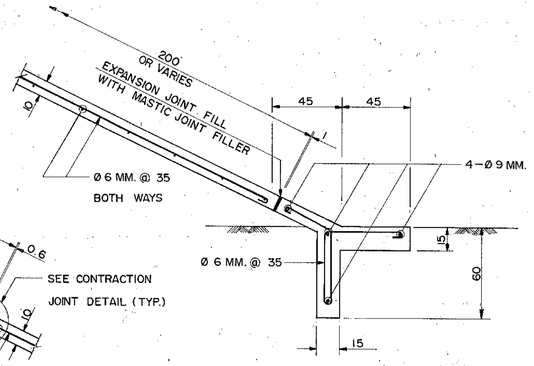


**DETAIL "2"**
SCALE 1 : 20

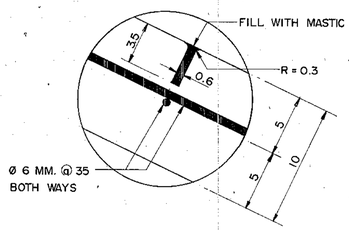


**CONTRACTION JOINT DETAILS**
SCALE 1 : 2.5

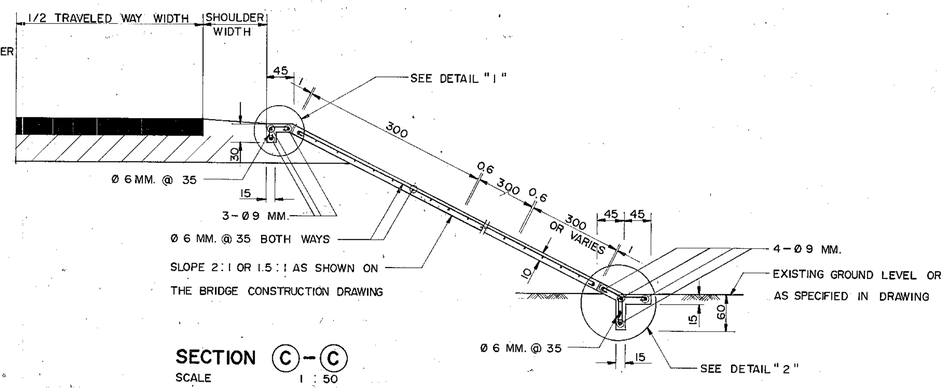


**SECTION (C) - (C)**
SCALE 1 : 50

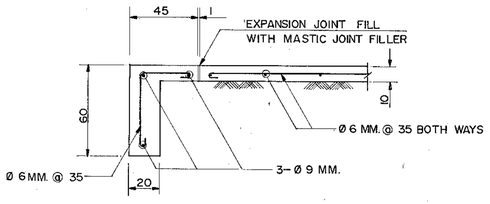


**DETAIL "3"**
SCALE 1 : 20

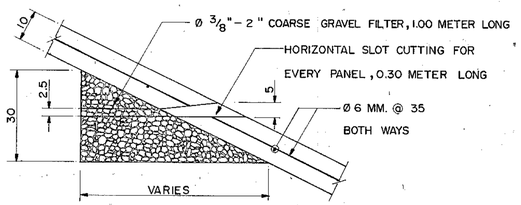


**SLOT CUTTING DETAILS**
SCALE 1 : 10

## NOTES :

1. ALL DIMENSIONS ARE IN CENTIMETERS UNLEES OTHERWISE INDECATED.
2. BEFORE POURING THE CONCRETE SLAB ,THE EXISTING SLOPE SHALL BE WELL PREPARED AND COMPACTED TO MEET THE SIDE SLOPES OF THE ROADBED.
3. WHERE EXISTING SOIL CONDITIONS ARE POOR OR WHERE ROADBED IS VERY HIGH, A DESIGN MUST BE SUBMITTED TO THE ENGINEER FOR APPROVAL PRIOR TO CONSTRUCTION .
4. THE CONCRETE SLAB SHALL BE 10 CM. THICK .
5. CONCRETE SHALL HAVE A MINIMUM ULTIMATE COMPRESSIVE STRENGHTH OF 210 KSC. FOR 15 x 15 x 15 CM. CUBE AT 28 DAYS. AN APPROXIMATE MIX DESIGN PER CUBIC METER IS SUGGESTED AS FOLLOWS :

| | | |
|---|---|---|
| PORTLAND CEMENT TYPE 1 | 320 | KG. ( MIN.) |
| SAND | 0.43 | $M^3$ |
| CRUSHED ROCK OR GRAVEL | 0.86 | $M^3$ |
| CONCRETE SLUMP | 10 | CM. ( MAX.) |

6. REINFORCING STEEL SHALL CONFORM TO TIS. 20 GRADE SR. 24.

# KINGDOM OF THAILAND
## MINISTRY OF TRANSPORT AND COMMUNICATIONS
## DEPARTMENT OF HIGHWAYS

STANDARD DRAWING

CONCRETE SLOPE PROTECTION

| | | |
|---|---|---|
| DESIGNED : D.O.H. & CONSULTANTS | CHECKED : | DATE JULY 1994 |
| SUBMITTED : (DIRECTOR OF LOCATION & DESIGN DIVISION) | | SCALE AS SHOWN |
| APPROVED : (DIRECTOR GENERAL) | | DWG. NO. SP-102 |
| | | SHEET NO. 54 |

## REMARK :

THIS METHOD OF SLOPE PROTECTION IS SUITABLE ONLY IN SPECIFIC LOCATIONS AND CERTAIN CONDITIONS, IT SHOULD BE APPLIED WITH THE FIRM INFORMATIONS CONCERNED AND RECOMMENDED BY THE ENGINEER.

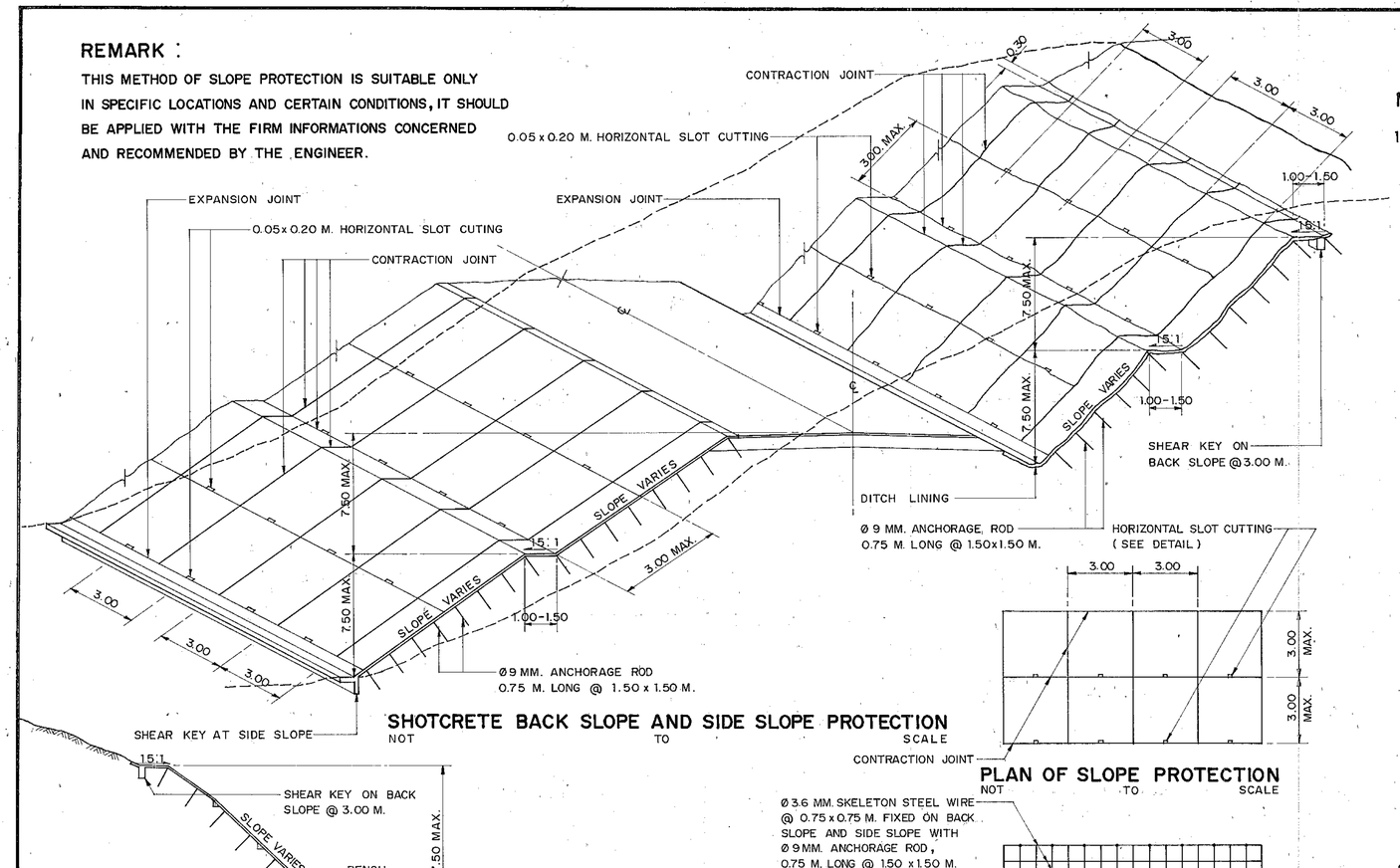


## SHOTCRETE BACK SLOPE AND SIDE SLOPE PROTECTION

NOT TO SCALE




## PLAN OF SLOPE PROTECTION

NOT TO SCALE

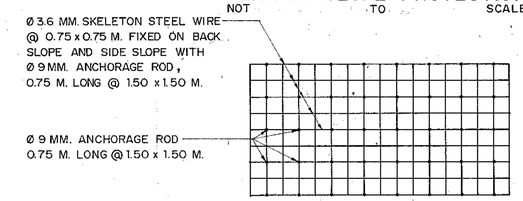


## PLAN OF SKELETON STEEL WIRE

NOT TO SCALE

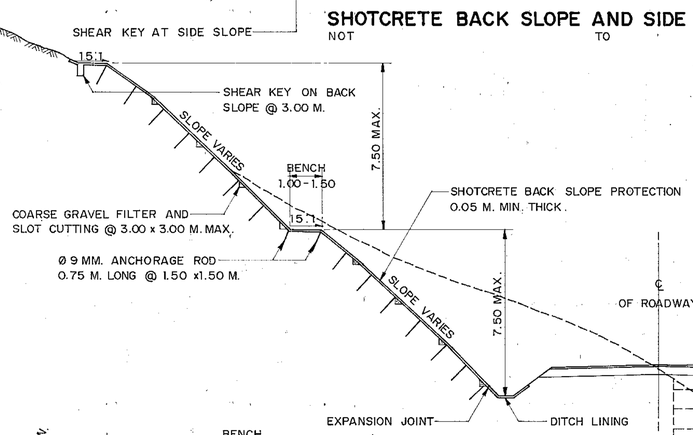


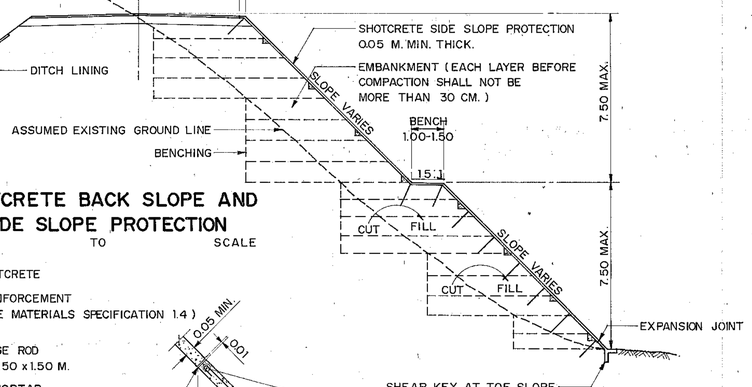


## SHOTCRETE BACK SLOPE AND SIDE SLOPE PROTECTION

NOT TO SCALE

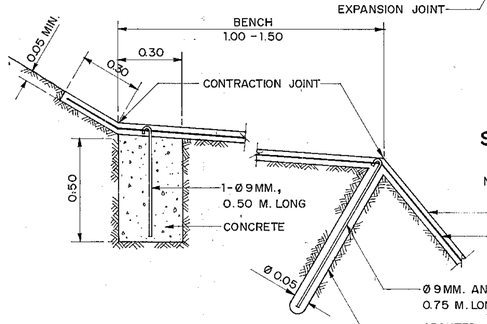


## SHEAR KEY ON BACK SLOPE

NOT TO SCALE

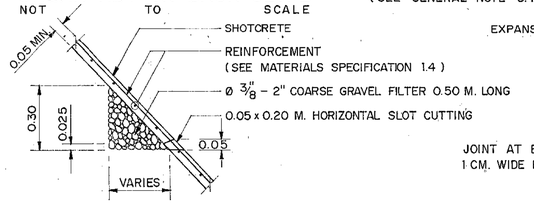


## COARSE GRAVEL FILTER AND SLOT CUTTING DETAILS

NOT TO SCALE

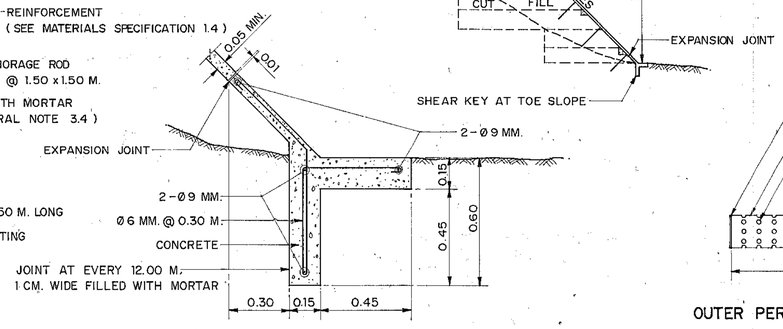


## SHEAR KEY AT TOE SLOPE

NOT TO SCALE

## MATERIALS SPECIFICATION :

### 1. SHOTCRETE

1.1 PORTLAND CEMENT TYPE I SHALL CONFORM TO TIS. 15 AN APPROXIMATE CONCRETE MIX SHALL BE PORTLAND CEMENT : FINE AGGREGATE OR SAND : COARSE AGGREGATE RATIO 1 : 2 : 2 BY VOLUME, WATER - CEMENT RATIO (W/C) = 0.40.

1.2 FINE AGGREGATE AND COARSE AGGREGATE SHALL CONFORM TO ONE OF THE FOLLOWING GRADING REQUIREMENTS.

| SIEVE DESIGNATION | PERCENTAGE BY WEIGHT PASSING | | | |
|---|---|---|---|---|
| | FINE AGGREGATE | COARSE AGGREGATE | | |
| | | TYPE A | TYPE B | TYPE C |
| 1" | – | – | – | 100 |
| 3/4" | – | – | 100 | 90 – 100 |
| 1/2" | – | 100 | 90 – 100 | – |
| 3/8" | 100 | 85 – 100 | 40 – 70 | 20 – 55 |
| NO. 4 | 95 – 100 | 10 – 30 | 0 – 15 | 0 – 10 |
| NO. 8 | 80 – 100 | 0 – 10 | 0 – 5 | 0 – 5 |
| NO. 16 | 50 – 85 | 0 – 5 | – | – |
| NO. 30 | 25 – 60 | – | – | – |
| NO. 50 | 10 – 30 | – | – | – |
| NO. 100 | 2 – 10 | – | – | – |

1.3 SHOTCRETE SHALL HAVE A MINIMUM ULTIMATE COMPRESSIVE STRENGTH OF 250 KSC. FOR Ø 7.5 CM. CYLINDER AT 28 DAYS.

1.4 REINFORCING STEEL FOR SHOTCRETE CAN BE EITHER OF THESE :

1.4.1 WELDED WIRE FABRIC Ø 3.15 MM. @ 0.075 x 0.075 M. WIRE. SHALL CONFORM TO TIS. 194, AND THE WELDED WIRE FABRIC SHALL CONFORM TO AASHTO DESIGNATION M55 - 75 (ASTM DESIGNATION A185 - 73 ) OR AASHTO DESIGNATION M 32 - 78 ( ASTM DESIGNATION A 82 - 76 )

1.4.2 HEXAGONAL STEEL WIRE MESH SHALL CONFORM TO TIS. 208 TYPE "A". THE STEEL WIRE MESH IS 1.25 MM. DIAMETER. THE SIZE OF MESH IS 52 MM., AND PITCH LENGTH IS 55.2 MM. THE SKELETON STEEL WIRE SHALL CONFORM TO TIS. 747.

1.4.3 50 x 50 MM. SQUARE WELDED WIRE FABRIC OF 2 MM. DIAMETER WIRE SHALL CONFORM TO TIS. 747.

1.5 ANCHORAGE ROD SHALL CONFORM TO TIS. 20 GRADE SR. 24.

### 2. SHEARKEY

2.1 CONCRETE SHALL HAVE A MINIMUM ULTIMATE COMPRESSIVE STRENGTH OF 210 KSC. FOR 15 x 15 x 15 CM. CUBE AT 28 DAYS. AN APPROXIMATE MIX DESIGN PER CUBIC METER IS SUGGESTED AS FOLLOWS :

| | |
|---|---|
| PORTLAND CEMENT TYPE I | 350 KG. (MIN.) |
| SAND | 0.43 $M^3$ |
| CRUSHED ROCK OR GRAVEL | 0.86 $M^3$ |
| CONCRETE SLUMP | 10 CM. (MAX.) |

2.2 REINFORCING STEEL SHALL CONFORM TO TIS. 20 GRADE SR. 24.

### 3. FILTER MATERIAL

3.1 SIZE OF COARSE GRAVEL FILTER SHALL BE BETWEEN 3/8" AND 2".

3.2 P.V.C. PIPE SHALL BE CONFORM TO TIS. 17 CLASS 13.5.

3.3 GEOTEXTILE SHALL BE NONWOVENS TYPE, WEIGHT 140 G./$M^2$ (MIN.) SHALL CONFORM TO ASTM. 3776

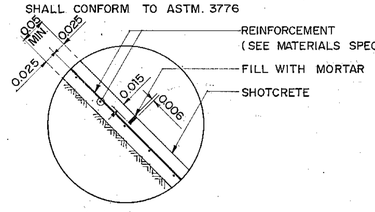


## CONTRACTION JOINT DETAILS

NOT TO SCALE

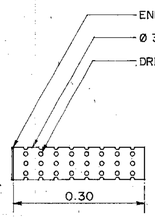


OUTER PERFORATED PIPE

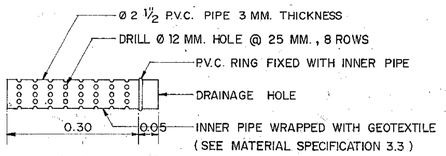


INNER PERFORATED PIPE

## DETAIL OF PERFORATED PIPE FOR DRAINAGE

NOT TO SCALE

## CONSTRUCTION PROCESS :

### 1. BACK SLOPE PROTECTION

1.1 THE SHOTCRETE BACK SLOPE PROTECTION AS SHOWN ON THIS DRAWING SHALL APPLY FOR SOFT ROCK BACK SLOPE ONLY.

1.2 PRIOR TO CONSTRUCTION, THE BACK SLOPE SHALL BE FURNISHED AND WELL COMPACTED TO THE EXISTING BACK SLOPE BUT NOT STEEPER THAN THE SPECIFIED BACK SLOPE AT TYPICAL CROSS SECTION DRAWING.

1.3 IF THE EXISTING BACK SLOPE IS STEEPER THAN THAT MENTIONED IN THE TYPICAL CROSS SECTION DRAWING, THE EXISTING BACK SLOPE MUST BE ADJUSTED SO THAT THE WIDTH OF BENCH IS 1.00 - 1.50 M. AT EVERY 7.50 M. HIGHT.

### 2. SIDE SLOPE PROTECTION

2.1 CUT OFF LOOSED SOIL ON THE EXISTING SIDE SLOPE.

2.2 IN CASE OF THE EXISTING SIDE SLOPE IS FLATTER THAN THAT MENTIONED IN THE TYPICAL CROSS SECTION DRAWING, WELL COMPACT THE EXISTING SIDE SLOPE AND COVER IT WITH SHOTCRETE SIDE SLOPE PROTECTION AS IN THE FIGURE.

2.3 IN CASE OF THE EXISTING SIDE SLOPE IS STEEPER THAN THAT MENTIONED IN THE TYPICAL CROSS SECTION DRAWING, THE EXISTING SIDE SLOPE SHALL BE BENCHING AND FILLED WITH SUBGRADE MATERIAL. THE THICKNESS OF EACH LAYER IS NOT MORE THAN 30 CM., COMPACTED TO 95 % OF THE STANDARD MAXIMUM DRY DENSITY ( DOH.-T. 107/2517 ) AND COVER IT WITH SHOTCRETE SIDE SLOPE PROTECTION AS IN THE FIGURE.

### 3. GENERAL NOTE

3.1 WELDED WIRE FABRIC SHALL BE PUT IN THE MIDDLE OF SHOTCRETE SLAB AND CONNECTED AS THE INNER - LONG SIDE AND WIDE SIDE ARE AT LEAST 15 CM. OVERLAPPING.

3.2 IN CASE OF HEXAGONAL STEEL WIRE MESH OR SQUARE WELDED WIRE IS USED, ITS INNER - LONG SIDE AND WIDE SIDE ARE AT LEAST 10 CM. OVERLAPPING AND TIED WITH STEEL WIRE AT EVERY 10 CM.

3.3 FOR SOFT SOIL OR SAND, THE FIRST LAYER OF SHOTCRETE SHALL BE THIN LAYER AND APPLIED THROUGHLY THE DESIGNATED AREA. AFTER WAITING ABOUT 15 MINUTES OR SETTING TO STIFFEN, THE SECOND LAYER OF SHOTCRETE SHALL BE APPLIED TO MEET THE SPECIFIED THICKNESS.

3.4 FOR GRANULAR SOIL, THE ANCHORAGE ROD Ø 9 MM. SHALL BE GROUTED WITH MORTAR CEMENT : SAND RATIO = 1 : 3 BY VOLUME ( Ø 5 CM. APPROXIMATELY ).

3.5 THE NUMBER OF SLOT AND COARSE GRAVEL FILTER SHALL BE ADDED, IF WATER SEEPAGE IS APPEARED, AS DIRECTED BY THE PROJECT ENGINEER.

3.6 IF SEEPAGE FLOW IS HIGH, PERFORATED PIPE SHALL BE INSTALLED WITH ITEM 3.5, AS DIRECTED OF THE PROJECT ENGINEER.

3.7 MORTAR CEMENT : SAND RATIO = 1 : 3 BY VOLUME, SHALL BE USED TO FILL CONTRACTION AND EXPANSION JOINTS.

3.8 THE BOUNDARY OF SHOTCRETE CONSTRUCTION SHALL BE AT THE BEGINNING AND END OF EROSION AND AT THE BEGINNING, SHOTCRETE SHALL BE CONSTRUCTED AT THE SUITABLE DISTANCE PRIOR TO THE EROSION POINT.

3.9 PAYMENT OF SHOTCRETE SHALL BE MEASURED BY SQUARE METER INCLUDING PREPARED AND COMPACTED EXISTING SLOPE, EXPANSION JOINT, CONTRACTION JOINT, COARSE GRAVEL FILTER, Ø 9 MM. ANCHORAGE ROD, MORTAR GROUTING AND ANY OTHER INCIDENTAL WORKS OF SHOTCRETE

3.10 FOR BACK SLOPE CUTTING OR LOOSED SOIL CUTTING ON SIDE SLOPE, THE PAYMENT SHALL BE EXCAVATION ITEM.

3.11 FOR SUBGRADE MATERIAL FILLING AND COMPACTING ON SIDE SLOPE, THE PAYMENT SHALL BE EMBANKMENT ITEM.

3.12 ALL DIMENSIONS ARE IN METERS UNLESS OTHERWISE INDICATED.

## WARRANTING FEATURES FOR SHOTCRETE CONSTRUCTION

1. THE EXISTING SLOPES MUST BE STABLE.
2. EROSION OF WATER APPEARS BUT NOT SLIDE.
3. NOT RECOMMENDED FOR HIGHWAYS LEADING TO PLACES TO VISIT OR VIEWING POINTS E.G. KHAO KHO, DOI TUNG.

**KINGDOM OF THAILAND**
**MINISTRY OF TRANSPORT AND COMMUNICATIONS**
**DEPARTMENT OF HIGHWAYS**

STANDARD DRAWING

SHOTCRETE BACK SLOPE AND SIDE SLOPE PROTECTION

| | | |
|---|---|---|
| DESIGNED : D.O.H. & CONSULTANTS | CHECKED : | DATE JULY 1994 |
| SUBMITTED : (DIRECTOR OF LOCATION & DESIGN DIVISION) | | SCALE NONE |
| | | DWG. NO. SP-103 |
| APPROVED : FOR (DIRECTOR GENERAL) | | SHEET NO. 55 |

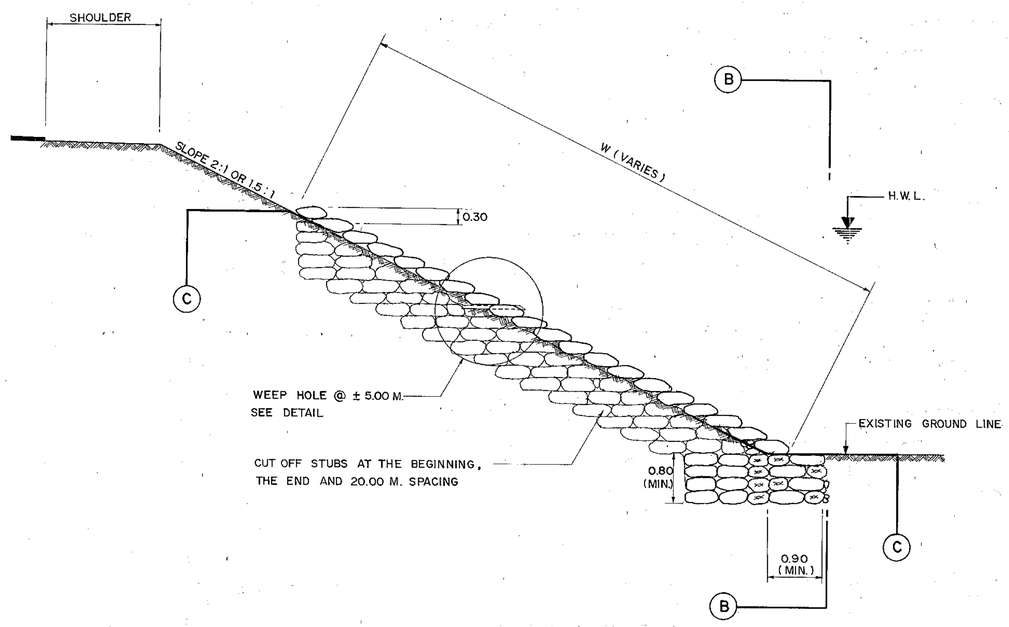


**SECTION (A) – (A)**
SCALE 1 : 50

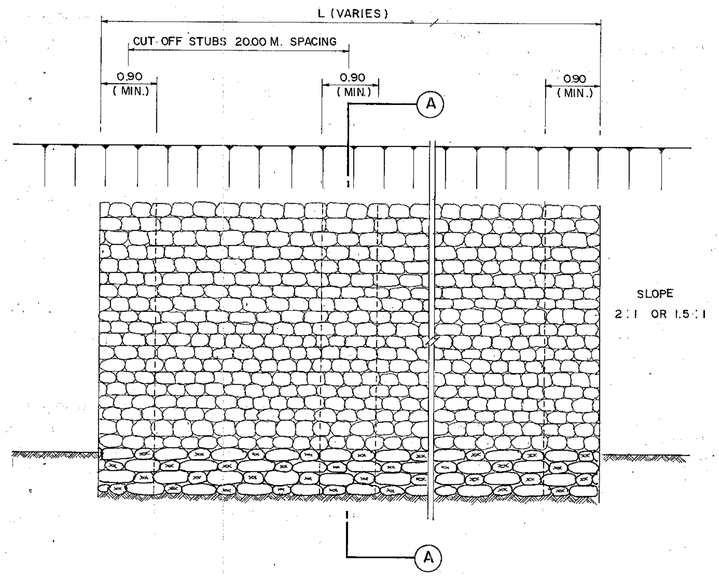


**SECTION (B) – (B)**
SCALE 1 : 50

## NOTES :

1. ALL DIMENSIONS ARE IN METERS UNLESS OTHERWISE INDICATED.
2. THE SACKS SHALL BE MADE OF TOUGH AND DURABLE SYNTHETIC MATERIAL. THE SIZE OF SACK SHALL BE LARGE ENOUGH TO CONTAIN CONCRETE NOT LESS THAN 30 LITERS AND THICKNESS NOT LESS THAN 20 CENTIMETERS WHEN PLACING. THE LENGTH OF SACK SHALL BE LONG ENOUGH TO BE FOLDED.
3. SOIL AGGREGATE MIXTURE FILLED IN THE SACKS SHALL CONSIST OF CEMENT AND AVAILABLE SOIL AGGREGATE OF THE PROPORTION 1 : 10 BY VOLUME. THE MAXIMUM SIZE OF AVAILABLE SOIL AGGREGATE SHALL BE NOT LARGER THAN 8 CENTIMETERS AND THE QUANTITIES OF FINE MATERIAL ( PASSING SIEVE NO. 200 ) SHALL BE NOT MORE THAN 25 %
4. CEMENT AND SOIL SHALL BE MIXED IN DRY CONDITION. AFTER FILLING WITH THE MIXTURED MATERIALS, THE SACK SHALL BE FOLDED AND SEWED AT THE TOP WITH THE SAME MATERIAL AS THE SACKS.
5. THE EMBANKMENT SLOPE SHALL BE COMPACTED SLOPED AS SHOWN IN THE DRAWING.
6. THE SACKS SHALL ALWAYS BE PLACED FROM BOTTOM TO TOP AS SHOWN IN THE DRAWING AND THE TOP OF SACKS ARE INSIDE.
7. AFTER READY PLACED, THE SACKS SHALL BE SPRAYED BY WATER IF TIME USED FOR SOIL AGGREGATE AND CONCRETE MIXING TO WATER SPRAYING IS LONGER THAN 2 HOURS OR THE INTERLOCKING OF SACKS IS NOT GOOD ENOUGH, CEMENT SHALL BE SPRINGLED TO THE JOINTS OF SACKS BEFORE SPRAYING WATER.
8. PAYMENT SHALL BE MEASURED BY SQUARE METERS OF SACKS-CONCRETE INCLUDING CUT OFF STUBS .

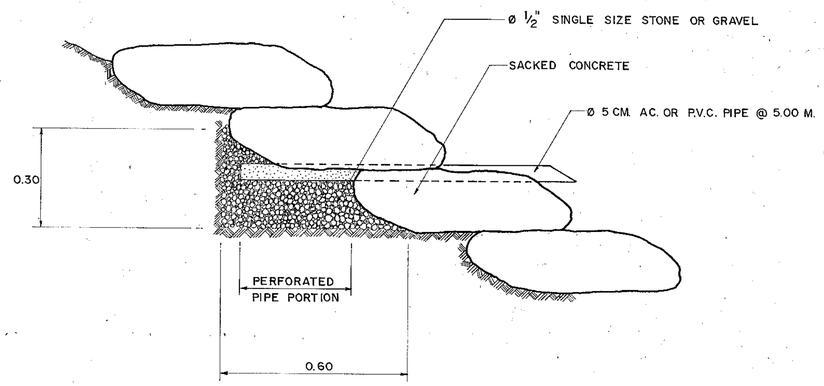


**WEEP HOLE DETAIL**
SCALE 1 : 10

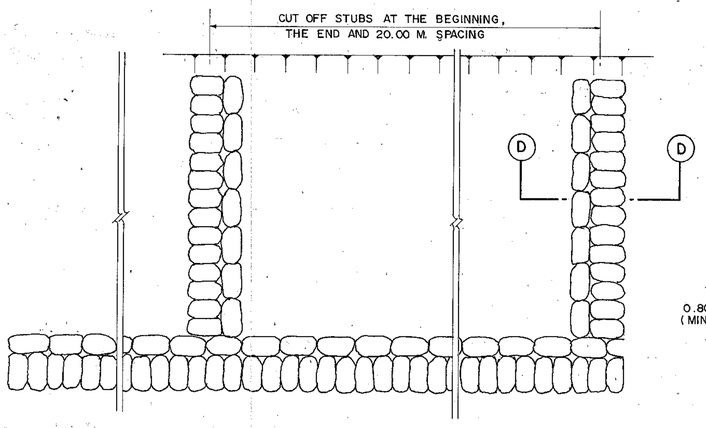


**SECTION (C) – (C) CUT OFF STUBS PLACING**
SCALE 1 : 50

## REMARK :

THIS METHOD OF SLOPE PROTECTION IS SUITABLE ONLY IN SPECIFIC LOCATIONS AND CERTAIN CONDITIONS, IT SHOULD BE APPLIED WITH THE FIRM INFORMATIONS CONCERNED AND RECOMMENDED BY THE ENGINEER.

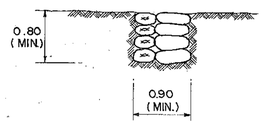


**SECTION (D) – (D)**
SCALE 1 : 50

# KINGDOM OF THAILAND
MINISTRY OF TRANSPORT AND COMMUNICATIONS
DEPARTMENT OF HIGHWAYS

STANDARD DRAWING

SACKED - CONCRETE SLOPE PROTECTION

| | | |
|---|---|---|
| DESIGNED : D.O.H. & CONSULTANTS | CHECKED : | DATE JULY 1994 |
| SUBMITTED : (DIRECTOR OF LOCATION & DESIGN DIVISION) | | SCALE AS SHOWN |
| APPROVED : (DIRECTOR GENERAL) | | DWG. NO. SP-104 |
| | | SHEET NO. 56 |

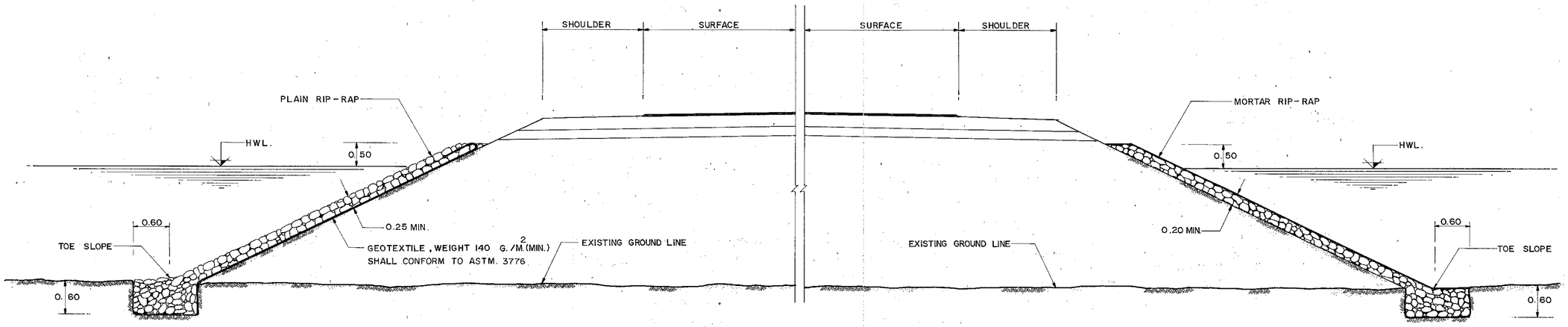


## PLAIN AND MORTAR RIP-RAP PROTECTION

NOT TO SCALE

### PLAIN RIP-RAP CONSTRUCTION

1. EMBANKMENT SLOPES SHALL BE COMPACTED AND SHAPED TO TYPICAL CROSS-SECTION SPECIFIED.
2. STONE USED FOR PLAIN RIP-RAP SHALL WEIGH BETWEEN 25-70 KG. EACH AND AT LEAST 75 PERCENT SHALL WEIGH MORE THAN 45 KG. WITH KEY STONE SIZE IN SUITABLE.
3. THE LARGEST STONE SHALL BE PLACED FIRST. THE INTERSTICES SHALL BE FILLED WITH SMALL STONES. THE THICKNESS OF PLAIN RIP-RAP SHALL NOT LESS THAN 25 CENTIMETERS.
4. THE PLACING OF STONES SHALL BE AT LEAST 60 CM. UNDER EXISTING GROUND LEVEL.
5. STONES SHALL BE CONSIDERED TO FILL AT TOE SLOPE AS SUITABLY IN CASE OF EXISTING GROUND ARE SOFT.

### MORTAR RIP-RAP CONSTRUCTION

1. EMBANKMENT SLOPES SHALL BE COMPACTED AND SHAPED TO TYPICAL CROSS-SECTION SPECIFIED.
2. STONE USED FOR MORTAR RIP-RAP SHALL WEIGH BETWEEN 15-40 KG. EACH AND AT LEAST 50 PERCENT SHALL WEIGH MORE THAN 30 KG. WITH KEY STONE SIZE IN SUITABLE.
3. THE LARGEST STONE SHALL BE PLACED FIRST. THE INTERSTICES SHALL BE FILLED WITH SMALL STONES. THE THICKNESS OF MORTAR RIP-RAP SHALL NOT LESS THAN 20 CENTIMETERS.
4. THE VOIDS BETWEEN STONE SHALL BE FILLED WITH MORTAR CEMENT : SAND RATIO 1:1 BY VOLUME.
5. THE PLACING OF STONES SHALL BE AT LEAST 60 CM. UNDER EXISTING GROUND LEVEL.
6. STONE SHALL BE CONSIDERED TO FILL AT TOE SLOPE AS SUITABLY IN CASE OF EXISTING GROUND ARE SOFT.

### NOTES :

1. ALL DIMENSIONS ARE IN METERS UNLESS OTHERWISE INDICATED.

### REMARK :

THIS METHOD OF SLOPE PROTECTION IS SUITABLE ONLY IN SPECIFIC LOCATIONS AND CERTAIN CONDITIONS, IT SHOULD BE APPLIED WITH THE FIRM INFORMATIONS CONCERNED AND RECOMMENDED BY THE ENGINEER.

| | | |
|---|---|---|
| **KINGDOM OF THAILAND**<br>MINISTRY OF TRANSPORT AND COMMUNICATIONS<br>DEPARTMENT OF HIGHWAYS | | |
| STANDARD DRAWING<br>RIP - RAP PROTECTION FOR EMBANKMENT SLOPE | | |
| DESIGNED : D.O.H. & CONSULTANTS | CHECKED : | DATE JULY 1994 |
| SUBMITTED : (DIRECTOR OF LOCATION & DESIGN DIVISION) | | SCALE NONE |
| | | DWG. NO. SP-105 |
| APPROVED : (DIRECTOR GENERAL) | | SHEET NO. 57 |

## SPECIAL PROVISION :

1. GABIONS SHALL BE AS SPECIFIED IN THE " SPECIFICATION OF GABIONS ", AND BE OF THE SIZES STATED IN THE BILL OF QUANTITIES .

2. ASSEMBLY AND ERECTION OF GABIONS SHALL BE AS SPECIFIED IN THE " SPECIFICATION FOR GABIONS CONSTRUCTION ".

3. FILLING MATERIALS :

FILLING MATERIALS SHALL NOT BE LESS THAN 100 MM. OR LARGER THAN 250 MM. AND BE OF TYPES A OR B AS SPECIFIED IN THE "TABLE OF FILLING MATERIALS " WHERE THE SPECIFIED FILLING MATERIALS CAN NOT BE OBTAINED , FILLING MATERIALS OF TYPES C , D OR E MAY BE USED BY THE APPROVAL OF THE ENGINEER OF DESIGN .

4. PERVIOUS BACKFILL :

TYPES OF PERVIOUS BACKFILL MATERIALS SHALL BE COARSE-GRAINED SOILS OR GRANULAR MATERIALS I.E. CLEAN SAND, GRAVEL OR CRUSHED ROCK, SHALL BE HARD DURABLE AND CLEAN AND SHALL BE FREE FROM ORGANIC MATERIALS, CLAY BALLS AND OTHER DELETERIOUS SUBSTANCE. LATERITE OR CONCRETIONARY MATERIAL SHALL NOT BE USED.

SAND USED FOR PERVIOUS BACKFILL MATERIAL SHALL CONFORM TO THE FOLLOWING GRADING REQUIRMENTS.

| SIEVE DESIGNATION | PERCENTAGE BY WEIGHT PASSING |
|---|---|
| 3/8" | 100 |
| NO. 4 | 95 – 100 |
| NO. 16 | 45 – 80 |
| NO. 50 | 10 – 30 |
| NO. 100 | 2 – 10 |

GRAVEL AND CRUSHED ROCK SHALL CONFORM TO ONE OF THE FOLLOWING GRADING REQUIREMENTS.

| SIEVE DESIGNATION | PERCENTAGE BY WEIGHT PASSING | | | |
|---|---|---|---|---|
| | TYPE B | TYPE C | TYPE D | TYPE E |
| 2" | 100 | – | – | – |
| 1 1/2" | 70-100 | 100 | – | – |
| 1" | 55-85 | 75-100 | 100 | – |
| 3/4" | 50-80 | 60-90 | 70-100 | 100 |
| 3/8" | 40-70 | 45-75 | 58-75 | – |
| NO. 4 | 30-60 | 30-60 | 35-65 | 45-80 |
| NO. 10 | 20-50 | 20-50 | 25-50 | 30-60 |
| NO. 40 | 10-30 | 10-30 | 15-30 | 20-35 |
| NO. 200 | 0-2 | 0-2 | 0-2 | 0-2 |

5. BACKFILL COMPACTION

a) BACKFILL MATERIALS SHALL BE PLACED IN THIN LAYERS NOT THICKER THAN 20 CM. EACH. EACH LAYER SHALL BE COMPACTED BEFORE THE NEXT ONE IS PLACED.

b) BACKFILL MATERIALS SHALL BE COMPACTED BY HAND-OPERATED OR OTHER LIGHTWEIGHT COMPACTORS. CARE MUST BE MADE NOT TO OVERCOMPACT THE BACKFILL SINCE OVERCOMPACTION WILL CAUSE EXCESSIVE EARTH PRESSURE.

6. THE ENGINEER OF DESIGN SHALL MAKE ANY VARIATION OF THE FORM QUALITY OR QUANTITY OF THE WORKS OR ANY PART THERE OF THAT MAY BE NECESSARY.

7. NO ANY VARIATION OR AMENDMENT SHALL BE MADE WITHOUT THE APPROVAL OF THE ENGINEER OF DESIGN.

## REMARK :

**THIS METHOD OF SLOPE PROTECTION IS SUITABLE ONLY IN SPECIFIC LOCATIONS AND CERTAIN CONDITIONS , IT SHOULD BE APPLIED WITH THE FIRM INFORMATIONS CONCERNED AND RECOMMENDED BY THE ENGINEER .**

### BILL OF QUANTITIES

| ITEM. | DESCRIPTION: TYPES | DESCRIPTION: SIZES | UNIT. | QUANTITY: APRON LAYER | 1st LAYER | 2nd LAYER | 3rd LAYER | 4th LAYER | 5th LAYER | TOTAL |
|---|---|---|---|---|---|---|---|---|---|---|
| 1. | GABIONS GALVANIZED 80 x | 4x1x0.5 M. | NO. | 292 | – | – | – | – | – | 292 |
| 2. | 100 MM. MESH, 2.7 MM. WIRE | 2x1x0.5 M. | NO. | 4 | – | – | – | – | – | 4 |
| 3. | CORE WITH NECESSARY BINDING WIRE | 1.5x1x0.5 M. | NO. | 36 | – | – | – | – | – | 36 |
| 4. | GABIONS GALVANIZED 100 x | 4x1x1 M. | NO. | – | 152 | 70 | 105 | 36 | 68 | 431 |
| 5. | 120 MM. MESH, 2.7 MM. WIRE | 3x1x1 M. | NO. | – | – | 6 | 8 | – | – | 14 |
| 6. | CORE WITH NECESSARY | 2x1x1 M. | NO. | – | – | 1 | – | 1 | 8 | 10 |
| 7. | BINDING WIRE | 1.5x1x1 M. | NO. | – | – | 150 | – | 146 | – | 296 |
| 8. | ASSEMBLE, PLACE IN POSITION AND PACK WITH FILLING MATERIALS IN ITEM 1 TO 7 INCLUDING FOR TYING DOWN LIDS AFTER FILLING | | CU.M. | | | | | | | 2,845 |
| 9. | PERVIOUS BACKFILL MATERIALS PLACE IN POSITION AND COMPACT | | CU.M. | | | | | | | 1,800 |
| 10. | EMBANKMENT MATERIAL | | CU.M. | | | | | | | APPROX. 3,700 |

### TABLE OF FILLING MATERIALS

| TYPE | FILLING MATERIAL | WEIGHT OF MATERIAL ( KG. / CU.M. ) |
|---|---|---|
| A | BASALT | 1,650 |
| | GRANITE | 1,600 |
| B | SHINGLE & SLAG | 1,500 |
| | LIME STONE | 1,440 |
| C | SAND STONE | 1,390 |
| | BROKEN CONCRETE | 1,340 |
| D | BRICK | 1,240 |
| E | ORTHERS AS APPROVAL OF THE LOCATION AND DESIGN DIVISION | |

REMARKS : THIS TABLE OF DIFFERENT FILLING MATERIALS INCLUDES ALLOWANCE FOR 40% VOIDS

**KINGDOM OF THAILAND**
**MINISTRY OF TRANSPORT AND COMMUNICATIONS**
**DEPARTMENT OF HIGHWAYS**

STANDARD DRAWING

SPECIAL PROVISION OF GABIONS

| | | |
|---|---|---|
| DESIGNED : D.O.H. & CONSULTANTS | CHECKED : | DATE JULY 1994 |
| SUBMITTED : (DIRECTOR OF LOCATION & DESIGN DIVISION) | | SCALE NONE |
| APPROVED : (DIRECTOR GENERAL) | | DWG. NO. SP-106 |
| | | SHEET NO. 58 |

## TABLES OF WEIGHTS AND MEASUREMENTS

### GALVANIZED BOX GABIONS WITH DIAPHRAGMS

MESH TYPE 100 x 120 MM. GALVANIZED TO SPECIFICATION

| DIMENSIONS (M.) | | | DIAPHRAGMS | APPROXIMATE WEIGHT (KG) | |
|---|---|---|---|---|---|
| LENGTH | WIDTH | HEIGHT | | WIRE Ø 2.7 MM. | WIRE Ø 3.0 MM. |
| 1.5 | 1 | 0.5 | — | 8.600 | 10.300 |
| 2 | 1 | 0.5 | 1 | 10.800 | 13.500 |
| 3 | 1 | 0.5 | 2 | 14.400 | 19.200 |
| 4 | 1 | 0.5 | 3 | 19.000 | 25.000 |
| 1.5 | 1 | 1 | — | 11.800 | 13.800 |
| 2 | 1 | 1 | 1 | 15.200 | 18.200 |
| 3 | 1 | 1 | 2 | 20.400 | 25.800 |
| 4 | 1 | 1 | 3 | 27.000 | 34.000 |

THE WEIGHTS INDICATED IN THE TABLE DO NOT INCLUDE BINDING AND CONNECTING WIRE, AND ARE SUBJECT TO THE USUAL TOLERANCES.

MESH TYPE 80 x 100 MM. GALVANIZED TO SPECIFICATION

| DIMENSIONS (M.) | | | DIAPHRAGMS | APPROXIMATE WEIGHT (KG.) | |
|---|---|---|---|---|---|
| LENGTH | WIDTH | HEIGHT | | WIRE Ø 2.7 MM. | WIRE Ø 3.0 MM. |
| 1.5 | 1 | 0.3 | — | 8.600 | 10.500 |
| 2 | 1 | 0.3 | 1 | 10.100 | 12.500 |
| 3 | 1 | 0.3 | 2 | 14.600 | 17.800 |
| 4 | 1 | 0.3 | 3 | 18.800 | 23.100 |
| 1.5 | 1 | 0.5 | — | 9.200 | 11.500 |
| 2 | 1 | 0.5 | 1 | 12.600 | 15.400 |
| 3 | 1 | 0.5 | 2 | 18.000 | 21.800 |
| 4 | 1 | 0.5 | 3 | 23.200 | 28.200 |
| 1.5 | 1 | 1 | — | 12.800 | 16.000 |
| 2 | 1 | 1 | 1 | 17.300 | 21.300 |
| 3 | 1 | 1 | 2 | 24.700 | 30.000 |
| 4 | 1 | 1 | 3 | 32.000 | 39.000 |

### PVC. COATED BOX GABIONS

MESH TYPE 100 x 120 MM. GALVANIZED TO SPECIFICATION

| DIMENSIONS (M.) | | | DIAPHRAGMS | APPROXIMATE WEIGHT (KG.) |
|---|---|---|---|---|
| LENGTH | WIDTH | HEIGHT | | |
| 1.5 | 1 | 0.5 | — | 8.800 |
| 2 | 1 | 0.5 | 1 | 12.800 |
| 3 | 1 | 0.5 | 2 | 18.000 |
| 4 | 1 | 0.5 | 3 | 23.200 |
| 1.5 | 1 | 1 | — | 12.800 |
| 2 | 1 | 1 | 1 | 17.000 |
| 3 | 1 | 1 | 2 | 24.000 |
| 4 | 1 | 1 | 3 | 31.500 |

THE WEIGHTS INDICATED IN THE TABLE DO NOT INCLUDE BINDING AND CONNECTING WIRE, AND ARE SUBJECT TO THE USUAL TOLERANCES.

MESH TYPE 80 x 100 MM. GALVANIZED TO SPECIFICATION

| DIMENSIONS (M.) | | | DIAPHRAGMS | APPROXIMATE WEIGHT (KG.) |
|---|---|---|---|---|
| LENGTH | WIDTH | HEIGHT | | |
| 1.5 | 1 | 0.3 | — | 9.100 |
| 2 | 1 | 0.3 | 1 | 11.500 |
| 3 | 1 | 0.3 | 2 | 16.700 |
| 4 | 1 | 0.3 | 3 | 21.700 |
| 1.5 | 1 | 0.5 | — | 10.800 |
| 2 | 1 | 0.5 | 1 | 14.500 |
| 3 | 1 | 0.5 | 2 | 21.000 |
| 4 | 1 | 0.5 | 3 | 27.000 |
| 1.5 | 1 | 1 | — | 15.400 |
| 2 | 1 | 1 | 1 | 20.000 |
| 3 | 1 | 1 | 2 | 28.800 |
| 4 | 1 | 1 | 3 | 37.200 |

## 1. GENERAL

GABIONS SHALL CONSIST OF WOVEN STEEL WIRE MESH BOXES OF APPROVED MODULE AS SPECIFIED IN THE CIRCULAR OF THE SENIOR COUNCIL OF THE ITALIAN LL.PP. NO. 2078 OF THE 27.8.1962 OR BY FEDERAL SPECIFICATION QQ.-W-461g IN THE UNITED STATES OF AMERICA, OR BY THE BRITISH STANDARD INSTITUTION 443-1961 AND OR SIMILAR APPROVED, AND BE OF THE SIZES STATED IN THE "TABLES OF WEIGHTS AND MEASUREMENTS." PARTICULAR CARE SHALL BE EXERCISED THROUGHOUT CONSTRUCTION TO ENSURE TIGHTNESS OF MESH, WELL PACKED FILLING WITH MINIMUM OF VOIDS, AND SECURE LACING. THE EXPOSED FACES OF COMPLETED WORK SHALL PRESENT A NEAT FACE AND LINE, FREE OF EXCESSIVE BULGES OR DEPRESSIONS.

## 2. GABION FABRIC

(a) **MESH**: MESH OPENINGS SHALL BE HEXAGONAL IN SHAPE, THE MINIMUM DIMENSION OF WHICH SHALL NOT EXCEED 105 MM. IN THE CASE OF 100 x 120 MM. MESH, AND NOT EXCEED 83 MM. IN THE CASE OF 80 x 100 MM. MESH.

(b) **MESH JOINTS**: ALL JOINTS SHALL BE FLEXIBLE AND CONSIST OF NOT LESS THAN ONE AND ONE HALF FULL TURNS.

(c) **GALVANIZING**: ALL WIRE USED SHALL BE GALVANIZED TO BSS 443/1969 OR EQUIVALENT, PRIOR TO WEAVING OF THE MESH.

### GALVANIZED GABIONS

(d) **MESH WIRE**: THE DIAMETER OF THE MESH WIRE SHALL BE THAT STATED IN THE RELEVANT ITEM IN THE BILL OF QUANTITIES (± 2.5 %)

(e) **BINDING WIRE**: THE DIAMETER OF THE WIRE USED FOR BINDING AND LACING SHALL BE 2.2 MM. (± 2.5 %)

(f) **SELVEDGE WIRE**: SELVEDGE WIRE 3.4 MM. DIAMETER WHERE THE MESH WIRE DIAMETER IS 2.7 MM. AND 3.9 MM. DIAMETER WHERE THE MESH WIRE DIAMETER IS 3.00 MM. SHALL BE INCORPORATED ALONG THE EDGES OF THE WIRE MESH.

### PVC. COATED GABIONS

(g) **PVC. COATING**: WHERE STATED IN THE BILL OF QUANTITIES OR WHERE SPECIFIED BY THE ENGINEER, ALL WIRE SHALL BE ADDITIONALLY COATED WITH A MINIMUM 0.55 MM. THICKNESS OF BLACK PVC. WHICH SHALL BE CAPABLE OF RESISTING DELETERIOUS EFFECTS OF IMMERSION IN SALT WATER, EXPOSURE TO ULTRA VIOLET LIGHT AND ABRASION TO THE SATISFACTION OF THE ENGINEER, AND RETAIN THESE CHARACTERISTICS AFTER A PERIOD OF NOT LESS THAN 3,000 HOURS UNDER TEST IN ACCORDANCE WITH ASTM. E 42-65.

(h) **MESH WIRE**: THE DIAMETER OF THE MESH WIRE CORE SHALL BE THAT STATED IN THE BILL OF QUANTITIES.

(i) **BINDING WIRE**: THE DIAMETER OF THE CORE OF THE PVC. COATED WIRE USED FOR BINDING AND VACING SHALL BE 2.2 MM.

(j) **SELVEDGE WIRE**: SELVEDGE WIRE WHOSE CORE DIAMETER IS 3.4 MM. SHALL BE INCORPORATED ALONG THE EDGES OF THE WIRE MESH EXCEPT IN THE CASE OF THE 80 x 100 MM. MESH IN 2.2 MM. WIRE CORE, WHERE IT SHALL BE 2.7 MM.

### REMARK :

**THIS METHOD OF SLOPE PROTECTION IS SUITABLE ONLY IN SPECIFIC LOCATIONS AND CERTAIN CONDITIONS, IT SHOULD BE APPLIED WITH THE FIRM INFORMATIONS CONCERNED AND RECOMMENDED BY THE ENGINEER.**

**KINGDOM OF THAILAND**
**MINISTRY OF TRANSPORT AND COMMUNICATIONS**
**DEPARTMENT OF HIGHWAYS**

STANDARD DRAWING

SPECIFICATION OF GABIONS

| | | |
|---|---|---|
| DESIGNED: D.O.H. & CONSULTANTS | CHECKED: | DATE JULY 1994 |
| SUBMITTED: (DIRECTOR OF LOCATION & DESIGN DIVISION) | | SCALE NONE |
| | | DWG. NO. SP-107 |
| APPROVED: (DIRECTOR GENERAL) | | SHEET NO. 59 |

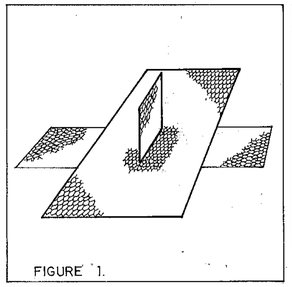

FIGURE 1.

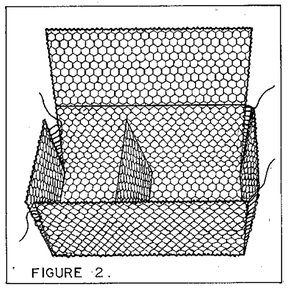

FIGURE 2.

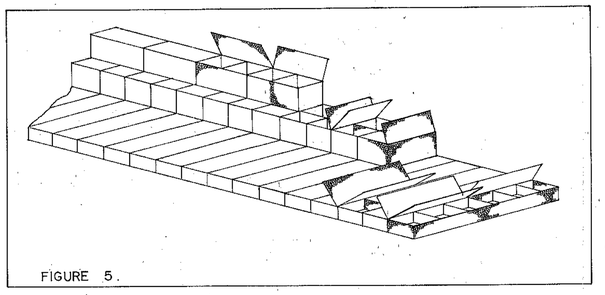

FIGURE 5.

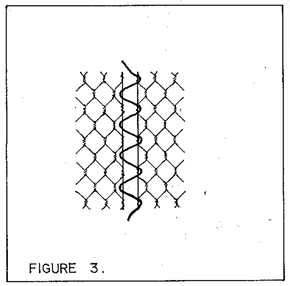

FIGURE 3.

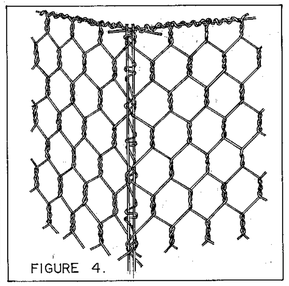

FIGURE 4.

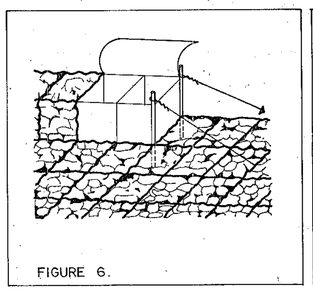

FIGURE 6.

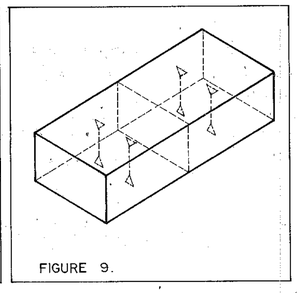

FIGURE 9.

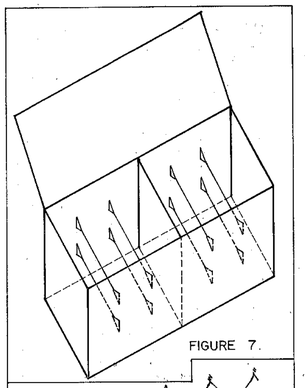

FIGURE 7.

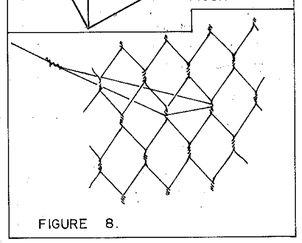

FIGURE 8.

## GENERAL NOTES :

1. THE SPECIFICATION COVERS CONSTRUCTION IN BOTH GALVANIZED AND PVC. COATED GABIONS.
2. CLAUSE 6 SHOULD ONLY BE INCLUDED WHERE THE GABION MESH MUST BE CUT AND FOLDED TO FORM MITRE JOINTS, ANGLES, CURVES OR SLOPES IN THE STRUCTURES WHICH ARE NOT POSSIBLE TO OBTAIN WITH THE STANDARD RECTANGULAR GABIONS.

### 1. ASSEMBLY

PRIOR TO ASSEMBLY, THE GABION MATERIAL SHALL BE OPENED OUT FLAT ON THE GROUND AND STRETCHED TO REMOVE ALL KINKS AND BENDS. (FIGURE.1)

THE GABION BOXES SHALL THEN BE ASSEMBLED INDIVIDUALLY, BY RAISING THE SIDES, ENDS AND DIAPHRAGMS, ENSURING THAT ALL CREASES ARE IN THE CORRECT POSITION AND THAT THE TOPS OF ALL FOUR SIDES ARE EVEN.

THE FOUR CORNERS OF THE GABION BOXES SHALL BE LACED FIRST, FOLLOWED BY THE EDGES OF INTERNAL DIAPHRAGMS TO THE SIDES (FIGURE.2)

IN ALL CASES, LACING SHALL COMMENCE AT THE TOP OF THE BOX BY TWISTING THE END OF THE LACING WIRE AROUND THE SELVEDGE. IT SHALL THEN BE PASSED ROUND THE TWO EDGES BEING JOINED, THROUGH EACH MESH IN TURN, AND SECURELY TIED OFF AT THE BOTTOM. THE ENDS OF ALL LACING WIRES SHALL BE TURNED TO THE INSIDE OF BOX ON COMPLETION OF EACH LACING OPERATION. (FIGURE.3 & FIGURE.4)

### 2. ERECTION

ONLY ASSEMBLED BOXES, OR GROUPS OF BOXES, SHALL BE POSITIONED IN THE STRUCTURE. THE SIDE, OR END, FROM WHICH WORK IS TO PROCEED, SHALL BE SECURED EITHER TO COMPLETED WORK, OR BY RODS OR STAKES DRIVEN INTO THE GROUND AT THE CORNERS. THESE MUST BE SECURED AND REACH AT LEAST TO THE TOP OF THE GABION BOX.

FURTHER GABION BOXES SHALL THEN BE POSITIONED IN THE STRUCTURE AS REQUIRED, EACH BEING SECURELY LACED TO THE PRECEEDING ONE AT ALL CORNERS AND DIAPHRAGM POINTS. (FIGURE. 5)

### 3. STRETCHING

FINAL STRETCHING OF THE GABION BOXES SHALL BE CARRIED OUT USING A WIRE STRAINER OR WINCH OF AT LEAST ONE TON CAPACITY, FIRMLY SECURED TO THE FREE END OF THE ASSEMBLED GABION BOXES. (FIGURE. 6)

WHILST UNDER TENSION THE GABION BOXES SHALL BE SECURELY LACED ALONG ALL EDGES, (TOP, BOTTOM AND SIDES) AND AT DIAPHRAGM POINTS, TO ALL ADJACENT BOXES. TIGHTNESS OF MESH, WELL PACKED FILLING AND SECURE LACING IS ESSENTIAL IN ALL STRUCTURES.

### 4. FILLING

FILLING SHALL BE CARRIED OUT ONLY WHILST GABION BOXES ARE UNDER TENSION.

FILLING MATERIAL SHALL NOT BE LESS THAN 100 MM. OR LARGER THAN 250 MM. AND SHALL BE SO PLACED TO PRODUCE A NEAT FACE AND LINE, WITH A MINIMUM OF VOIDS.

WHERE SUITABLE FILLING MATERIAL CANNOT BE OBTAINED, THE ENGINEER MAY APPROVE A PERCENTAGE OF SMALLER FILLING MATERIAL IN WHICH CASE LARGE MATERIAL SHALL BE PLACED ON OUTER EXPOSED FACES, AND SMALLER MATERIAL ON THE INSIDE AS A "CORE".

ONLY MECHANICAL EQUIPMENT APPROVED BY THE ENGINEER MAY BE USED FOR FILLING OPERATIONS.

INTERNAL HORIZONTAL BRACING WIRE (USE BINDING WIRE) SHALL BE PROVIDED AT 330 MM. VERTICAL CENTERS IN 1 M. DEEP UNITS, AT A RATIO OF 4 TO 1 CU.M. (FIGURE.7) THESE BRACING WIRES SHALL BE WRAPPED ROUND TWO MESH WIRES (FIGURE.8) AND EXTENDED FROM FRONT TO BOCK, SO POSITIONED TO ENSURE A NEAT FACE AND LINE, FREE OF EXCESSIVE BULGES AND DEPRESSIONS ON COMPLETION TO THE SATISFACTION OF THE ENGINEER. GABION BOXES SHALL BE FILLED IN STAGES AND HORIZONTAL BRACING WIRES INSERTED AS FILLING IS BROUGHT UP.

SIMILAR BRACING WIRES, USED VERTICALLY (FIGURE. 9) MAY BE REQUIRED IN 0.5 M. DEEP GABIONS, AT SPACINGS SPECIFIED BY THE ENGINEER, WHERE SUCH UNITS ARE USED IMMEDIATELY DOWN-STREAM OF WEIRS OR IN OTHER CASES WHERE WATER FALLS DIRECTLY ON TO THE GABIONS OR WHERE A NEAT FACE IS REQUIRED.

TENSION ON THE GABION BOXES SHALL BE RELEASED ONLY WHEN SUFFICIENTLY FULL TO PREVENT THE MESH FROM SLACKENING.

GABION BOXES SHALL BE OVERFILLED BY 20 TO 50 MM. ABOVE THEIR TOPS TO ALLOW FOR SUBSEQUENT SETTLEMENT. 100 MM. FILLING MATERIAL MAY BE USED FOR THIS PURPOSE.

### 5. FINAL WIRING

CLOSING AND WIRING DOWN OF LIDS SHALL PROCEED AS SOON AS PRACTICABLE AFTER FILLING OPERATIONS, AND CERTAINLY IN THE LIKELIHOOD OF STORMS OR FLOODS DURING CONSTRUCTION.

LIDS SHALL BE STRETCHED TIGHT OVER THE FILLING WITH BARS AND WIRED DOWN SECURELY THROUGH EACH MESH ALONG ALL EDGES, ENDS AND DIAPHRAGMS. THE ENDS OF ALL TYING AND BRACING WIRES SHALL BE TURNED INTO THE GABION BOX ON COMPLETION OF ALL LACING OPERATIONS. TIGHTNESS OF MESH, WELL PACKED FILLING AND SECURE LACING IS ESSENTIAL IN ALL STRUCTURES.

### 6. CUTTING AND FOLDING MESH

WHERE SHOWN ON THE DRAWINGS OR OTHERWISE DIRECTED BY THE ENGINEER, THE GABION MESH SHALL BE CUT, FOLDED AND WIRED TOGETHER TO FORM MITER JOINTS, ANGLES, CURVES OR SLOPES WHICH ARE NOT POSSIBLE TO OBTAIN IN THE STRUCTURES WITH THE STANDARD RECTANGULAR GABIONS. THE MESH MUST BE CLEANLY CUT, AND THE SURPLUS MESH CUT COMPLETELY OUT, OR FOLDED BACK OR ON TO, AND NEATLY WIRED TO AN ADJACENT GABION FACE. THE CUT EDGES OF THE MESH SHALL BE SECURELY LACED TOGETHER WITH BINDING WIRE IN THE MANNER SPECIFIED UNDER ASSEMBLY ABOVE.

THE ASSEMBLY, ERECTION, STRETCHING, FILLING AND FINAL WIRING OF THE RE-SHAPED GABIONS SHALL OTHERWISE BE CARRIED OUT AS SPECIFIED ABOVE.

### 7. SPECIAL FINISH

WHERE SPECIFIED BY THE ENGINEER THE OUTER FACE OF THE GABIONS SHALL BE CAREFULLY PACKED OUT BY HAND WITH SELECTED (IGNEOUS OR LIMESTONE, ETC.) STONE OF A SIZE 100 MM. TO 250 MM.

## REMARK :

**THIS METHOD OF SLOPE PROTECTION IS SUITABLE ONLY IN SPECIFIC LOCATIONS AND CERTAIN CONDITIONS, IT SHOULD BE APPLIED WITH THE FIRM INFORMATIONS CONCERNED AND RECOMMENDED BY THE ENGINEER.**

**KINGDOM OF THAILAND**
**MINISTRY OF TRANSPORT AND COMMUNICATIONS**
**DEPARTMENT OF HIGHWAYS**

STANDARD DRAWING

SPECIFICATION FOR GABIONS CONSTRUCTION

| | | |
|---|---|---|
| DESIGNED : D.O.H. & CONSULTANTS | CHECKED : | DATE JULY 1994 |
| SUBMITTED : (DIRECTOR OF LOCATION & DESIGN DIVISION) | | SCALE. NONE |
| APPROVED : (DIRECTOR GENERAL) | | DWG. NO. SP-108 |
| | | SHEET NO. 60 |

**REMARK :** THIS METHOD OF SLOPE PROTECTION IS SUITABLE ONLY IN SPECIFIC LOCATIONS AND CERTAIN CONDITIONS, IT SHOULD BE APPLIED WITH THE FIRM INFORMATIONS CONCERNED AND RECOMMENDED BY THE ENGINEER.

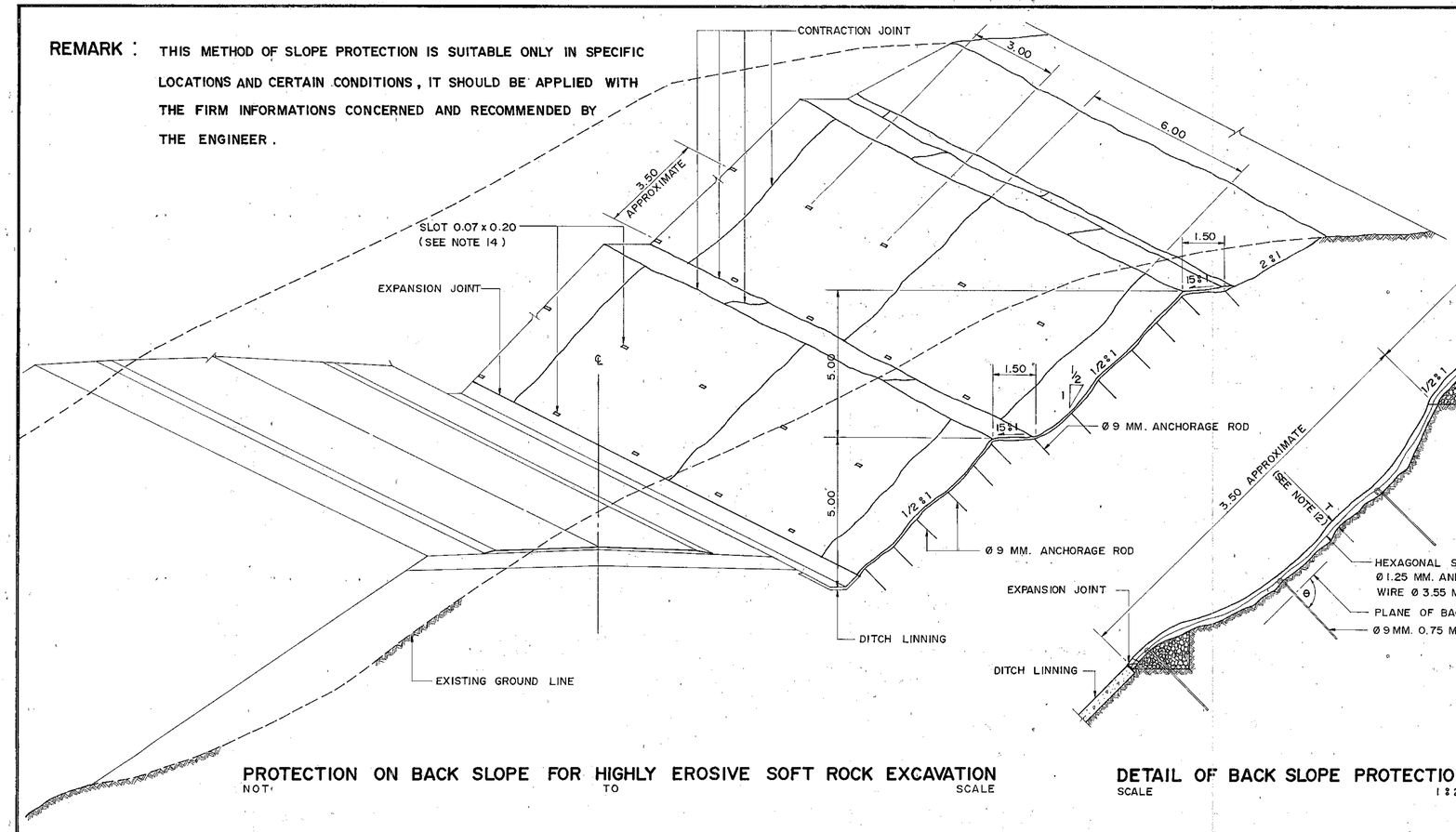


## PROTECTION ON BACK SLOPE FOR HIGHLY EROSIVE SOFT ROCK EXCAVATION
NOT TO SCALE

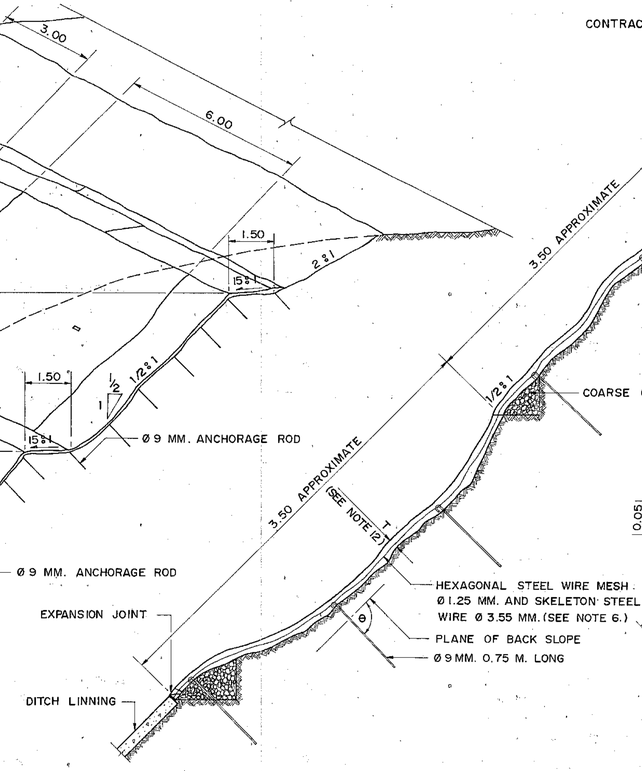


## DETAIL OF BACK SLOPE PROTECTION
SCALE 1 : 25

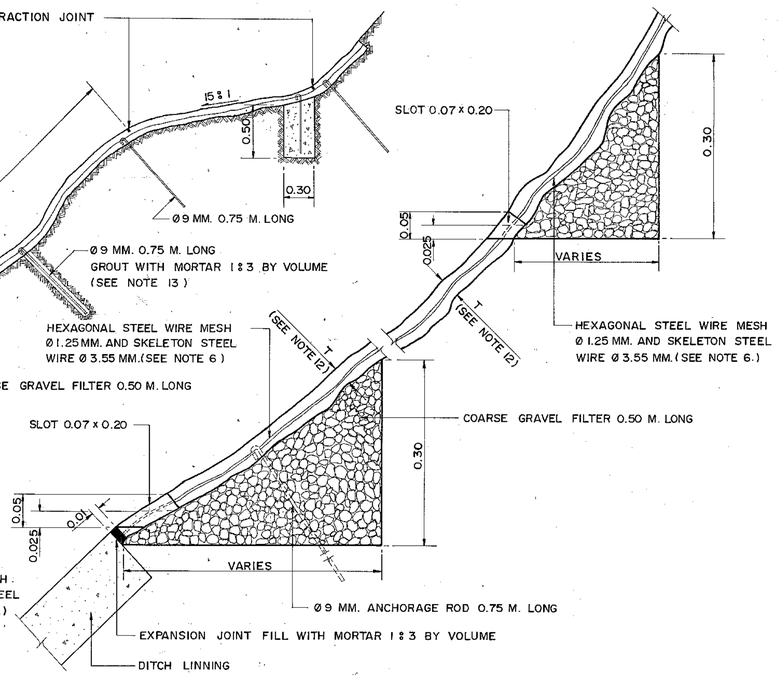


## DETAIL OF COARSE GRAVEL FILTER FOR AREA OF SEEPAGE
SCALE 1 : 5

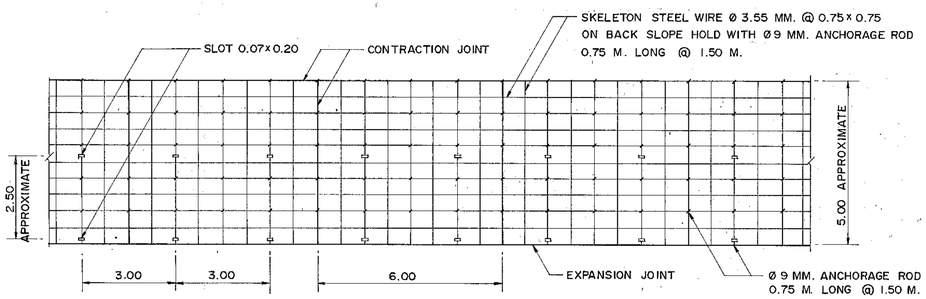


## PLAN OF BACK SLOPE PROTECTION
SCALE 1 : 100

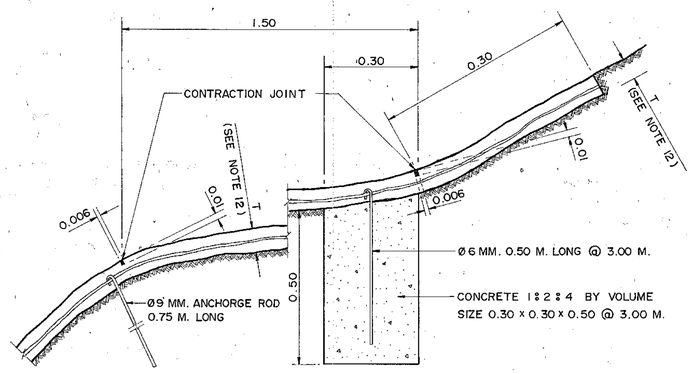


## DETAIL OF ANCHORAGE ROD
SCALE 1 : 5

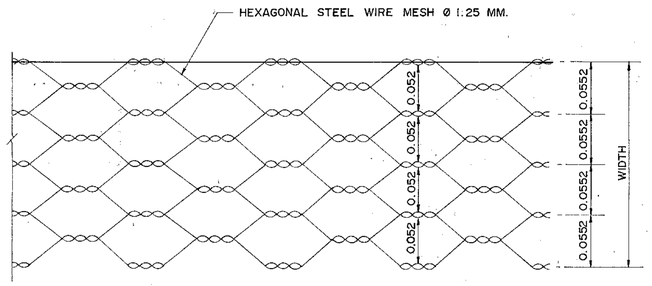


## DETAIL OF HEXAGONAL STEEL WIRE MESH
NOT TO SCALE

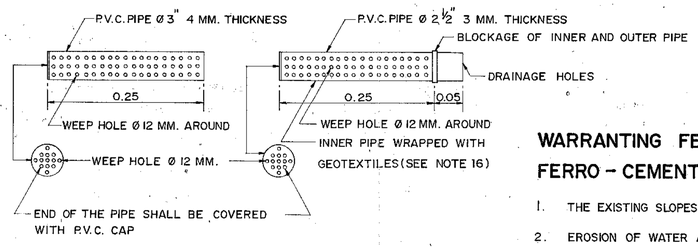


OUTER PERFORATED PIPE INNER PERFORATED PIPE

## DETAIL OF PERFORATED PIPE FOR DRAINAGE
NOT TO SCALE

## NOTES :

1. ALL DIMENSION ARE IN METERS UNLESS OTHERWISE INDICATED.
2. THE FERRO - CEMENT BACK SLOPE PROTECTION AS SHOWN ON THIS DRAWING SHALL APPLY FOR HIGHLY EROSIVE SOFT ROCK BACK SLOPE ONLY.
3. PRIOR TO CONSTRUCTION, THE BACK SLOPE SHALL BE FURNISHED AND WELL COMPACTED TO THE SPECIFIED SLOPE.
4. THE MORTAR PROPORTION SHALL BE CEMENT : SAND RATIO 1 : 1.75 BY WEIGHT AND W/C RATIO = 0.40
5. CEMENT USED SHALL CONFORM TO TIS. 80.
6. HEXAGONAL STEEL WIRE MESH SHALL CONFORM TO TIS 208 TYPE "A". THE SIZE OF MESH IS 52 MM. AND PITCH LENGTH IS 55.2 MM. 50x50 MM. SQUARE WELDED WIRE FRABRIC OF 2 MM. DIAMETER WIRE SHALL BE USED INSTEAD OF HEXAGONAL STEEL WIRE MESH, PROVIDED THAT THE STEEL WIRE SHALL CONFORM TO TIS 194. RUSTY WIRE SHALL NOT BE USED.
7. SKELETON STEEL WIRE (FOR HEXAGONAL STEEL WIRE MESH ONLY) SHALL CONFORM TO TIS 194.
8. ANCHORAGE ROD SHALL CONFORM TO TIS 20 GRADE SR 24.
9. LAPPING OF HEXAGONAL STEEL WIRE MESH SHALL NOT BE LESS THAN 5 AND 10 CM. FOR NARROW SIDE AND LONG SIDE RESPECTIVETY, AND TIED WITH STEEL WIRE AT EVERY 10 CM.
10. CONTRACTION JOINT AND EXPANSION JOINT SHALL BE SEALED WITH MORTAR 1 : 3 BY VOLUME.
11. SIZE OF COARSE GRAVEL FILTER SHALL BE BETWEEN 3/8" AND 2"
12. THE THICKNESS (T) OF FERRO - CEMENT SHALL BE VARIED FROM 3 TO 5 CM. DEPENDING ON SMOOTHNESS OF BACK SLOPE AREA.
13. IF SOIL CONDITION ON BACK SLOPE IS GRANULAR SOIL, THE ANCHORAGE ROD SHALL BE GROUTED WITH MORTAR (1 : 3 BY VOLUME) 5 CM. WIDE.
14. AS DIRECTED BY THE ENGINEER PERFORATED PIPE SHALL BE SUBSTITUTED FOR DRAINAGE SLOT IN AREA WHERE SEEPAGE FLOW IS HIGH.
15. BY THE APPROVAL OF THE ENGINEER, THE CONTRACTOR MAY USE THE SHOTCRETE SYSTEM IN APPLYING MORTAR.
16. GEOTEXTILE SHALL BE NONWOVENS TYPE, WEIGHT 140 G./M.$^2$(MIN.) SHALL CONFORM TO ASTM. 3776
17. IF NECESSARY THE SLOPE MAY BE SHAPED TO BE STEPS WITH 1.00 METER WIDE FOR MAINTENANCE PURPOSE.
18. THE BOUNDARY OF FERRO-CEMENT CONSTRUCTION SHALL BE AT THE BEGINNING AND END OF EROSION AND AT THE BEGINNING, FERRO - CEMENT SHALL BE CONSTRUCTED AT THE SUITABLE DISTANCE PRIOR TO THE EROSION POINT.

## WARRANTING FEATURES FOR FERRO - CEMENT CONSTRUCTION

1. THE EXISTING SLOPES MUST BE STABLE.
2. EROSION OF WATER APPEARS BUT NOT SLIDE.
3. NOT RECOMMENDED FOR HIGHWAY LEADING TO PLACES TO VISIT OR VIEWING POINTS E.G. KHAO KHO, DOI TUNG.

# KINGDOM OF THAILAND
## MINISTRY OF TRANSPORT AND COMMUNICATIONS
## DEPARTMENT OF HIGHWAYS

STANDARD DRAWING

FERRO-CEMENT BACK SLOPE PROTECTION

| | | |
|---|---|---|
| DESIGNED : D.O.H. & CONSULTANTS | CHECKED : | DATE JULY 1994 |
| SUBMITTED : P. Burnagrapa (DIRECTOR OF LOCATION & DESIGN DIVISION) | | SCALE AS SHOWN |
| APPROVED : (DIRECTOR GENERAL) | | DWG. NO. SP-201 |
| | | SHEET NO. 61 |

## REMARK :

THIS METHOD OF SLOPE PROTECTION IS SUITABLE ONLY IN SPECIFIC LOCATIONS AND CERTAIN CONDITIONS, IT SHOULD BE APPLIED WITH THE FIRM INFORMATIONS CONCERNED AND RECOMMENDED BY THE ENGINEER.

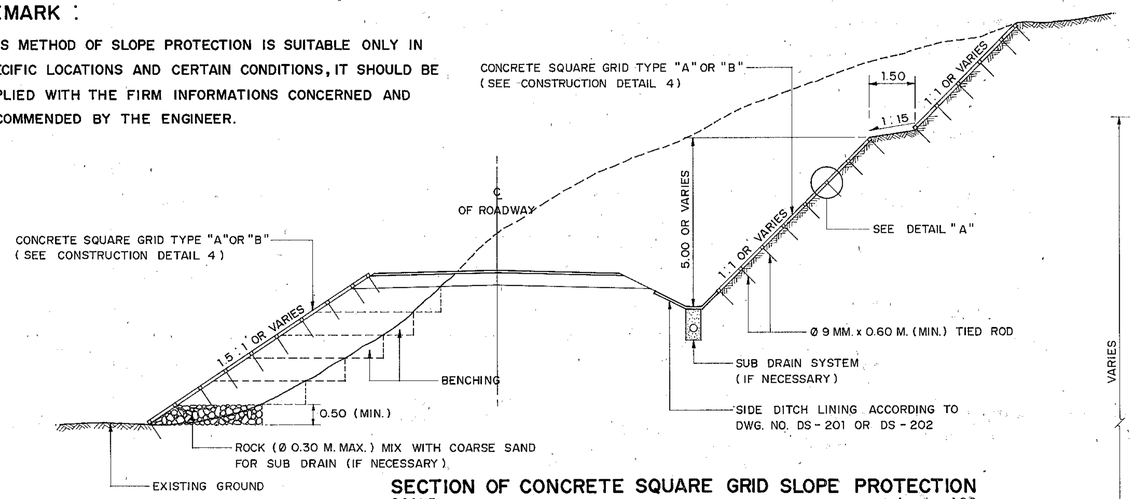


### SECTION OF CONCRETE SQUARE GRID SLOPE PROTECTION

SCALE 1 : 100

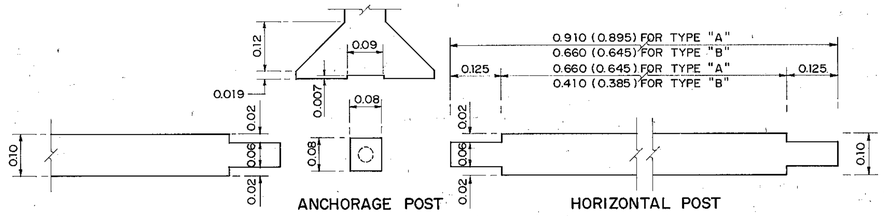


ANCHORAGE POST HORIZONTAL POST

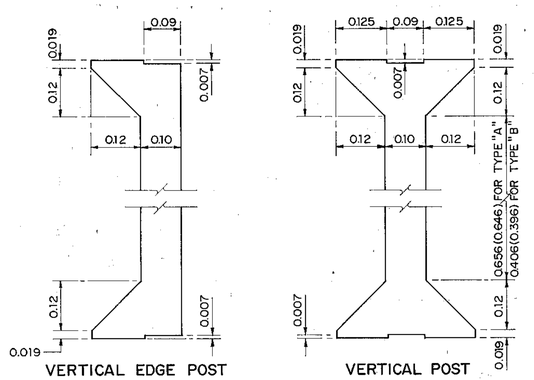


VERTICAL EDGE POST VERTICAL POST

### MEMBER DETAILS

SCALE 1 : 7.5

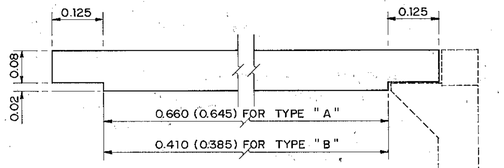


THE TOP HORIZONTAL (OR BOTTOM) EDGE POST

REMARK : ANY NUMBERS IN (_____) INDICATE THE PRECAST MEMBERS WITH CLEARANCE

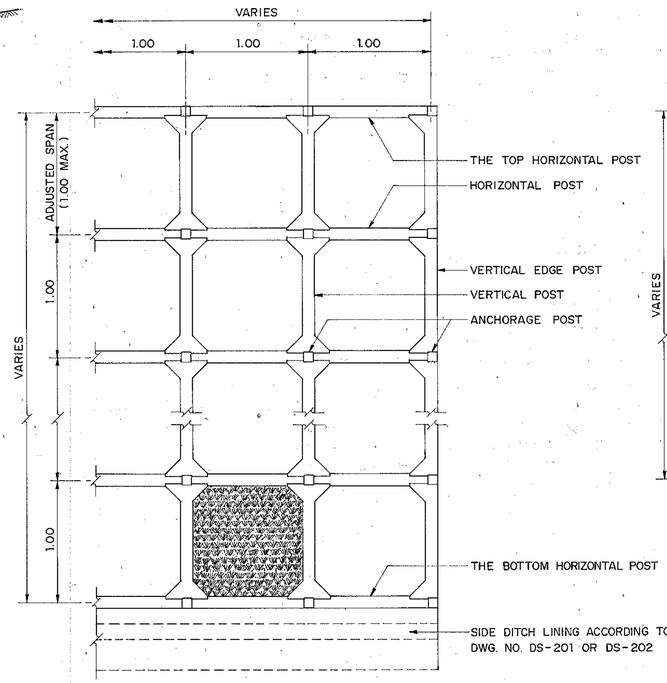


### PLAN OF CONCRETE SQUARE GRID (SIZE 1.00 x 1.00 M.) TYPE "A"

SCALE 1 : 25

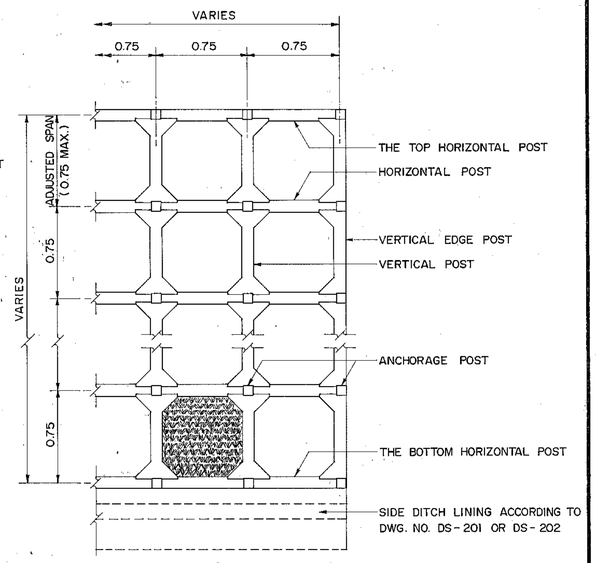


### PLAN OF CONCRETE SQUARE GRID (SIZE 0.75 x 0.75 M.) TYPE "B"

SCALE 1 : 25

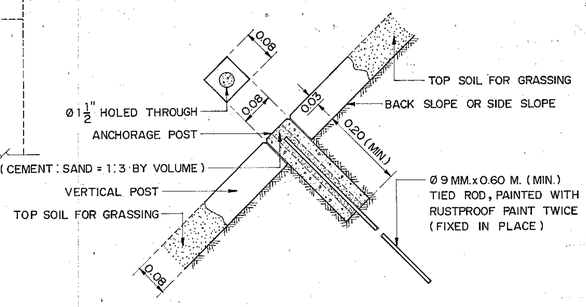


### DETAIL "A" ANCHORAGE POST & TIED ROD

SCALE 1 : 7.5

## CONSTRUCTION DETAILS

1. CONCRETE SQUARE GRID USED HERE ARE THOSE OF PRECAST MEMBERS EXCEPT FOR THE ANCHORAGE POST WHICH CAN BE CASTED IN-PLACE. THE PROPORTION OF THE CONCRETE MIXTURE IS 1 : 2 : 4 BY VOLUME (WITH CRUSHED ROCK OF 1" MAXIMUM).
2. THE PRECAST MEMBERS MENTIONED ABOVE MAY BE THE KIND OF PRESTRESSED CONCRETE. NEVERTHELESS IT IS UP TO THE APPROVAL OF THE LOCATION AND DESIGN DIVISION D.O.H.
3. REINFORCING STEEL AND TIED ROD SHALL CONFORM TO TIS. 20 GRADE SR 24.
4. THE CONCRETE SQUARE GRID SLOPE PROTECTION CAN BE BROUGHT TO USE FOR ANY BACK SLOPE AND SIDE SLOPE PROTECTION AS LONG AS THE EXISTING SLOPE STABILITY OF THAT PARTICULAR SOILS CAN BE STABLE. IN THE CASE OF TOO STEEPER SLOPE OR THE TENDENCY OF SOIL'S EROSION, CONCRETE SQUARE GRID TYPE "B" (SIZE 0.75 x 0.75 M.) IS SUGGESTED.
5. AFTER FINISHING THE BACK AND SIDE SLOPES ACCORDING TO PLAN, THE CONSTRUCTION OF CONCRETE SQUARE GRID SHOULD BE PROCEEDED RIGHT AWAY BY WORKING FROM THE BOTTOM UP TO THE NEXT LEVEL. IF A LITTLE EROSION IS SHOWN IN THE BACK OR SIDE SLOPE, IT IS THE ENGINEER'S DIRECTION TO ADAPT OR ADJUST THE SLOPE. THE LENGTH OF ANCHORAGE POST OR TIED ROD SHALL BE ADJUSTED TO FIELD CONDITION. THE TIED ROD CAN BE LONGER IN RICH SOIL.
6. 8 CM. THICK OF TOP SOIL IS USED IN CONCRETE SQUARE GRID IF NOTHING ELSE IS STATED. THE SOIL MUST BE WELL MIXED AND COMPACTED WITH ORGANIC FERTILIZER IN THE PROPORTION OF 2 : 1 BY VOLUME.
7. IN THE AREA OF UNDERGROUND WATER SEEPAGE, 1½" - 3" CRUSHED ROCKS CAN BE COMPACTED IN THE CONCRETE SQUARE GRID AS WELL AS TOP SOIL.
8. IN CASE SPECIFIC OF GRASSING IN CONCRETE SQUARE GRID, DWG. NO. SP-203 OR SP-204 WHICH IS FOR GROWING VETIVER GRASS ARE TO BE CONSULTED.
9. ALL DIMENSIONS ARE IN METERS UNLESS OTHERWISE INDICATED.

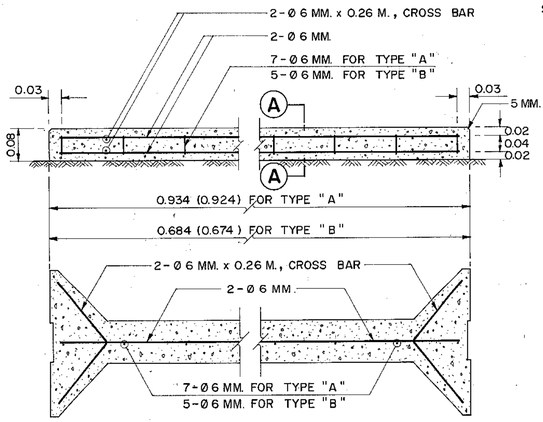


### REINFORCING STEEL OF THE VERTICAL POST

SCALE 1 : 7.5

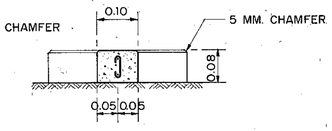


### SECTION (A)-(A)

SCALE 1 : 7.5

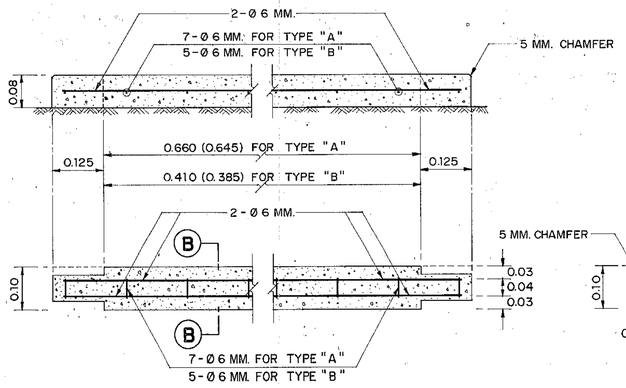


### REINFORCING STEEL OF THE HORIZONTAL POST

SCALE 1 : 7.5

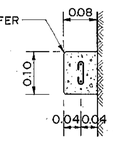


### SECTION (B)-(B)

SCALE 1 : 7.5

# KINGDOM OF THAILAND
## MINISTRY OF TRANSPORT AND COMMUNICATIONS
## DEPARTMENT OF HIGHWAYS

STANDARD DRAWING

CONCRETE SQUARE GRID SLOPE PROTECTION

| | | |
|---|---|---|
| DESIGNED : D.O.H. & CONSULTANTS | CHECKED : | DATE JULY 1994 |
| SUBMITTED : (DIRECTOR OF LOCATION & DESIGN DIVISION) | | SCALE AS SHOWN |
| | | DWG. NO. SP-202 |
| APPROVED : FOR (DIRECTOR GENERAL) | | SHEET NO. 62 |

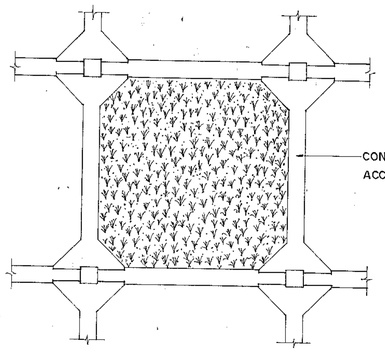


**METHOD 1 GRASSING BY NO COVER**
SCALE 1 : 15

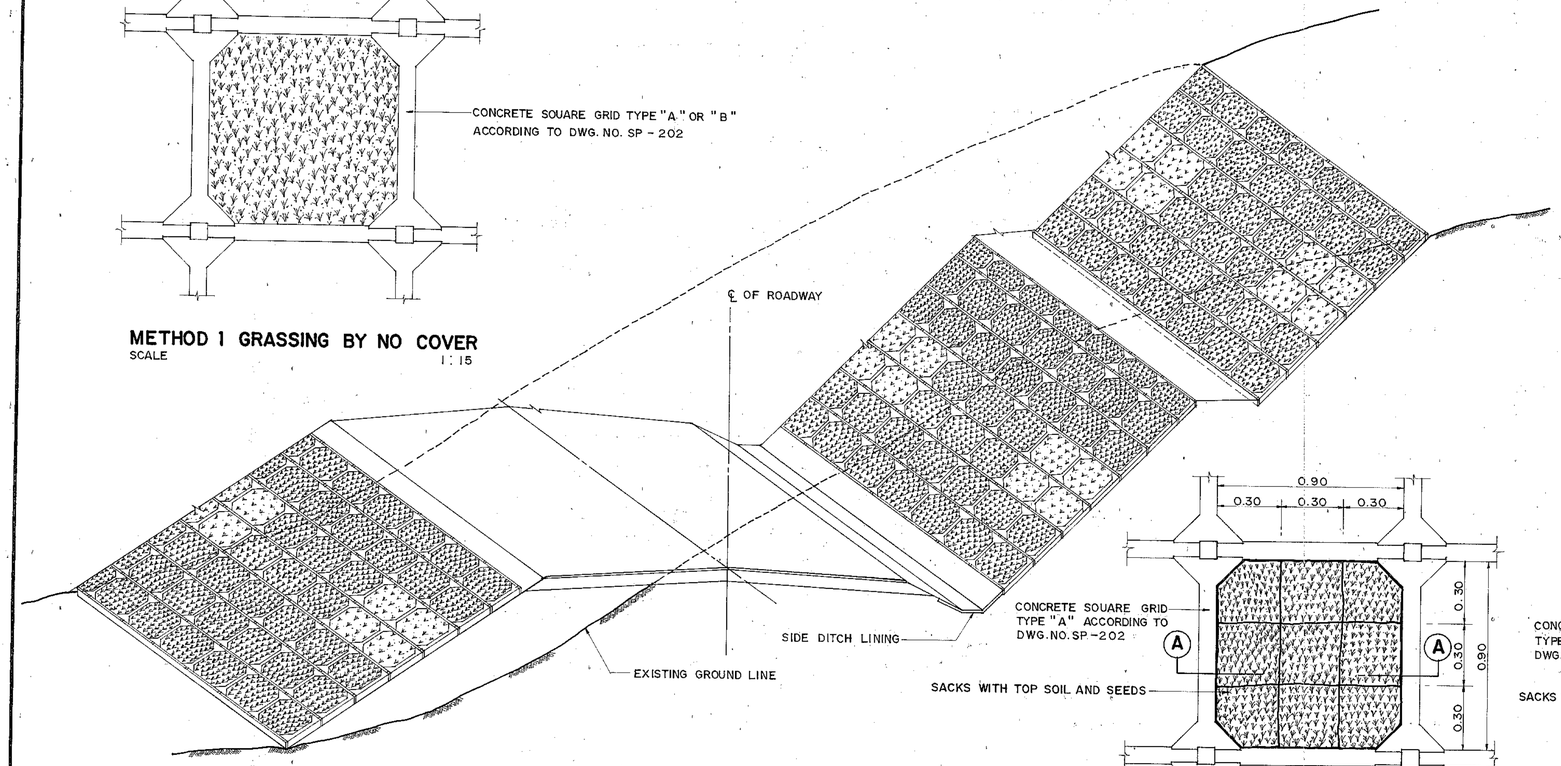


**GRASSING IN CONCRETE SQUARE GRID SLOPE PROTECTION**
SCALE 1 : 15

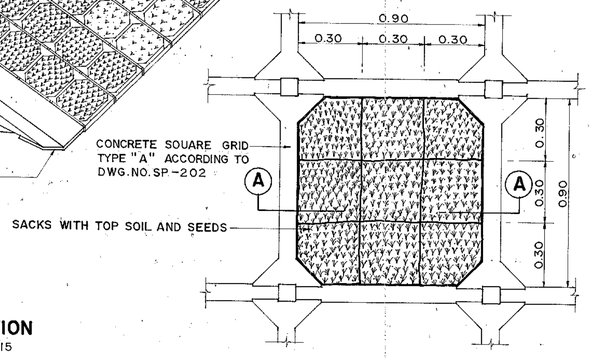


FOR CONCRETE SQUARE GRID TYPE "A"

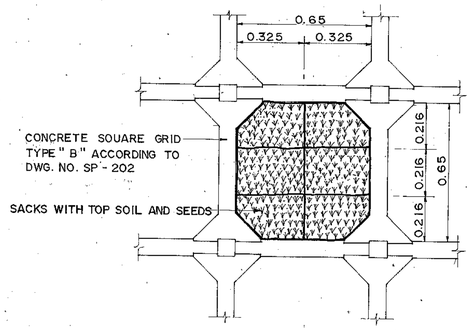


FOR CONCRETE SQUARE GRID TYPE "B"

**METHOD 2 GRASSING BY SACKS WITH TOP SOIL AND SEEDS**
SCALE 1 : 15

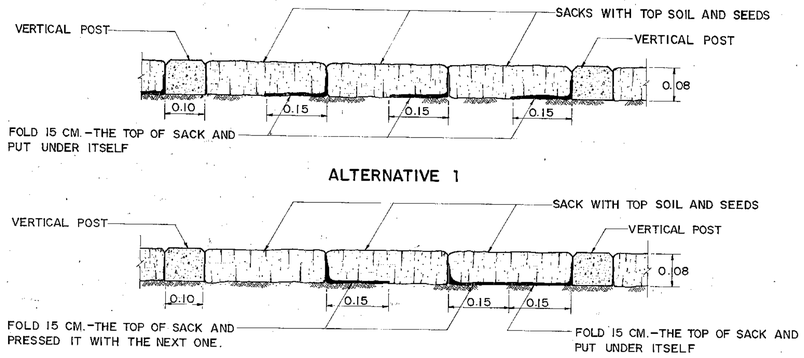


**SECTION (A)-(A) ARRANGEMENT OF SACKS**
SCALE 1 : 7.5

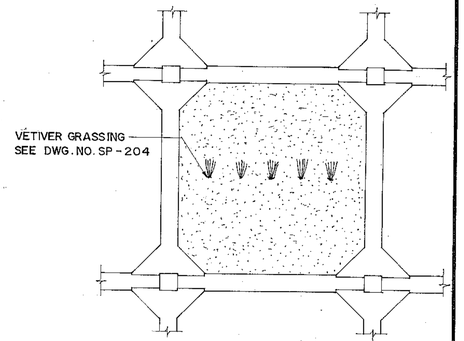


**METHOD 3 VETIVER GRASSING IN CONCRETE SQUARE GRID TYPE "A"**
SCALE 1 : 15

## CONSTRUCTION DETAILS

1. PERIOD FOR GRASSING : AFTER THE CONSTRUCTION OF CONCRETE SQUARE GRID IS FINISHED, GRASSING SHOULD BE QUICKLY PROCEEDED ACCORDING TO CERTAIN GRASSING METHODS AND SUITABLE PERIOD WHICH IS THE TIME OF 1-2 WEEKS BEFORE RAINY SEASON.
2. TOP SOIL : TOP SOIL IS COMPOSED OF RICH SOIL ( NO STONES OR EXISTING BUILDING MATERIALS ) AND GOOD ORGANIC FERTILIZERS SUCH AS BKK.2 (BANGKOK 2) ORGANIC FERTILIZER OR DRY COW MANURE. THE PROPORTION IS 2 : 1 BY VOLUME WITH ENOUGH MOISTURE FOR GRASS GROWING.
3. GRASSING METHOD 1 ( NO COVER ) : THERE ARE 3 WAYS - SEEDING, NODING, BULBING, AS FOLLOW :
   - 3.1 SEEDING
     - 3.1.1 PUT 6-7 CM. THICK OF TOP SOIL IN THE CONCRETE SQUARE GRID AND WELL COMPACTED.
     - 3.1.2 SCATTER THE SELECTED SEEDS ACCORDING TO ITEM 6 INTO THE SQUARE GRID.
     - 3.1.3 FILL 1-2 CM. OF TOP SOIL OVER THE SEEDS AND WELL COMPACTED IT, MAKING EQUAL THICK TO CONCRETE SQUARE GRID (8 CM.).
   - 3.2 NODING
     - 3.2.1 FOLLOW THE STEP 3.1.1 EXCEPT FOR THE THICKNESS OF THE TOP SOIL - 8 CM.
     - 3.2.2 USE THE WELL SELECTED AND PREPARED GRASS NODES ACCORDING TO STATED AMOUNTS IN ITEM 6. SCATTERED PLANTING THE NODES.
   - 3.3 BULBING
     - 3.3.1 FOLLOW THE STEP 3.2.1
     - 3.3.2 USE THE WELL SELECTED AND PREPARED BULBS ACCORDING TO STATED AMOUNTS IN ITEM 6. SCATTERED PLANTING THE NODES.

   THE CONTRACTOR MAY EXPLOIT EITHER WAY OUT OF THOSE THREE WAYS MENTIONED ACCORDING TO THE AREA AND CONVENIENCE OF FINDING THE GRASS. THE WAYS 3.1 AND 3.2 AND 3.3 CAN BE MIXED. IF SO, THE AMOUNTS OF SEEDS, NODES, AND BULBS SHOULD BE REDUCED UP TO THE SUITABILITY AS DIRECTED BY THE ENGINEER AND APPROVED BY LOCATION AND DESIGN DIVISION D.O.H.
4. GRASSING METHOD 2 (WITH SACKS OF TOP SOIL AND SEEDS) : DO AS FOLLOWS.
   - 4.1 PREPARE TOP SOIL AS IN ITEM 2.
   - 4.2 GET CERTAIN SACKS AS FROM ITEM 5.
   - 4.3 MIX THE SELECTED SEEDS AS FROM ITEM 6 WITH TOP SOIL. THE SEEDS USED HERE MUST BE TWICE THE AMOUNTS OF STEPS 3.1, THE AMOUNT OF SOIL IS 17.5 KG./SACK AND 13.75 - KG./SACK FOR CONCRETE SQUARE GRID TYPE "A" AND "B" RESPECTIVELY.
   - 4.4 ARRANGE THE SACKS OF TOP SOIL AND SEEDS IN THE CONCRETE SQUARE GRID BY LAYING THEM DOWN AND FOLDING THE SACKS AS SHOWN IN THE FIGURE. ADJUST THE SACKS AND MAKE THEM LOOK LIKE THE SHOWN FIGURE (THE APPROXIMATE THICKNESS OF 8 CM.) THE QUANTITY OF TOP SOIL IN THE SACKS CAN BE ADJUSTED SO THAT THE SACKS CAN WELL FIT THE GRID.
5. DETAIL OF SACKS : THE SACKS SHOULD BE AS FOLLOW
   - 5.1 SACKS MADE FROM NATURAL FIBRE : THE SACKS SHOULD HAVE THEIR NETS THAT ARE NOT TOO LOOSE OR TOO TIGHT. THEY SHOULD BE STRONG ENOUGH SO THAT THEY WILL NOT BE BROKEN WHILE BEING REMOVED. ALSO THEY SHOULD DECAY IN THE COURSE OF ONE YEAR. THUS THE JUTE BAGS ARE INTRODUCED AS THEIR 1 INCH WOVEN THREADS CONTAIN 7.5 WARP STRINGS AND 12 WEFT STRINGS ( ± 0.5 STRING DEVIATION ). THE SIZE OF SACK FOR CONCRETE SQUARE GRID TYPE "A" IS 39 x 50 CM. ( ± 1 CM. DEVIATION ) AND THE SIZE FOR THE TYPE "B" IS 30.5 x 52 CM. ( ± 1 CM. DEVIATION ).
   - 5.2 SACKS MADE FROM SYNTHETIC FIBERS : THE SACKS MUST POSSES THE QUALITIES ACCORDING TO ITEM 5.1 AND MUST COMPLETELY DECAY WITHIN ONE YEAR. YET THE APPROVAL OF THE LOCATION AND DESIGN DIVISION D.O.H.
6. KINDS OF GRASS AND WAYS OF REPRODUCING :
   - 6.1 GENERAL SPECIFICATION : USE ANY OF LOCAL KINDS OR ANY THAT CAN BE FOUND IN THAILAND AS THEY LIVE LONG AND CAN HOLD VERY WELL TO THE GROUND. THEY ALSO SURVIVE IN ANY BAD STATE OF SOIL AND ENVIRONMENT. INFORMATION IS AS FOLLOW :

| NO. | COMMON NAMES | SCIENTIFIC NAMES | WAYS OF REPRODUCING | SEEDS' QUALITY | |
|---|---|---|---|---|---|
| | | | | PURITY NOT LESS THAN (%) | RATE OF GROWTH NOT LESS THAN (%) |
| 1 | หญ้ารูซี่ | BRACHIARIA RUZIZIENSIS | SEEDS | 70 | 30 |
| 2 | หญ้าพลิแคททูลั่ม | PASPALUM PLICATULUM | SEEDS | 60 | 40 |
| 3 | หญ้าแพรก | CYNODON DACTYLON | SEEDS OR NODES | 40 | 30 |
| 4 | หญ้าสตาร์ | CYNODON PLECTOSTACHYUS | NODES OR BULBS | | |
| 5 | หญ้าซิกแนลเลี้ยย | BRACHIARIA HUMIDICOLA | NODES OR BULBS | | |
| 6 | หญ้าบาเฮ้ย | PASPALUM NOTATUM | OFFSHOOTS OR SEEDS | | |
| 7 | หญ้าตีนกา | ELEUCINE INDICA | SEEDS | 40 | 25 |
| | พืชตระกูลถั่ว | | | | |
| 8 | ถั่วลาย | CENTROSEMA PUBESCENS | SEEDS | 90 | 50 |
| 9 | ถั่วอามาต้า | STYLOSANTHES HAMATA | SEEDS | 70 | 25 |
| 10 | ถั่วลิราโต | MACROPTILIUM ATROPURPUREUM | SEEDS | 60 | 25 |

   AND SEEDS' MOISTURE IS NOT MORE THAN 10 %
   - 6.2 SEEDING : QUALITY OF SEEDS SHOULD CONFORM TO ITEM 6.1 (10-15 GM./M.$^2$)
   - 6.3 NODING : USE RATHER OLD BUT STRONG STEMS WHICH HAVE AT LEAST 4 NODES EACH (100-120 STEMS/M.$^2$)
   - 6.4 BULBING : USE STRONG BULBS (120-140 BULBS/M.$^2$)

   THE CONTRACTOR CAN USE ONLY ONE KIND OF GRASS OR MANY DIFFERENT KINDS, BUT THE NUMBERS OF EACH KIND NEED TO BE ADJUSTED ACCORDING TO SUITABLE PROPORTION. GENERALLY, BEANS WITH THE RATE OF GROWTH 10-15 STEMS/M.$^2$ ARE USED TO MIX WITH OTHER GRASS. ANY OTHER KINDS OF GRASS ( NOT MENTIONED IN THE TABLE ABOVE ) CAN ALSO BE USED AS DIRECTED BY THE ENGINEER AND APPROVED BY THE LOCATION AND DESIGN DIVISION D.O.H.
7. GRASS CARING : THE CONTRACTOR MUST TAKE GOOD CARE OF THE GRASS SO THAT THEY GROW WELL WITHIN 3 MONTHS, THERE SHOULD BE COVERED NOT LESS THAN 75 % OF THE GRID AREA ANYWHERE. THE GROWTH PERCENTAGE LESS THAN THIS THE CONTRACTOR MUST MANAGE TO REACH THE PERCENT OTHERWISE. THE AGRICULTURAL OPERATION TO INCREASE GROWTH OF GRASS COULD BE DONE.
8. THIS DRAWING CAN BE USED FOR GRASSING IN CONCRETE GRID BEAM ( ACCORDING TO DWG. NO. SP-301 ).
9. ALL DIMENSION ARE IN METERS UNLESS OTHERWISE INDICATED.

## REMARK :

THIS METHOD OF SLOPE PROTECTION IS SUITABLE ONLY IN SPECIFIC LOCATIONS AND CERTAIN CONDITIONS, IT SHOULD BE APPLIED WITH THE FIRM INFORMATIONS CONCERNED AND RECOMMENDED BY THE ENGINEER.

**KINGDOM OF THAILAND**
**MINISTRY OF TRANSPORT AND COMMUNICATIONS**
**DEPARTMENT OF HIGHWAYS**

STANDARD DRAWING

GRASSING IN CONCRETE SQUARE GRID AND GRID BEAM

| | | |
|---|---|---|
| DESIGNED : D.O.H. & CONSULTANTS | CHECKED : | DATE JULY 1994 |
| SUBMITTED : (DIRECTOR OF LOCATION & DESIGN DIVISION) | | SCALE AS SHOWN |
| APPROVED : FOR (DIRECTOR GENERAL) | | DWG. NO. SP-203 |
| | | SHEET NO. 63 |

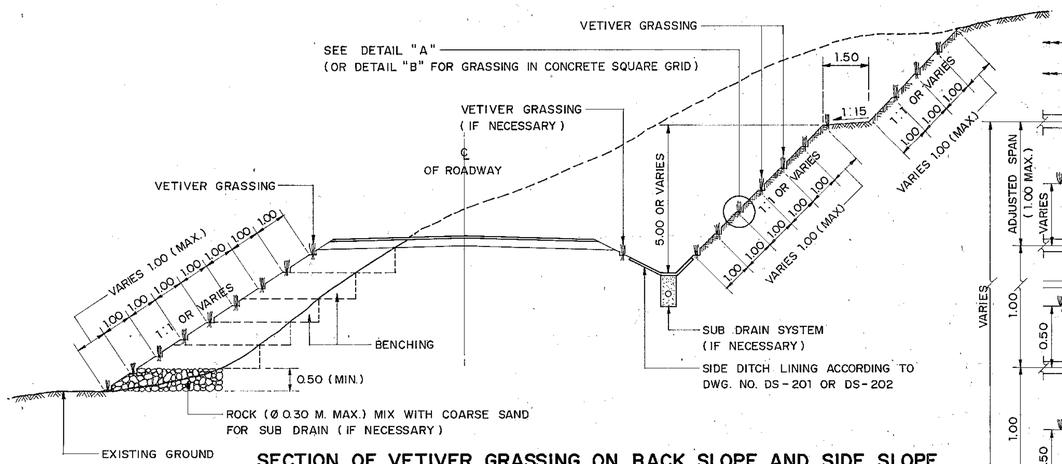


## SECTION OF VETIVER GRASSING ON BACK SLOPE AND SIDE SLOPE

SCALE 1 : 100

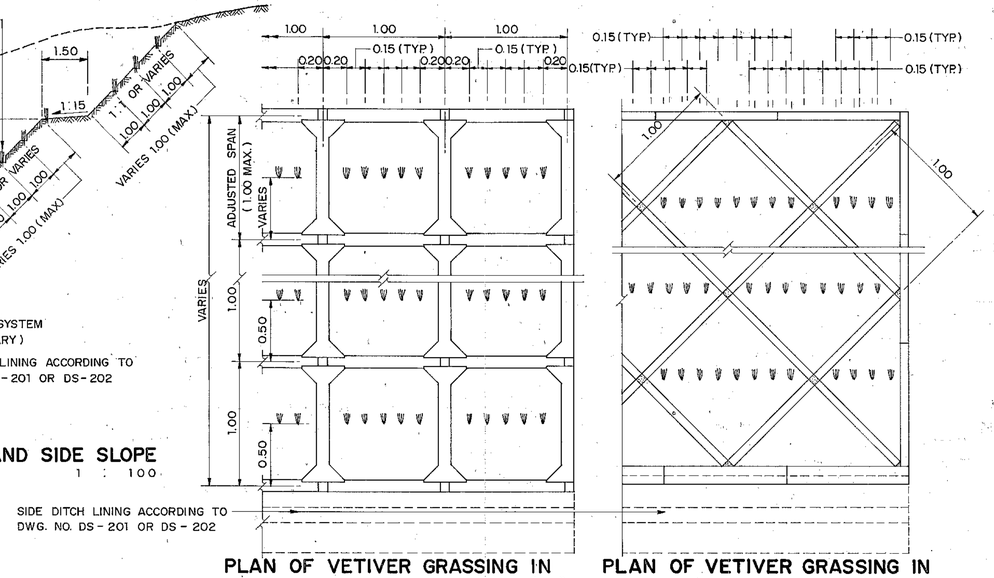


## PLAN OF VETIVER GRASSING IN CONCRETE SQUARE GRID TYPE "A"

SCALE 1 : 25

## PLAN OF VETIVER GRASSING IN CONCRETE GRID BEAM

SCALE 1 : 25

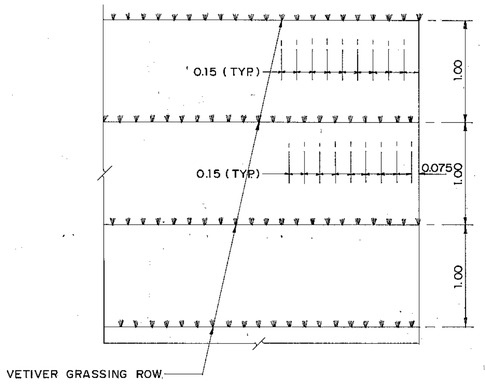


## PLAN OF VETIVER GRASSING ROW

SCALE 1 : 30

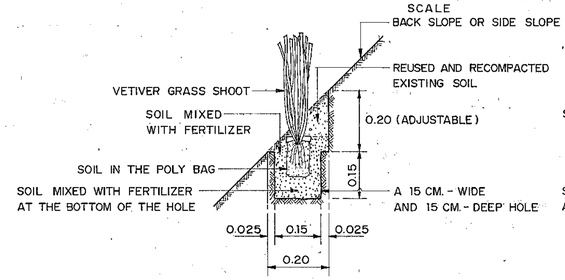


## DETAIL "A"

SCALE 1 : 10

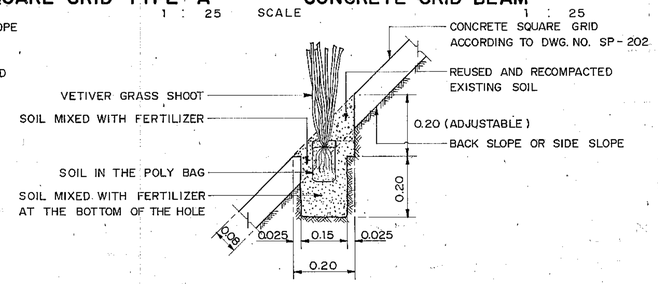


## DETAIL "B"

SCALE 1 : 10

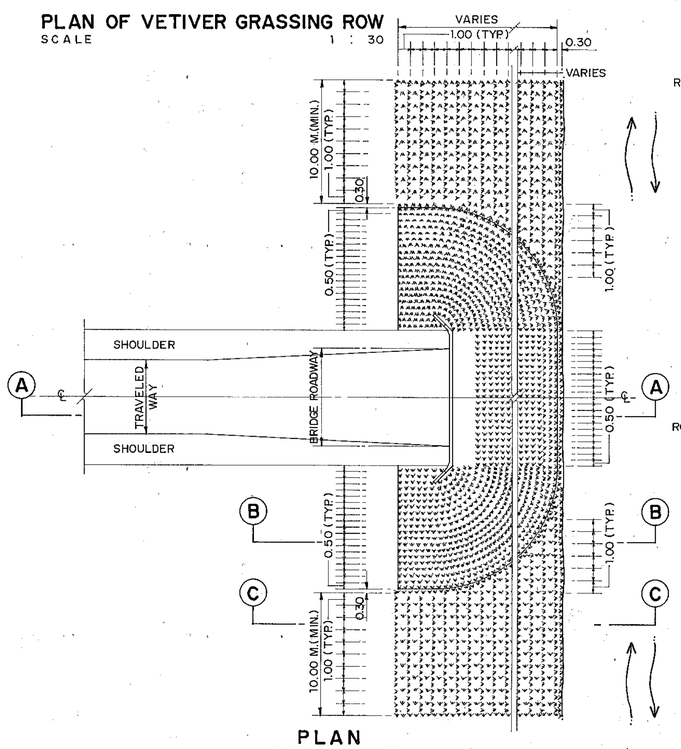


## PLAN

SCALE 1 : 250

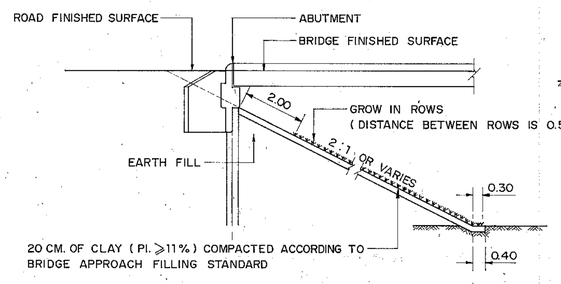


## SECTION (A)-(A)

SCALE 1 : 100

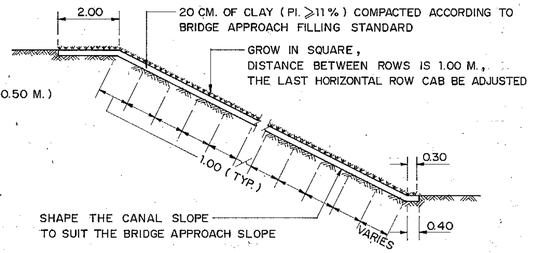


## SECTION (C)-(C)

SCALE 1 : 100

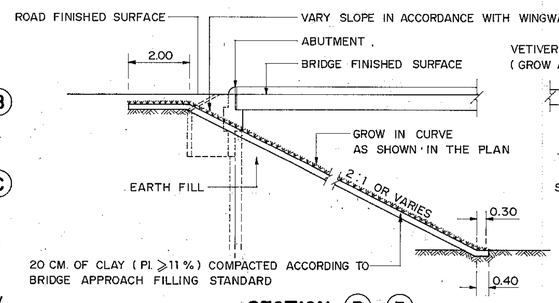


## SECTION (B)-(B)

SCALE 1 : 100

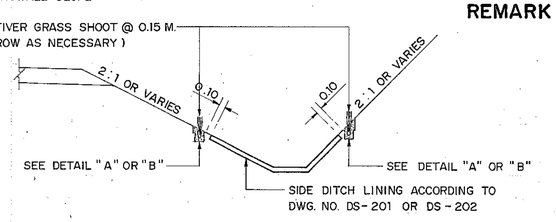


## VETIVER GRASSING AT SIDE DITCH LINING

SCALE 1 : 50

## VETIVER GRASSING AT BRIDGE SLOPE PROTECTION

## CONSTRUCTION DETAILS

1. THE VETIVER GRASS SHOOTS : VETIVER (VETIVERIA ZIZANIOIDES NASH) SHALL BE LOCAL KINDS OR ANY OTHER APPROPRIATE ONES AS APPROVED BY THE LOCATION AND DESIGN DIVISION D.O.H. VETIVER SHOOTS SHOULD BE RESTED IN A POLY BAG WHICH HAS DIAMETER OF 3 INCHES AND THE LENGTH OF 7 INCHES (SIDE-FOLDED) BEFORE PLANTING. EACH BAG WHICH CONTAINS SOIL AND FERTILIZER IS TO SERVE 1-2 VETIVER SHOOTS. THE SHOOTS WILL BE RESTED IN THE BAGS FOR $1\frac{1}{2}$ - $2\frac{1}{2}$ MONTHS BEFORE BEING TAKEN TO THE PREPARED SOIL.
2. HOLE DIGGING AND GROUND PREPARATION : AFTER THE WORKS FOR BACK SLOPE, SIDE SLOPE, BRIDGE APPROACH SLOPE, AND BANK SLOPE ARE FINISHED ACCORDING TO THE CONSTRUCTION PLAN, GROUND PREPARATION FOR VETIVER PLANTING SHOULD BE STARTED BY DIGGING A HOLE WHICH IS 15 CM. WIDE AND 15-20 CM. DEEP. A GROOVE ALONG THE ROW OF VETIVER SHOULD BE MADE AND THE BOTTOM OF THE GROOVE SHOULD BE COVERED WITH 8-10 CM. OF EXISTING SOIL MIXED WITH SOME FERTILIZER. THE FERTILIZER MUST HAVE THE SAME QUALITY AS BKK.2 (BANGKOK 2) FERTILIZER OR DECAYED MANURE. THE PROPORTION OF SOIL AND FERTILIZER IS 1 : 1 BY VOLUME AND THE SOIL AND THE FERTILIZER SHOULD BE WELL MIXED.
3. PLANTING : THE SPACE BETWEEN ROWS IS AS SHOWN IN THE PLAN. THE DISTANCE BETWEEN TWO SHOOTS IS 15 CM. TRIM AND LEAVE THE LEAVES OF THE SHOOTS FOR 20 CM. BEFORE PLANTING. CUT OFF THE BOTTOM PART OF THE BAG AND LET 10 CM. OF THE ROOT BE SHOWN. TAKE OFF THE BAG AND PUT THE VETIVER SHOOT ON THE PREPARED HOLE. FILL THE HOLE WITH THE PREPARED SOIL AS SHOWN AT DETAIL "A" AND "B". AFTER 15-20 DAYS OF PLANTING, POUR HALF A TEA-SPOON OF AMMONIAM SULPHATE FERTILIZER (21:0:0) OR ONE-FOURTH OF TEA-SPOON OF UREA FERTILIZER (46:0:0) OVER EACH HOLE AND OVER EACH SPACE BETWEEN HOLES. FILL THE HOLE WITH SOME EXISTING SOIL AND COMPACT TO MEET EXISTING SLOPE.
4. PERIOD FOR PLANTING : THE SUITABLE PERIOD SHALL BE 1-3 WEEKS BEFORE RAINY SEASON. PLANTING FOR THE BRIDGE APPROACH SLOPE PROTECTION SHOULD BE DONE DURING THE LOWER WATER LEVEL.
5. PLANT CARING : THE RATE OF SURVIVAL OF VETIVER SHOULD BE NOT LESS THAN 95 % AFTER 2 MONTHS OF PLANTING. IF LESS, THE CONTRACTOR HAS TO REDO THE PLANTING WITHIN 15 DAYS. THE NEW PLANTING WILL BE RECHECKED AFTER ANOTHER 2 MONTHS. THE INEVITABLE DESTRUCTION OF THE SHOOTS BY NATURE AT THE BOTTOM OF BRIDGE APPROACH IS AN EXCEPTION.
6. THE SHOOTS : OTHER THAN THE LOCAL SHOOTS, THE CONTRACTOR MAY USE ANY SHOOTS REPRODUCED THROUGH VARIOUS WAYS, SUCH AS BY TISSUE CULTURE BUT THE QUALITY OF THE SHOOTS NEED TO BE APPROVED BY THE LOCATION AND DESIGN DIVISION D.O.H.
7. LEAF TRIMMING AND FERTILIZING : THE VETIVER WILL BE TRIMMED AND FERTILIZED EVERY 4 MONTHS IN THE FIRST YEAR OF VETIVER GROWTH AND EVERY 6 MONTHS IN THE CONSECUTIVE YEARS. THE TRIMMING SHOULD LEAVE THE HEIGHT OF THE PLANT FOR 30-50 CM. AFTER THE SECOND LEAF TRIMMING, NPK FERTILIZER (15-15-15) SHOULD BE PUT ON THE GROUND IN THE PROPORTION 15 GRAMS PER METER OF VETIVER GRASS ROW.
8. VETIVER GRASSING FOR BANK PROTECTION : VETIVER GRASSING CAN ALSO BE APPLIED TO PROTECT EROSION OF ROADWAY SLOPE ALONG THE RIVER. THE LENGTH OF PLANTING SHOULD BE DEPENDED ON THE NATURE OF THE RIVER CONDITION AND APPROVAL BY THE ENGINEER.
9. ALL DIMENSIONS ARE IN METERS UNLESS OTHERWISE INDICATED.

**REMARK :** THIS METHOD OF SLOPE PROTECTION IS SUITABLE ONLY IN SPECIFIC LOCATIONS AND CERTAIN CONDITIONS, IT SHOULD BE APPLIED WITH THE FIRM INFORMATIONS CONCERNED AND RECOMMENDED BY THE ENGINEER.

# KINGDOM OF THAILAND
MINISTRY OF TRANSPORT AND COMMUNICATIONS
DEPARTMENT OF HIGHWAYS

STANDARD DRAWING

VETIVER GRASSING FOR SLOPE PROTECTION

| | | |
|---|---|---|
| DESIGNED : D.O.H. & CONSULTANTS | CHECKED : | DATE JULY 1994 |
| SUBMITTED : (DIRECTOR OF LOCATION & DESIGN DIVISION) | | SCALE AS SHOWN |
| | | DWG. NO. SP-204 |
| APPROVED : (DIRECTOR GENERAL) | | SHEET NO. 64 |

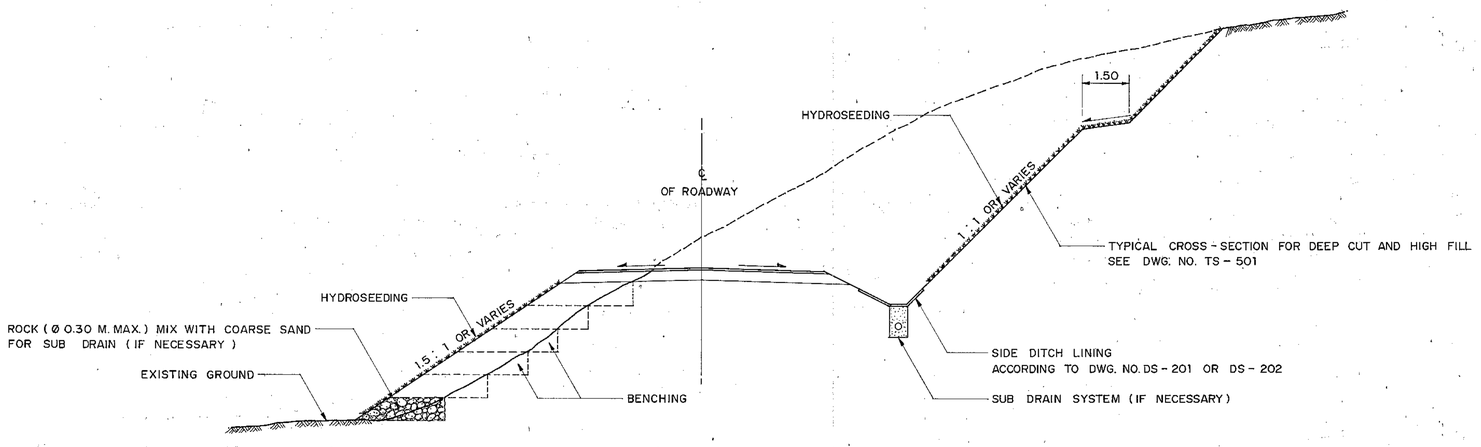


## HYDROSEEDING FOR SLOPE PROTECTION

NOT TO SCALE

## CONSTRUCTION DETAILS

1. AREA PREPARATION

1.1 AFTER THE EARTH WORKS OF CUT AND FILL ARE FINISHED AS PLANNED, HYDROSEEDING SHOULD BE DONE RIGHT AWAY BEFORE THE OCCURRENCE OF SLOPE EROSION.

1.2 IF THE SURFACE OF BACK SLOPE IS TOO HARD, SHAPE IT BY STRIPPING SOME EXISTING SOIL THAT IS COVERING THE SURFACE. THE SHAPING WILL MAKE THE SURFACE SOFT AND SHOULD LEAVE THE 2.5 CM. THICKNESS OF THE SURFACE. THERE SHOULD BE GROOVED WHICH ARE 5 - 7 CM. APART ALONG THE LENGTH OF AREA.

1.3 SHAPING THE SURFACE OF THE SIDE SLOPE IS DONE THE SAME WAY AS IN ITEM 1.2 AND YET AS DIRECTED BY THE ENGINEER.

1.4 IN SOME AREAS THAT ARE COVERED WITH BOULDERS, SOFT ROCK OR ROCK WITH SEEPAGE FLOW OR HAVE RELLS OR GULLIES, THE SOIL SHAPING SHOULD BE DIRECTED BY THE ENGINEER.

2. SUGGESTED GRASS AND QUALITIES OF ITS SEEDS

2.1 IN GENERAL, THE SUGGESTED GRASS IS THAT OF LOCAL KINDS OR ANY KINDS THAT HAVE BEEN WELL GROWN IN THAILAND. THE GRASS USED AS PERMANENT GRASS FOR PREVENTION SOIL EROSION SHOULD BE PERENNIAL GRASS AND HAS STRONG ROOTS SYSTEM THAT CAN FIRMLY HOLD TO THE GROUND AND CAN BEAR ANY BAD STATE OF SOIL. WHILE IN USE, THE GRASS SHOULD BE MIXED WITH BEAR PLANTS WHICH WILL BE A NITROGEN CATCHER OR MIXED WITH SHORT - LIFE GRASS WHICH WILL BE SACRIFY GRASS, AS DIRECTED BY THE ENGINEER.

2.2 SUGGESTED GRASS AND QUALITY OF ITS SEEDS

| NO. | COMMON NAMES | SCIENTIFIC NAMES | SEEDS' QUALITY | | | NOTE |
|---|---|---|---|---|---|---|
| | | | MOISTURE NOT MORE THAN (%) | PURITY NOT LESS THAN (%) | RATE OF GROWTH NOT LESS THAN (%) | |
| 1 | หญ้ารูซี่ | BRACHIARIA RUZIZIENSIS | 10 | 70 | 50 | |
| 2 | หญ้าพลิแคทูลัม | PASPALUM PLICATULUM | 10 | 60 | 40 | |
| 3 | หญ้าแพรก | CYNODON DACTYLON | 10 | 50 | 30 | |
| 4 | หญ้าซิกแนลเลี้อย | BRACHIARIA HUMIDICOLA | 10 | – | – | |
| 5 | หญ้าลดาร์ | CYNODON PLECTOSTACHYUS SPP. | 10 | – | – | |
| 6 | หญ้าบาเฮีย | PASPALUM NOTATUM | 10 | 50 | 30 | |
| 7 | หญ้าหวาย | ERAGROSTIS DIPLACHNOIDES | 10 | 50 | 30 | |
| 8 | หญ้า WEEPING | ERAGROSTIS PARVIFLORA | 10 | 50 | 30 | |
| | LOVE GRASS | ERAGROSTIS CURVULA | | | | |
| 9 | หญ้าตีนกา | ELEUCINE INDICA | 10 | 40 | 25 | |
| 10 | หญ้า RYE | LOLIUM PERENNE | 10 | 50 | 30 | |
| 11 | หญ้า FESCUE | FESTUCA ELATOR | 10 | 50 | 30 | GOOD FOR COLD WEATHER |
| 12 | หญ้า ACACIA | ACACIA SPP. | 10 | 50 | 30 | |
| | พืชตระกูลถั่ว | | | | | |
| 13 | ถั่วลาย | CENTROSEMA PUBESCENS | 10 | 90 | 50 | |
| 14 | ถั่วอามาต้า | STYLOSANTHES HAMATA | 10 | 70 | 30 | |
| 15 | ถั่วซิราโตเร | MACROPTILIUM ATROPURPUREUM | 12 | 90 | 50 | |

ANY OTHER KINDS THAT HAVE THE SAME QUALITIES AS MENTIONED IN ITEM 2.1 CAN ALSO BE USED, YET AS DIRECTED BY THE ENGINEER AND APPROVAL BY THE LOCATION AND DESIGN DIVISION D.O.H.

2.3 TWO KINDS OF GRASS OR MORE AS MENTIONED IN ITEM 2.2 SHOULD BE USED TOGETHER ACCORDING TO THE SITE. THE PROPORTION OF THE GRASS MIXED SHOULD BE 15 GM./M$^2$ AND BEANS WITH RATE OF GROWTH 10 - 15 STEMS / M.$^2$

3. OTHER MATERIALS

3.1 ACID DILUTE : IN GENERAL, THE pH OF SOIL SUITABLE FOR GRASSING IS ABOUT 5 - 8. IF THE SOIL HAS CONCENTRATED ACID, USE THESE CHEMICALS TO DILUTE THE ACID CONDITION OF THE SOIL.

3.1.1 CRUSHED AND BURNED OYSTER SHELL OR

3.1.2 DOLOMITE

THE SUITABLE PROPORTION OF THESE CHEMICALS IS USED TO DILUTE THE ACID CONDITION OF SOIL, TO BE NEUTRAL CONDITION.

3.2 NPK FERTILIZER (15 : 15 : 15) : NOT LESS THAN 30 GM./M.$^2$

3.3 TACKIFIER OR BINDER MATERIALS (TAKEN FROM PLANTS) : WHITE GLUE OR EMULSION PRODUCED FROM PETROLEUM SHOULD NOT BE USED BECAUSE IT HINDERS THE GROWTH OF THE SEEDS. THE TACKIFIER USED SHOULD BE 30 GM. / M$^2$.

3.4 WETTING AGENT : USED TO PREVENT THE CLINGING AMONG THE SEEDS, WITH SUITABLE PROPORTION.

3.5 INDUSTRIAL DETERGENT : USED TO INCREASE K - VALUE ( PERMEABILITY ) OF SOIL. THE APPROPRIATE AMOUNT IS 0.1 - 0.2 GM. / M.$^2$

3.6 MULCH MATERIALS : NOT LESS THAN 200 GM./M.$^2$

4. PUMPING MACHINE

THE PREFERABLE KIND IS THAT OF HIGH PRESSURE MACHINE THAT CAN FORCE THE MIXTURES AS HIGH AS 30 M. AND THAT HAS ITS HEAD THAT CAN SPRAY THE MIXTURES ALL OVER THE PLACE.

5. PERIOD OF TIME

HYDROSEEDING SHOULD BE DONE 2 - 4 WEEKS BEFORE RAINY SEASON.

6. FERTILIZING

10 - 15 GM./M.$^2$ OF UREA FERTILIZER SHOULD BE SPRAYED ON THE AREA ONE MONTH AFTER HYDROSEEDING.

7. 75 % OF GRASS SHOULD GROW AND COVER THE GROUND 2 - 3 MONTHS AFTER HYDROSEEDING, EXCEPT HARD SOIL OR ROCK OR BOULDERS.

8. INVESTIGATION : IF THERE ARE STILL SOME AREAS THAT ARE NOT SUCCESSFULLY DONE ACCORDING TO ITEM 7, THE CONTRACTOR NEEDS TO REDO THE HYDROSEEDING.

9. ANY OTHER OPERATION CONFORMING TO AGRICULTURAL, TO INCREASE EFFICIENCY OF GROWTH, CAN BE DONE.

## REMARK :

**THIS METHOD OF SLOPE PROTECTION IS SUITABLE ONLY IN SPECIFIC LOCATIONS AND CERTAIN CONDITIONS, IT SHOULD BE APPLIED WITH THE FIRM INFORMATIONS CONCERNED AND RECOMMENDED BY THE ENGINEER.**

**KINGDOM OF THAILAND**
**MINISTRY OF TRANSPORT AND COMMUNICATIONS**
**DEPARTMENT OF HIGHWAYS**

STANDARD DRAWING

HYDROSEEDING FOR SLOPE PROTECTION

| | | |
|---|---|---|
| DESIGNED : D.O.H. & CONSULTANTS | CHECKED : | DATE JULY 1994 |
| SUBMITTED : (DIRECTOR OF LOCATION & DESIGN DIVISION) | | SCALE NONE |
| | | DWG. NO. SP-205 |
| APPROVED : (DIRECTOR GENERAL) | | SHEET NO. 65 |

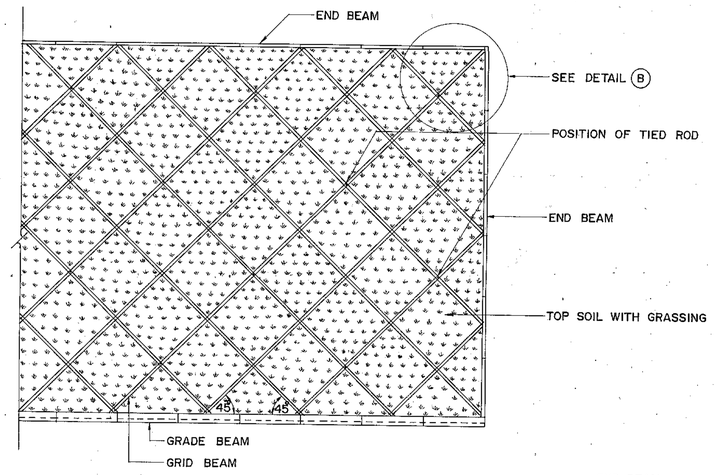


## FRONT ELEVATION
SCALE 1 : 50

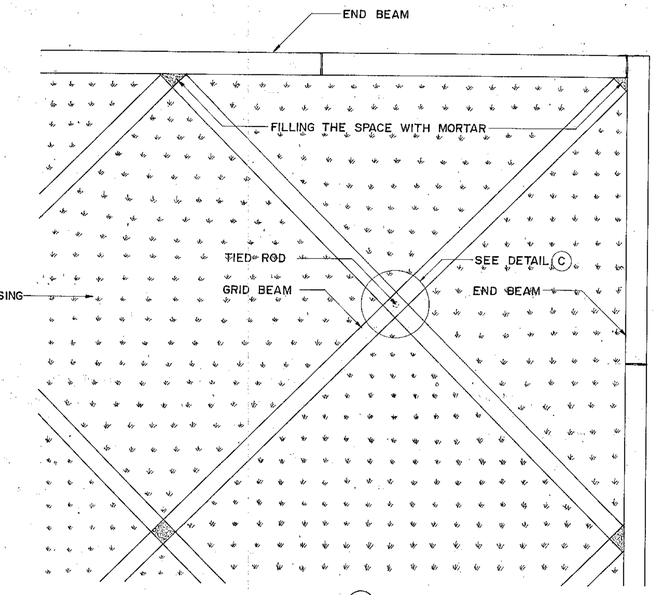


## DETAIL (B)
SCALE 1 : 10

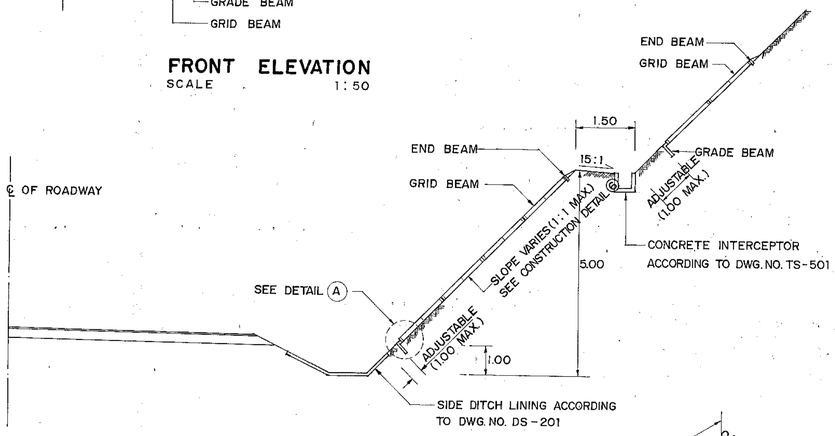


## SIDE ELEVATION
SCALE 1 : 75

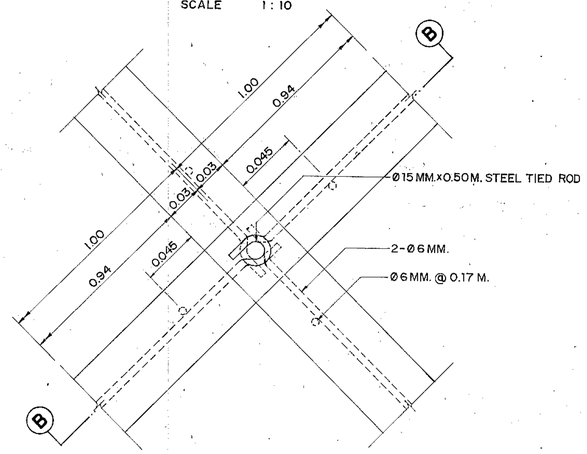


## DETAIL (C)
SCALE 1 : 2.5

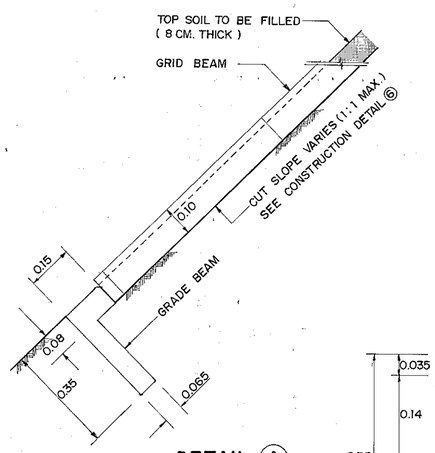


## DETAIL (A)
SCALE 1 : 10

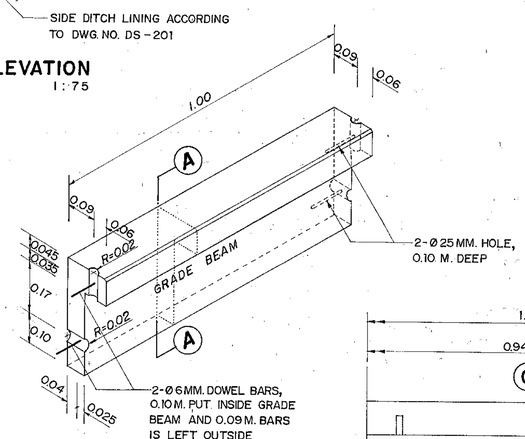


## GRADE BEAM
SCALE 1 : 10

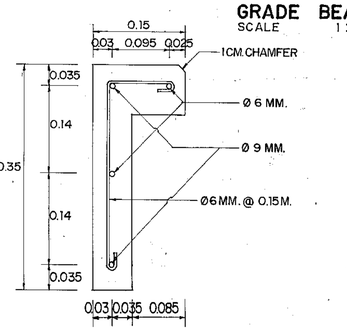


## SECTION (A)-(A)
SCALE 1 : 5

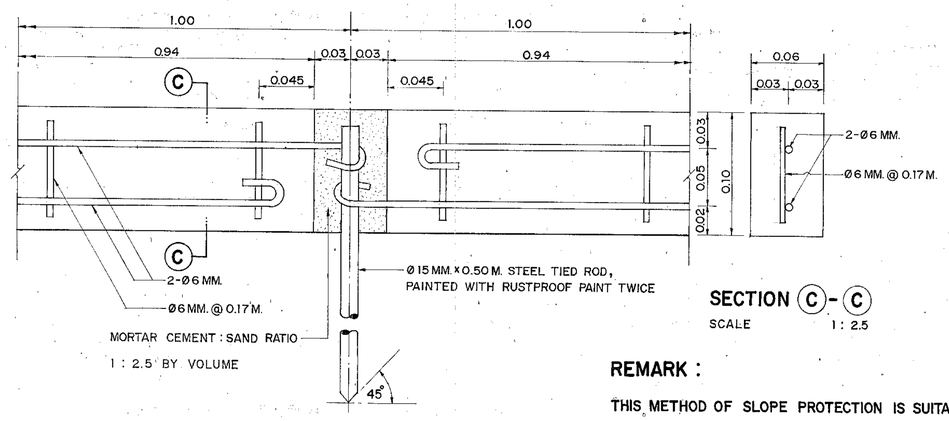


## SECTION (B)-(B)
SCALE 1 : 2.5

## SECTION (C)-(C)
SCALE 1 : 2.5

## GRID BEAM

## CONSTRUCTION DETAILS

1. GRADE BEAM, GRID BEAM AND END BEAM ARE PRE-CAST. THE LENGTH OF BOTH GRADE BEAM AND END BEAM IS 100 CM. AND OF GRID BEAM IS 94 CM.
2. TO SET THE GRADE BEAM, POUR SOME MORTAR INTO A GRADE BEAM'S EMPTY SPACE THAT IS FOR INSERTING THE DOWEL BAR. WHEN THE SPACE IS FULL, PUT ANOTHER GRADE BEAM DOWN SO THAT ITS DOWEL BAR INSERTS INTO THE MORTAR-FULL SPACE OF THE PREVIOUS GRADE BEAM. SEAL THE JOINT WITH MORTAR.
3. TO SET ANCHORAGE TIED ROD (FOR 4-MEMBER JOINT), AFTER GRID BEAM IS SET AS IN THE DRAWING, DRIVE TIED ROD INTO IT AND FILL THE JOINT WITH MORTAR.
4. FILL TOP SOIL INTO EMPTY SPACE OF GRID BEAM (8 CM. THICK) AND WELL COMPACT IT, IF THERE IS NO SEEPAGE OF UNDERGROUND WATER IN THE BACK SLOPE. FILL 1½"-3" STONES INTO EMPTY SPACE OF GRID BEAM (10 CM. THICK), IF THERE IS SEEPAGE OF UNDERGROUND WATER IN THE BACK SLOPE.
5. TO SET END BEAM, DIG INTO 5 CM.-DEEP HOLES. THE END BEAM ARE 0.5 CM. APART. STICK EACH TIED RODS (Ø 15 MM. x 0.50 M., RUSTPROOF PAINTED TWICE) INTO THE 0.5 CM. SPACES. (NOT ALL THE SPACE ARE NECESSARILY USED, AS DIRECTED BY THE PROJECT ENGINEER) THEN SEAL THE JOINTS WITH MORTAR. END BEAMS ARE TO BE SET ON THE SIDE AND THE UPPER WHEN THE GRID BEAM SETTING IS FINISHED.
6. IF THE CONSTRUCTION IS DONE ON SLOPE ½ : 1 TO 1 : 1, TIED RODS MUST BE STICKED INTO EVERY JOINT OF THE GRID BEAM. THE GRID BEAM SHOULD BE PUT HORIZONTALLY AND VERTICALLY. THERE IS NO NEED FOR CONSTRUCTION OF END BEAM, AS DIRECTED BY THE PROJECT ENGINEER AND APPROVAL BY THE LOCATION AND DESIGN DIVISION D.O.H.
7. GRADE BEAM AND END BEAM CAN BE CAST-IN-PLACE, YET AS DIRECTED BY THE PROJECT ENGINEER.
8. THE CONCRETE MIXTURES ARE 1:2:4 BY VOLUME. PORTLAND CEMENT SHALL BE TYPE I.
9. REINFORCING STEEL, DOWEL BAR AND TIED ROD SHALL CONFORM TO TIS.20 GRADE SR24.
10. GRID BEAM SHOULD BE CONSTRUCTED FOR EARTH OR EARTH-SOFT ROCK BACK SLOPE AND/OR AREA WITH UNDERGROUND WATER SEEPAGE. THE CONSTRUCTION WILL BE DIRECTED BY THE PROJECT ENGINEER IN TERMS OF EXPENSE AND EROSIVE PREVENTION AND APPROVAL BY THE LOCATION AND DESIGN DIVISION D.O.H.
11. ALL DIMENSIONS ARE IN METERS UNLESS OTHERWISE INDICATED.

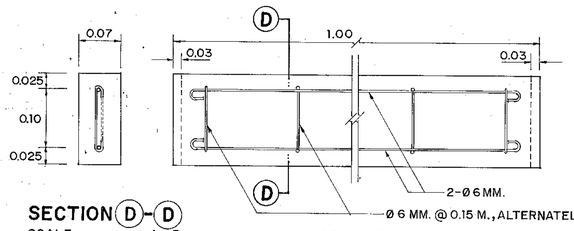


## SECTION (D)-(D)
SCALE 1 : 5

## END BEAM
SCALE 1 : 5

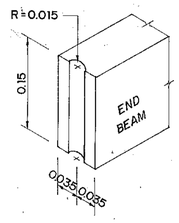


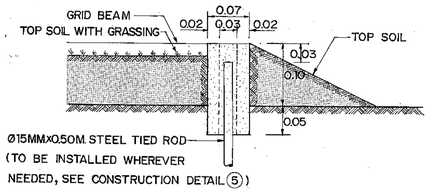


## END BEAM SETTING
SCALE 1 : 5

**REMARK :**

THIS METHOD OF SLOPE PROTECTION IS SUITABLE ONLY IN SPECIFIC LOCATIONS AND CERTAIN CONDITIONS, IT SHOULD BE APPLIED WITH THE FIRM INFORMATIONS CONCERNED AND RECOMMENDED BY THE ENGINEER.

# KINGDOM OF THAILAND
MINISTRY OF TRANSPORT AND COMMUNICATIONS
DEPARTMENT OF HIGHWAYS

STANDARD DRAWING

CONCRETE GRID BEAM BACK SLOPE PROTECTION

| | | |
|---|---|---|
| DESIGNED : D.O.H. & CONSULTANTS | CHECKED : | DATE JULY 1994 |
| SUBMITTED : (DIRECTOR OF LOCATION & DESIGN DIVISION) | | SCALE AS SHOWN |
| APPROVED : FOR (DIRECTOR GENERAL) | | DWG. NO. SP-301 |
| | | SHEET NO. 66 |

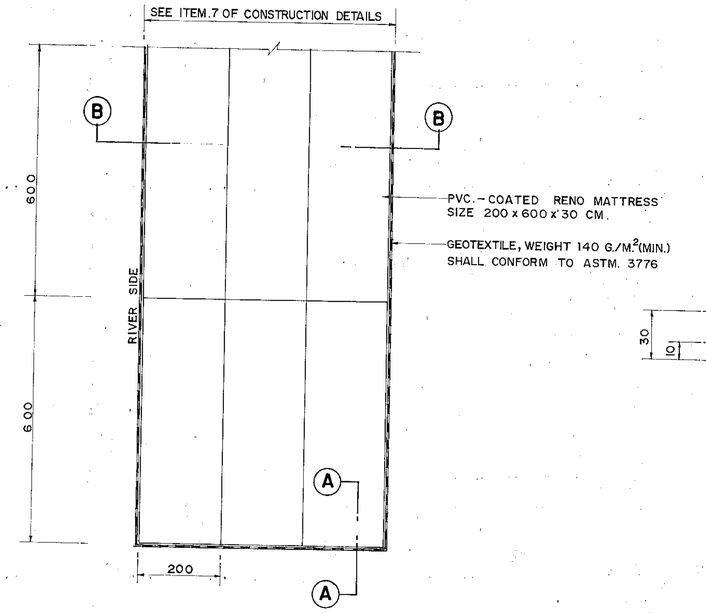


## RENO MATTRESS ARRANGEMENT PLAN

SCALE 1:75

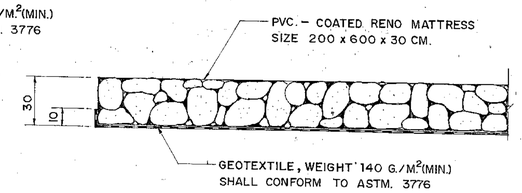


## SECTION (A) – (A)

SCALE 1:20

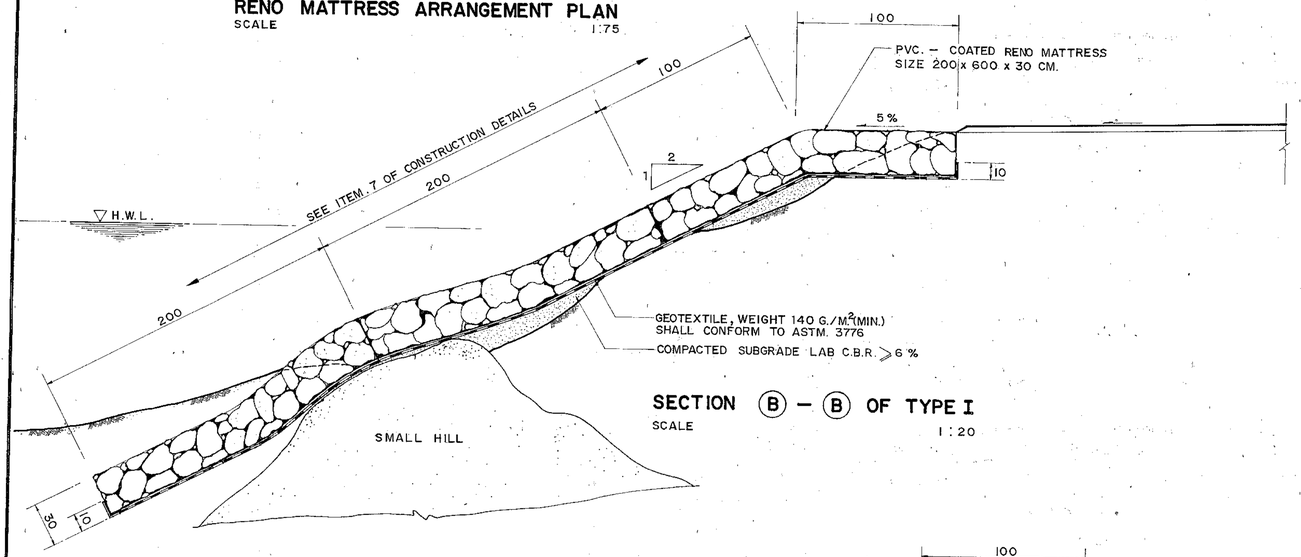


## SECTION (B) – (B) OF TYPE I

SCALE 1:20

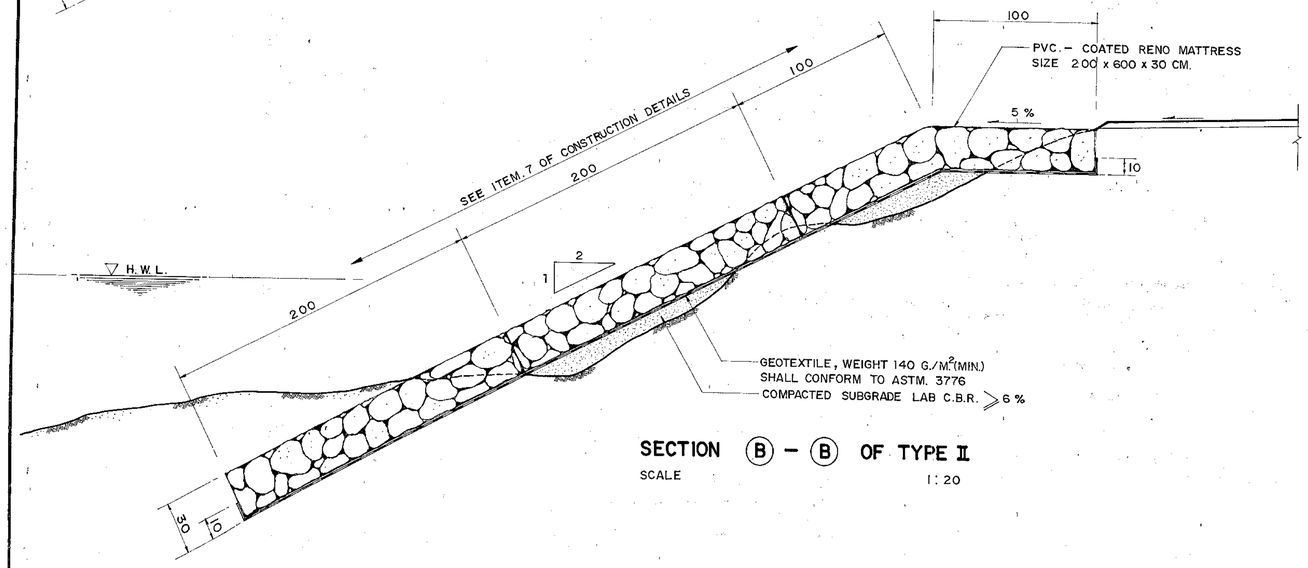


## SECTION (B) – (B) OF TYPE II

SCALE 1:20

## RENO OR WIRE MATTRESS

**PVC.– COATED RENO MATTRESS** : OR GALVANIZED WIRES THAT IS COATED WITH PVC. DETAILS ARE AS FOLLOWS :

### 1. NETTING

THE GALVANIZED WIRES COATED WITH PVC. ARE MADE INTO 6 x 8 CM. (± 10%) HEXAGONAL. NETTING JOINED TOGETHER BY TWISTING THE WIRES ROUND EACH OTHER TWICE AS SHOWN IN THE PICTURE.

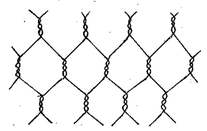

### 2. WIRES

THE WIRE MUST BE ABLE TO RESIST THE TENSION OF 28.5 – 51 KG. / MM.$^2$ (ACCORDING TO BS 1052 / 1980 STANDARD)

THE DIAMETER OF WIRE FOR FRAME IS AT LEAST 2.7 MM.

THE DIAMETER OF WIRE FOR NETTING IS AT LEAST 2.0 MM.

THE DIAMETER OF WIRE FOR BOX WRAPPING IS AT LEAST 2.0 MM.

AND THE WIRE IS LONG ENOUGH TO BE USED IN INSTALLATION (ABOUT 5 % OF RENO MATRESS' WEIGHT).

### 3. GALVANIZING

THE WIRES MUST BE GALVANIZED ACCORDING TO BS 443 / 1982 STANDARD. THE MINIMUM OF ZINC'S WEIGHT USED IN ACCORDANCE WITH THE DIAMETER OF WIRE IS SHOWN :

| WIRE'S DIAMETER (MM.) | WEIGHT OF ZINC COATING (GM./M.$^2$) |
|---|---|
| 2.0 | 240 |
| 2.7 | 260 |

### 4. PVC.– COATED

AFTER HAVING GALVANIZED, THE WIRE MUST ALSO BE COATED WITH BLACK OR GREY PAINT PVC. (POLY VINYL CHLORIDE). THE AVERAGE THICKNESS OF PVC. COATING IS 0.55 MM. (AND NOT LESS THAN 0.40 MM.) THE QUALITIES OF PVC. SHOULD BE AS FOLLOWS :

A. BONDING TO WIRE

THE BONDING QUALITY CAN BE TESTED BY DIPPING PVC.– COATED WIRE INTO DISSOLVED POTASSIUM PERMANGANATE (1%) FOR 50 HOURS CONTINUOUSLY AT THE ROOM TEMPERATURE. THE DISSOLVED POTASSIUM PERMANGANATE WILL ERODE, INTO THE WIRE'S SURFACE AND PVC., NOT MORE THAN 15 MM. WHICH EXAMINATION BY CUTTING THE END OF WIRE.

B. EROSION DURABILITY OF PVC.

AFTER THE PVC.– COATED WIRE (NOT THE TWO END PARTS) HAS BEEN PUT INTO THE CONCENTRATED SOLUTION OF SODIUM CHLORIDE FOR 60 HOURS CONTINUOUSLY AT THE ROOM TEMPERATURE, THE PVC.'S TOTAL WEIGHT MUST STILL REMAIN.

C. EROSION DURABILITY OF END PART'S WIRE

AFTER THE PVC.– COATED WIRE HAS BEEN PUT INTO THE 50 % SOLUTION OF HYDROCHLORIC ACID FOR 50 HOURS CONTINUOUSLY AT THE ROOM TEMPERATURE, ITS END PART SHOULD NOT BE ERODE MORE THAN 20 MM.

D. TEMPERATURE DURABILITY

AFTER THE PVC.– COATED WIRE HAS BEEN LEFT IN 100°C FOR 100 HOURS CONTINUOUSLY, IT QUALITIES SHOULD NOT CHANGE WHEN THE WIRE BE BROUGHT BACK TO TEST IN ACCORDING TO ITEM A–C.

### 5. DEVIATION

THE DEVIATION OF THE WIRE'S DIAMETER IS LESS THAN ± 2.5 %

### 6. ROCKS

THE ROCKS USED FOR THIS WORK MUST BE HARD ENOUGH AND NOT CRUMBLE WHEN WET AND ENDURE REGARDLESS OF THE CLIMATE. THEY ARE GRANITE, LIME STONE, SAND STONE, GRAVEL AND CRACKED CONCRETE. THE AVERAGE SIZE OF THE ROCKS SHOULD BE 6–10 CM. OR ±(5% – 7%).

## CONSTRUCTION DETAILS OF RENO MATTRESS

1. CLEAR THE AREA OF RENO MATTRESS CONSTRUCTION AND MARK THE SHAPE OF SIDE SLOPE AS SHOWN IN THE DRAWING AS WELL AS WELL COMPACT THE GROUND. IF THERE IS A SMALL HILL IN THE AREA WHICH MAKES IT IMPOSSIBLE TO REGULARLY MAKE THE SIDE SLOPE, THE RENO MATTRESS ON THE SMALL HILL SHALL BE CONSTRUCTED AS SHOWN IN SECTION (B)–(B) OF TYPE I.
2. LAY THE GEOTEXTILE ON THE SIDE SLOPE BEFORE CONSTRUCTION THE RENO MATTRESS.
3. SHAPE THE GROUND TO EXISTING CONDITION AFTER THE RENO MATTRESS CONSTRUCTION IS FINISHED.
4. GENERAL DETAILS OF PVC.– COATED RENO MATTRESS ARE AS STATED IN THE TOPIC PVC.– COATED RENO MATTRESS.
5. THE PROJECT ENGINEER WILL ADJUST THE SUITABLE AREA IN SITE FOR RENO MATTRESS CONSTRUCTION.
6. THE GEOTEXTILE USED IN THIS CONSTRUCTION IS MADE FROM NONWOVENS TYPE. THE INSTRUCTION ON HOW TO USE ARE GIVEN BY THE PRODUCERS OF THE PRODUCTS AND ARE APPROVED BY THE ENGINEER.
7. THE PART OF RENO MATTRESS STICKING INTO STREAM CAN BE NECESSARILY ADJUSTED SO AS TO SUIT THE AREA.
8. ALL DIMENSIONS ARE IN CENTIMETERS UNLESS OTHERWISE INDICATED.

## REMARK :

THIS METHOD OF SLOPE PROTECTION IS SUITABLE ONLY IN SPECIFIC LOCATIONS AND CERTAIN CONDITIONS, IT SHOULD BE APPLIED WITH THE FIRM INFORMATIONS CONCERNED AND RECOMMENDED BY THE ENGINEER.

# KINGDOM OF THAILAND

MINISTRY OF TRANSPORT AND COMMUNICATIONS
DEPARTMENT OF HIGHWAYS

STANDARD DRAWING

RENO MATTRESS SLOPE PROTECTION

| | | |
|---|---|---|
| DESIGNED : D.O.H. & CONSULTANTS | CHECKED : | DATE JULY 1994 |
| SUBMITTED : (DIRECTOR OF LOCATION & DESIGN DIVISION) | | SCALE AS SHOWN |
| APPROVED : FOR (DIRECTOR GENERAL) | | DWG. NO. SP-401 |
| | | SHEET NO. 67 |

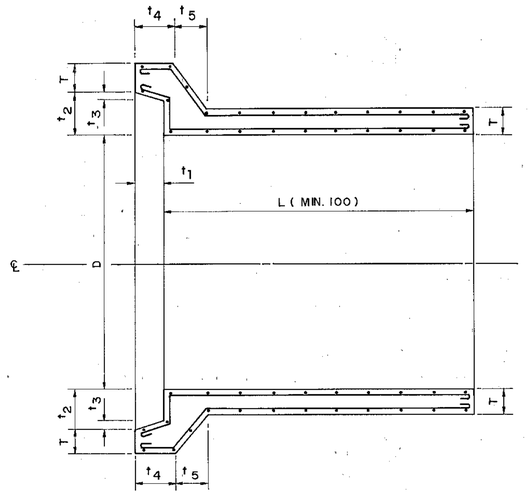


(A) BELL AND SPIGOT TYPE

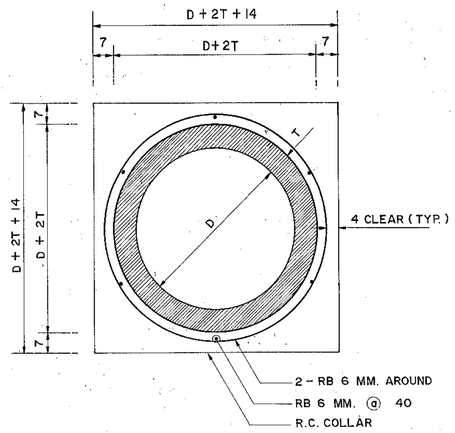


(A) TRANSVERSE SECTION

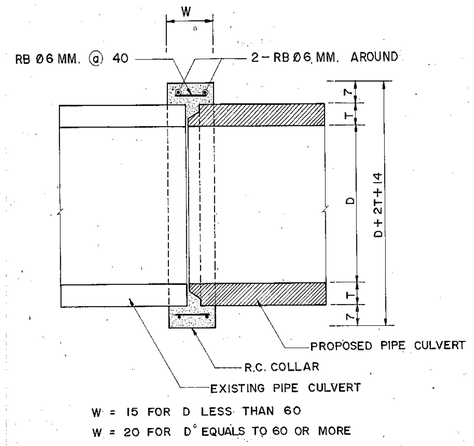


(B) LONGITUDINAL SECTION

**PIPE EXTENSION**
NOT TO SCALE

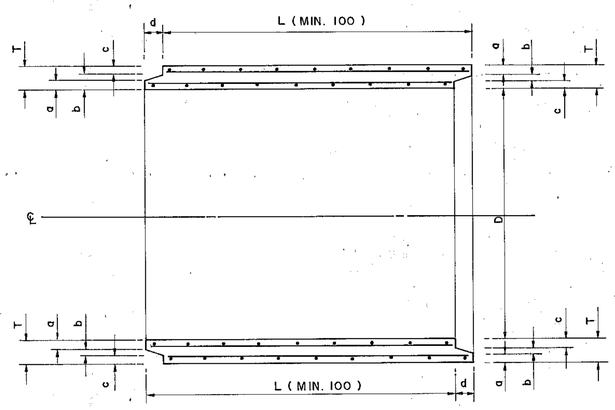


(B) TONGUE AND GROOVE TYPE

**DETAIL OF R.C. PIPE CULVERT**
NOT TO SCALE

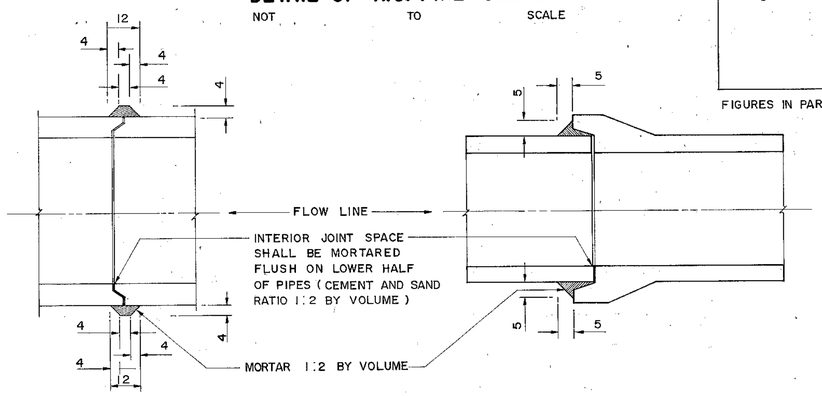


(A) TONGUE AND GROOVE TYPE

(B) BELL AND SPIGOT TYPE

**PIPE CONNECTION DETAILS**
NOT TO SCALE

## TABLE 1

| R.C. PIPE CULVERT CLASS | INSIDE DIAMETER ( D ) ( CM. ) | WALL THICKNESS ( T ) ( CM. ) | MIN. CIRCULAR REINFORCEMENT ( CM.²/M. ) | | CRUSHING LOAD TO PRODUCE 0.03 CM. CRACK WIDTH AND 30 CM. CRACK LENGTH ( KG./M. ) | MAXIMUM CRUSHING LOAD ( KG./M. ) | ULTIMATE COMPRESSIVE STRENGTH FOR Ø 15 x 30 CM. CONCRETE CYLINDER AT 28 DAYS AGE ( KG./CM.² ) | OVER FILL ON R.C. PIPE CULVERT NOT MORE THAN ( METERS ) |
|---|---|---|---|---|---|---|---|---|
| | | | INNER CAGE | OUTER CAGE | | | | |
| 2 | 30 | 5.0 | 1.5 | – | 3,060 | 4,590 | 280 (350) | 10.0 |
| | 40 | 6.0 | 2.5 | – | 4,080 | 6,120 | | |
| | 50 | 7.0 | 3.8 | – | 5,100 | 7,650 | | |
| | 60 | 7.5 | 5.7 | – | 6,120 | 9,180 | | |
| | 80 | 9.5 | 5.8 | 4.1 | 8,160 | 12,240 | | |
| | 100 | 11.0 | 7.0 | 5.2 | 10,200 | 15,300 | | |
| | 120 | 12.5 | 8.9 | 6.8 | 12,240 | 18,360 | | |
| | 150 | 15.0 | 12.5 | 9.5 | 15,300 | 22,950 | 350 (440) | 11.0 |
| 3 | 30 | 5.0 | 1.5 | – | 1,990 | 3,060 | 280 (350) | 8.0 |
| | 40 | 6.0 | 1.5 | – | 2,650 | 4,080 | | |
| | 50 | 7.0 | 1.5 | – | 3,320 | 5,100 | | |
| | 60 | 7.5 | 1.5 | – | 3,980 | 6,120 | | |
| | 80 | 9.5 | 4.0 | – | 5,300 | 8,160 | | |
| | 100 | 11.0 | 4.2 | 3.2 | 6,630 | 10,200 | | |
| | 120 | 12.5 | 5.1 | 3.8 | 7,960 | 12,240 | | |
| | 150 | 15.0 | 7.2 | 5.5 | 9,950 | 15,300 | | |

FIGURES IN PARENTHESES ARE ULTIMATE COMPRESSIVE STRENGTH FOR 15 x 15 x 15 CM. CONCRETE CUBE AT 28 DAYS AGE

## TABLE 2

| R.C. PIPE CULVERT CLASS | INSIDE DIAMETER ( D ) ( CM. ) | WALL THICKNESS ( T ) ( CM. ) | PIPE END DETAILS ( CM. ) | | | | | | | | |
|---|---|---|---|---|---|---|---|---|---|---|---|
| | | | BELL & SPIGOT TYPE | | | | | TONGUE & GROOVE TYPE | | | |
| | | | $t_1$ | $t_2$ | $t_3$ | $t_4$ | $t_5$ (MIN.) | a | b | c | d |
| 2 & 3 | 30 | 5.0 | 6.0 | 6.6 | 0.4 | 8.5 | 15.0 | 1.9 | 0.8 | 2.3 | 3.0 |
| | 40 | 6.0 | 6.7 | 7.6 | 0.4 | 9.7 | 18.0 | 2.3 | 1.0 | 2.7 | 3.0 |
| | 50 | 7.0 | 7.0 | 8.6 | 0.4 | 10.5 | 21.0 | 2.8 | 1.0 | 3.2 | 4.0 |
| | 60 | 7.5 | 7.6 | 9.1 | 0.4 | 11.4 | 22.5 | 2.8 | 1.5 | 3.2 | 4.0 |
| | 80 | 9.5 | 8.9 | 11.1 | 0.4 | 13.7 | 28.5 | 3.8 | 1.5 | 4.2 | 4.5 |
| | 100 | 11.0 | 9.5 | 12.6 | 0.4 | 15.0 | 33.0 | 4.3 | 2.0 | 4.7 | 4.5 |
| | 120 | 12.5 | 10.0 | 14.1 | 0.4 | 16.5 | 37.5 | 4.8 | 2.5 | 5.2 | 5.0 |
| | 150 | 15.0 | 10.0 | 16.6 | 0.4 | 17.7 | 45.0 | 5.7 | 3.0 | 6.3 | 6.0 |

## NOTES :

1. ALL DIMENSIONS ARE IN CENTIMETERS UNLESS OTHERWISE INDICATED.
2. REINFORCED CONCRETE PIPE CULVERT CLASSES 2 AND 3 SHALL CONFORM TO TIS 128.
3. CEMENT, STEEL REINFORCEMENT, AGGREGATES AND TEST METHODS USED FOR R.C. PIPE CULVERT SHALL CONFORM TO THE REQUIREMENT OF TIS. 128 OR TO THE DEPARTMENT OF HIGHWAYS STANDARDS.
   - 3.1 CEMENT CONTENT USED FOR CONCRETE MIX SHALL NOT BE LESS THAN 335 KILOGRAM PER CUBIC METER OF CONCRETE.
   - 3.2 CONCRETE COVER FOR SINGLE LAYER CIRCULAR REINFORCEMENT SHALL BE 0.35 TO 0.5 TIME OF WALL THICKNESS (MEASURED FROM INNER WALL).
   - 3.3 CONCRETE COVER FOR DOUBLE LAYERS CIRCULAR REINFORCEMENT SHALL BE 2.5 CM. IN AVERAGE BUT NOT LESS THAN 1.5 CM.
   - 3.4 LONGITUDINAL REINFORCEMENT SPACING FOR PIPE SIZE Ø 50 CM. OR SMALLER SHALL BE A MINIMUM OF 4-Ø4 MM. BARS OR 8-Ø4 MM. BARS FOR PIPE Ø 60 CM. OR LARGER.
   - 3.5 CIRCULAR REINFORCEMENT SPACING FOR PIPE SIZE Ø 30 CM. TO Ø 80 CM. SHALL BE 10 CM. OR LESS AND FOR PIPE SIZE Ø 100 CM. TO Ø 150 CM. SHALL BE 15 CM. OR LESS BUT NOT MORE THAN THEIR WALL THICKNESS.
4. THE CULVERT WHICH HAVING TRANSVERSE REINFORCEMENT IN ELLIPTICAL CAGE AS SPECIFIED IN THE TIS. 128 SHALL NOT BE USED.
5. PIPE MAY BE EITHER BELL AND SPIGOT TYPE OR TONGUE AND GROOVE TYPE AS DIRECTED BY THE ENGINEER.
6. CULVERT JOINTS SHALL BE MORTARED AS SHOWN ON THE DRAWING WITH CEMENT MORTAR (1:2 BY VOLUME).
7. CULVERT LENGTH (L) SHALL BE 100 CM. UNLESS OTHERWISE SPECIFIED.
8. REINFORCED CONCRETE PIPE CULVERT CLASS 2 SHALL BE USED UNDER PAVEMENT.
9. REINFORCED CONCRETE PIPE CULVERT CLASS 3 SHALL BE USED UNDER SIDEWALK.

**KINGDOM OF THAILAND**
MINISTRY OF TRANSPORT AND COMMUNICATIONS
DEPARTMENT OF HIGHWAYS

STANDARD DRAWING

R.C. PIPE CULVERT

| | | |
|---|---|---|
| DESIGNED: D.O.H. & CONSULTANTS | CHECKED: | DATE JULY 1994 |
| SUBMITTED: (DIRECTOR OF LOCATION & DESIGN DIVISION) | | SCALE NONE |
| APPROVED: (DIRECTOR GENERAL) | | DWG. NO. DS-101 |
| | | SHEET NO. 68 |

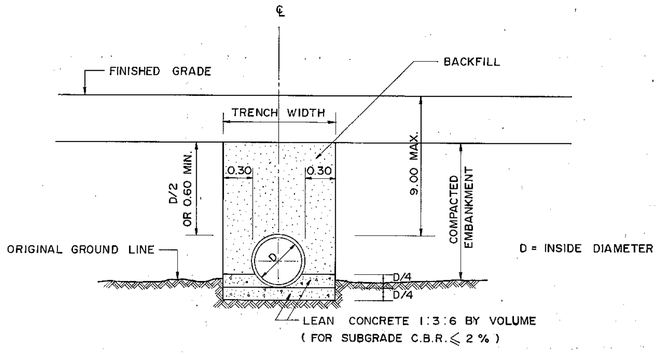


(a) CONCRETE CRADLE BEDDING

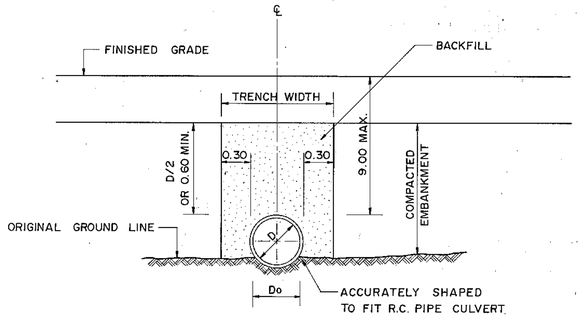


(b) ORDINARY BEDDING

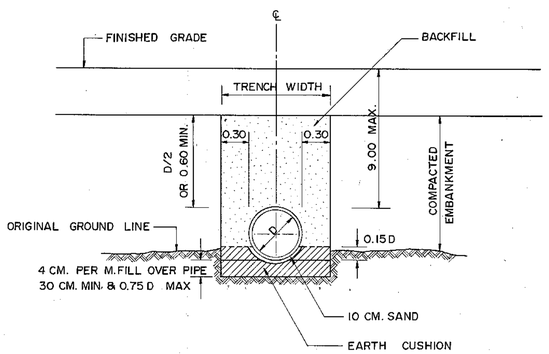


(c) BEDDING FOR ROCK OR UNYIELDING FOUNDATION

R.C. PIPE CULVERTS INSTALLATION BY TRENCH METHOD

NOT TO SCALE

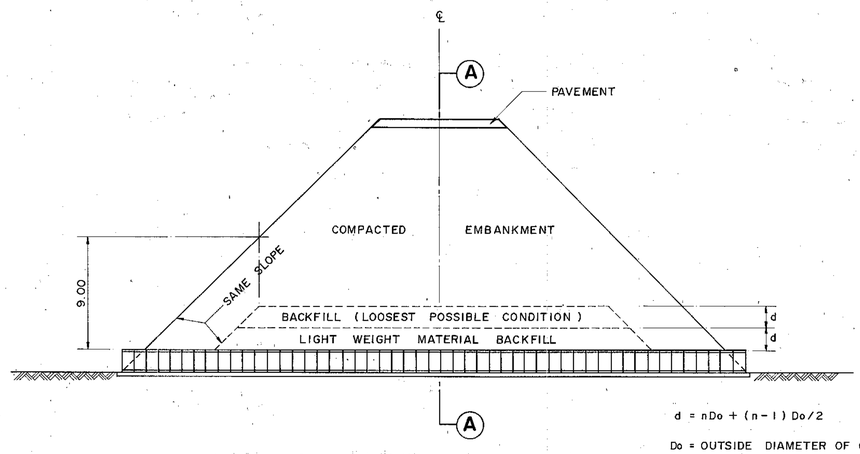


d = nDo + (n - 1) Do/2

Do = OUTSIDE DIAMETER OF CULVERT

n = NUMBER OF ROWS OF CULVERT

LONGITUDINAL SECTION

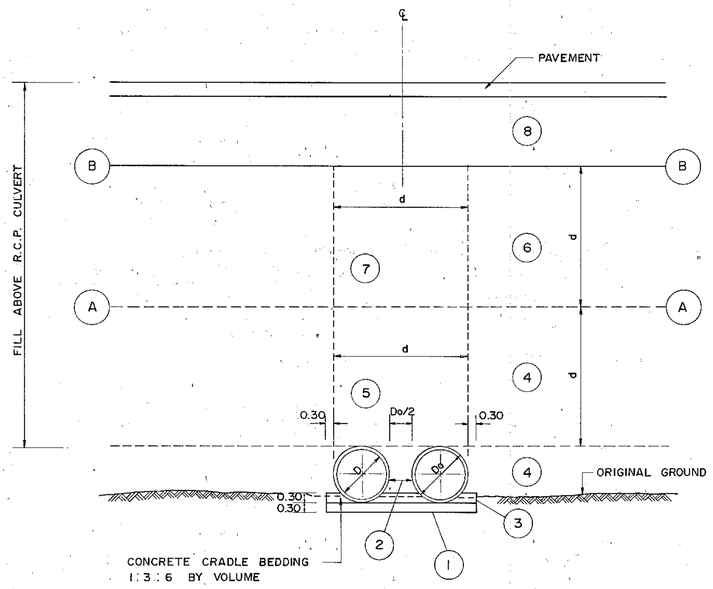


SECTION (A)-(A)

R.C. PIPE CULVERTS INSTALLATION FILL ABOVE PIPE OVER 9.00 M.

NOT TO SCALE

## NOTES :

### REINFORCED CONCRETE CULVERT PIPE INSTALLATION (MAX. FILL HEIGHT 9.00 M.)

A.) CONSTRUCTION METHODS WHEN FILL HEIGHT IS LESS THAN 1.20 M.

1. THE PROJECTION METHODS SHALL BE USED FOR PIPE INSTALLATION.
2. THE PIPE LINE LAYOUT SHALL BE SUITABLE FOR THE TERRAIN. THE EXISTING GROUND ALONG THE LINE OF CULVERT SHALL BE PREPARED TO THE SPECIFIED SLOPE.
3. PIPE BEDDING SHALL BE TYPE (a),(b) OR (c) AS SHOWN ON THE DRAWING AND SHALL DEPEND UPON PREVAILING SOIL CONDITION AND THE JUDGEMENT OF THE ENGINEER.
4. AFTER THE PIPE HAS BEEN PLACED, THE SUBGRADE AND/OR PORTION OF PAVEMENT SECTION WHICH ARE TO BE LAID ALONG BOTH SIDES OF THE LINE WITH IN A DISTANCE OF 4 PIPE DIAMETERS BUT NOT LESS THAN 5.00 M. FROM CENTERLINE OF THE PIPE SHALL BE CONSTRUCTED LIGHT WEIGHT CONSTRUCTION EQUIPMENT USED FOR COMPACTION SHALL OPERATE IN A DIRECTION PERPENDICULAR TO CENTERLINE OF ROADWAY (OR PARALLEL TO PIPE LINE UNTIL THE BACKFILL HAS REACHED AN ELEVATION OF AT LEAST 30 CM. ABOVE THE TOP OF PIPE.

B.) CONSTRUCTION METHODS WHEN FILL HEIGHT EXCEEDS 1.20 M.

1. PIPE INSTALLATION SHALL BE BY TRENCH METHOD. SUBGRADE SHALL BE FIRST CONSTRUCTED TO AN ELEVATION D/2 OR AT LEAST 60 CM. OVER TOP OF PROPOSED PIPE. A TRENCH SHALL THEN BE EXCAVATED ALONG THE PROPOSED LINE AS SHOWN ON THE DRAWING. TRENCH WALLS SHALL HAVE A SMOOTH SURFACE AND SHALL BE CONSTRUCTED VERTICALLY.
2. THE TRENCH BED SHALL BE PREPARED TO THE SPECIFIED SLOPE. BEDDING TYPE SHALL BE (a),(b) OR (c) DEPENDING ON FOUNDATION SOIL AND AS DIRECTED BY THE ENGINEER.
3. PIPE SHALL BE INSTALLED ACCORDING TO SIZES SHOWN ON THE DRAWINGS. BACKFILLING OF PIPE CULVERTS SHALL NOT BE PERMITTED UNTIL AT LEAST 48 HOURS HAVE ELAPSED AFTER JOINT HAVE BEEN COMPLETED.
4. BACKFILL SHALL BE PLACED TO THE SUBGRADE ELEVATION AS DESCRIBED IN NOTE 1. BACKFILL SHALL BE A SELECT MATERIAL AND SHALL REQUIRE THE APPROVAL OF THE ENGINEER. METHOD OF COMPACTION OF BACKFILL SHALL BE THE SAME AS REQUIRED FOR SUBGRADE. COMPACTION EQUIPMENT SHALL BE APPROVED BY THE ENGINEER.

### REINFORCED CONCRETE CULVERT PIPE INSTALLATION (FILL HEIGHT OVER 9.00 M.)

1. AFTER EXISTING GROUND HAS BEEN PREPARED TO SPECIFIED SLOPE AND ELEVATION, CONCRETE BEDDING FOR PIPE SUPPORT SHALL BE PLACED AS SHOWN IN SECTION (A)-(A)
2. THE NUMBER OF PIPE BARRELS AND SIZE OF PIPE CULVERT SHALL BE INSTALLED AS SHOWN.
3. A CONCRETE CRADLE SHALL THEN BE PLACED AS SHOWN IN SECTION (A)-(A)
4. EMBANKMENT SHALL BE CONSTRUCTED WITH SELECTED MATERIAL AND COMPACTED IN ACCORDANCE WITH THE TYPICAL CROSS-SECTION FOR THE ROUTE. EMBANKMENT SHALL BE COMPACTED TO THE (A)-(A) LEVEL, "d" METERS ABOVE THE TOP OF PIPE WITH LIGHT WEIGHT COMPACTION EQUIPMENT. CONSTRUCTION PROCEDURES SHALL REQUIRE SUPERVISION BY THE ENGINEER.
5. A TRENCH SHALL BE EXCAVATED TO A WIDTH "d" METERS WITH VERTICAL, SMOOTH WALL AND BACKFILL WITH LIGHT WEIGHT MATERIAL OF A TYPE SPECIFIED BY THE ENGINEER.
6. A) WHEN FILL HEIGHT IS LESS THAN 18.00 M. THE CONSTRUCTION HAS REACHED THE (A)-(A) LEVEL AS DESCRIBED IN NOTE 4 & 5 ABOVE, FULL EMBANKMENT SHALL THEN BE PLACED TO MEET THE FINISHED SUBGRADE LEVEL.
   B) WHEN FILL HEIGHT EXCEEDS 18.00 M, EMBANKMENT CONSTRUCTION SHALL CONTINUE AS DESCRIBED IN NOTE 4 ABOVE UNTIL THE (B)-(B) LEVEL IS REACHED.
7. A TRENCH SHALL THEN BE EXCAVATED AS DESCRIBED IN NOTE 5 ABOVE EXCEPT BACKFILL SHALL BE REGULAR BACKFILL MATERIAL AND SHALL BE PLACED AS LOOSELY AS POSSIBLE WITHOUT COMPACTION.
8. THE REMAINING EMBANKMENT SHALL THEN BE CONSTRUCTED TO SUBGRADE LEVEL AND COMPACTED BY METHODS NORMALLY USED.
9. ALL DIMENSIONS ARE IN METERS UNLESS OTHERWISE INDICATED.

**KINGDOM OF THAILAND**
**MINISTRY OF TRANSPORT AND COMMUNICATIONS**
**DEPARTMENT OF HIGHWAYS**

STANDARD DRAWING

R.C. PIPE CULVERT INSTALLATION

| | | |
|---|---|---|
| DESIGNED : D.O.H. & CONSULTANTS | CHECKED : | DATE JULY 1994 |
| SUBMITTED : (DIRECTOR OF LOCATION & DESIGN DIVISION) | | SCALE NONE |
| | | DWG. NO. DS-102 |
| APPROVED : (DIRECTOR GENERAL) | | SHEET NO. 69 |

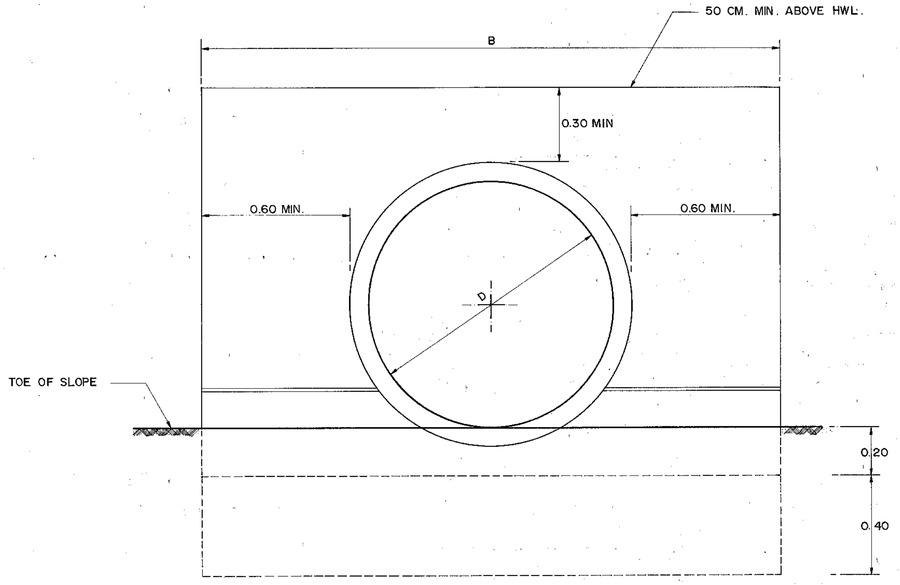


**SINGLE PIPE**
SCALE 1 : 12.5

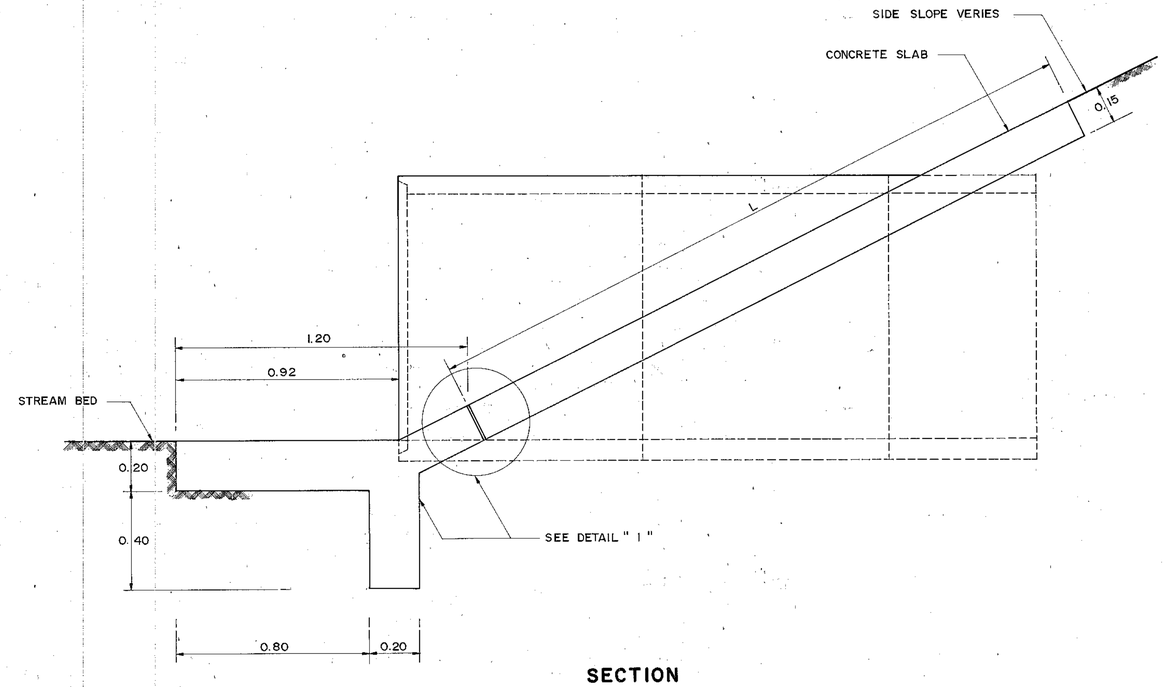


**SECTION**
SCALE 1 : 12.5

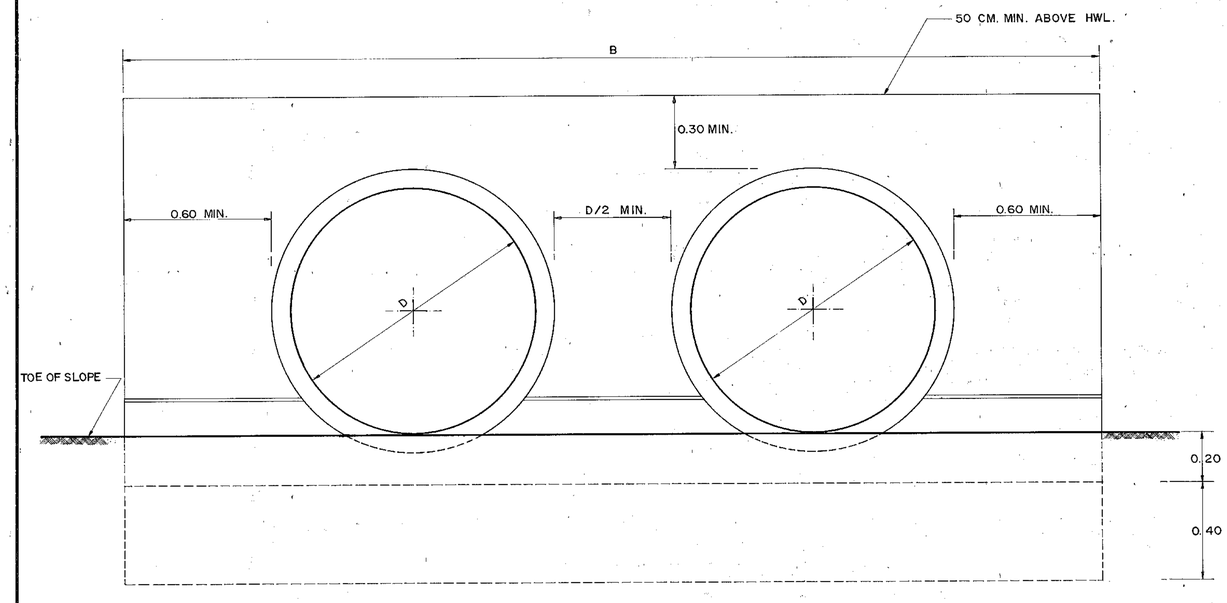


**MULTIPLE PIPES**
SCALE 1 : 12.5

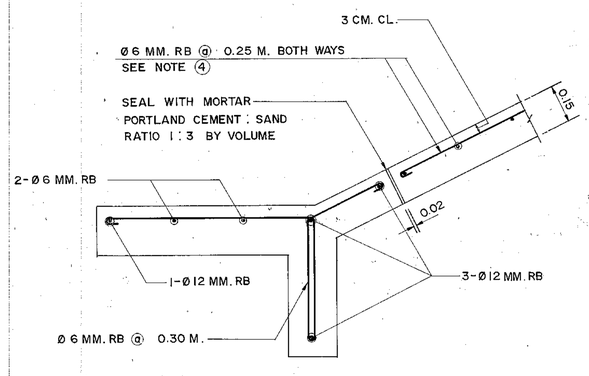


**DETAIL " 1 "**
SCALE 1 : 12.5

## NOTES :

1. ALL DIMENSIONE ARE IN METERS UNLESS OTHERWISE INDICATED
2. CONCRETE SHALL HAVE A MINIMUM ULTIMATE COMPRESSIVE STRENGTH OF 180 KSC. FOR 15 x 15 x 15 CM. CUBE AT 28 DAYS. AN APPROXIMATE MIX DESIGN PER CUBIC METER IS SUGGESTED AS FOLLOWS :

| | | |
|---|---|---|
| PORTLAND CEMENT TYPE I | 320 | KG. (MIN.) |
| SAND | 0.43 | $M^3$ |
| CRUSHED ROCK OR GRAVEL | 0.85 | $M^3$ |
| CONCRETE SLUMP | 10 | CM. (MAX.) |

3. REINFORCING STEEL SHALL CONFROM TO TIS.20 GRADE SR 24
4. STEEL REINFORCED IN CONCRETE SLAB SHALL BE REQUIRED ONLY WHEN (B x L) IS MORE THAN 9.00 SQ.M.
5. FOR ROLLING AND MOUNTAINOUS TERRAINS, THESE HEADWALLS SHALL BE USED AS NECESSARY.

# KINGDOM OF THAILAND
MINISTRY OF TRANSPORT AND COMMUNICATIONS
DEPARTMENT OF HIGHWAYS

STANDARD DRAWING

HEADWALL FOR R.C. PIPE CULVERT

| | | |
|---|---|---|
| DESIGNED : D.O.H. & CONSULTANTS | CHECKED : | DATE JULY 1994 |
| SUBMITTED : (DIRECTOR OF LOCATION & DESIGN DIVISION) | | SCALE 1 : 12.5 |
| | | DWG. NO. DS-103 |
| APPROVED : (DIRECTOR GENERAL) | | SHEET NO. 70 |

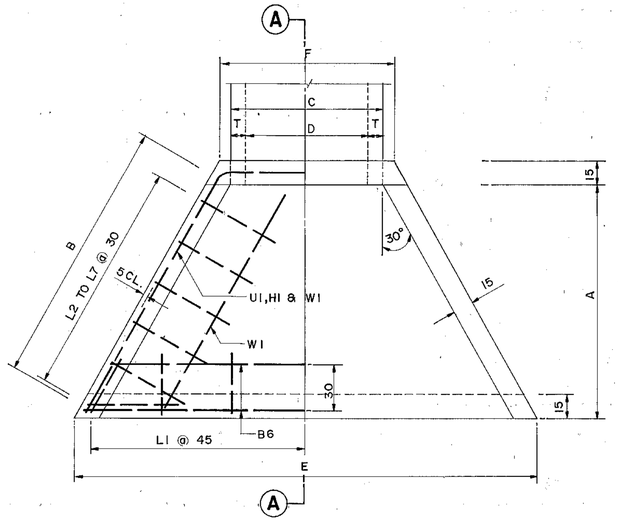


**PLAN**
NOT TO SCALE

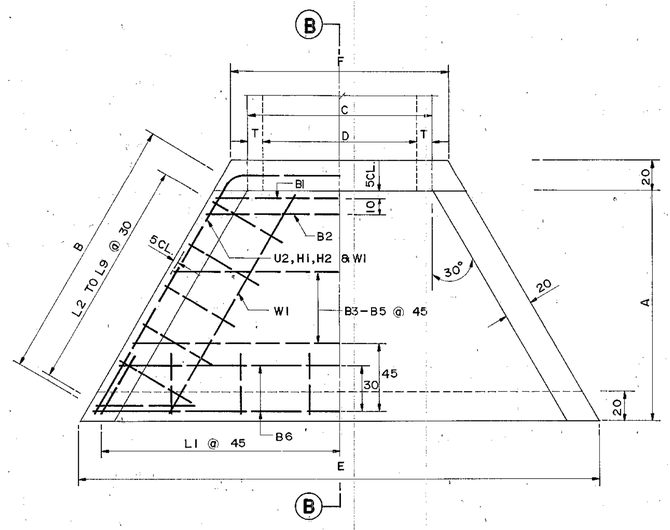


**PLAN**
NOT TO SCALE

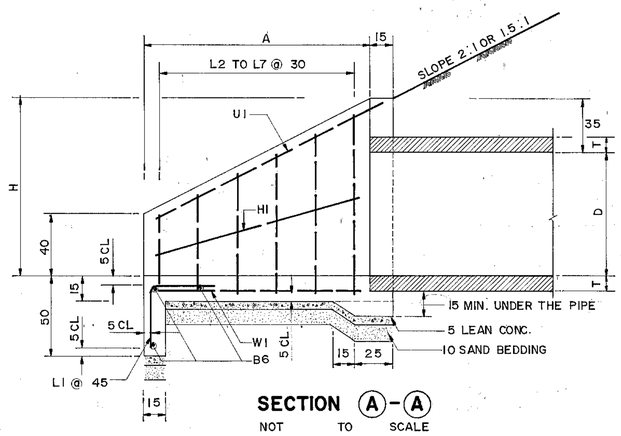


**SECTION (A)-(A)**
NOT TO SCALE

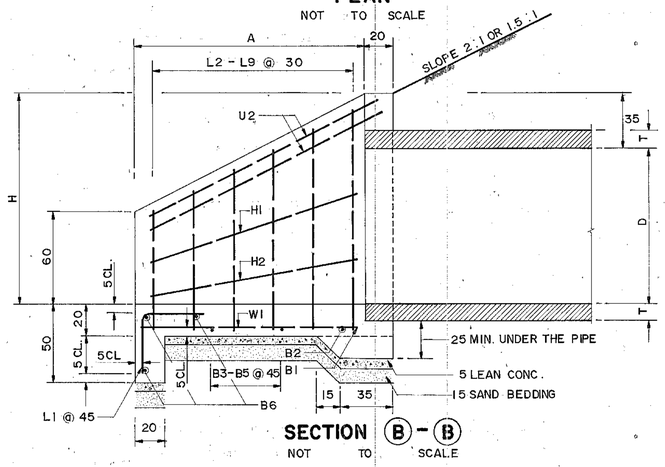


**SECTION (B)-(B)**
NOT TO SCALE

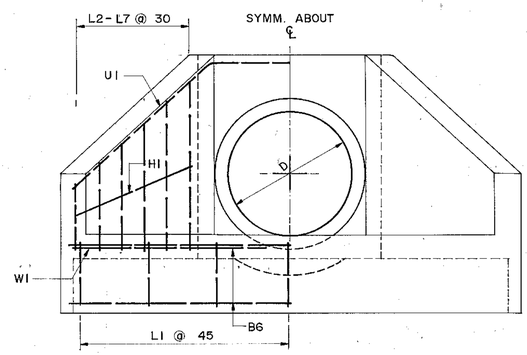


**END VIEW**

**DETAILS FOR Ø50, Ø60 & Ø80 PIPE CULVERTS**
NOT TO SCALE

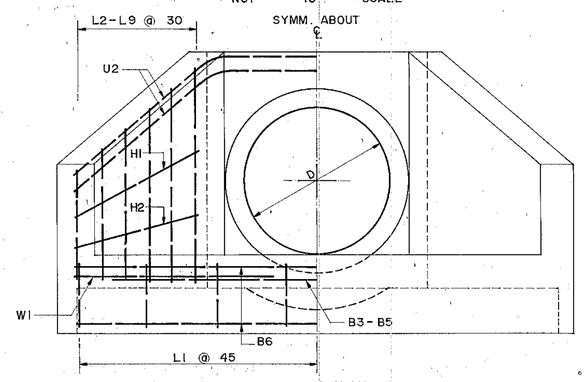


**END VIEW**

**DETAILS FOR Ø 100 & Ø 120 PIPE CULVERTS**
NOT TO SCALE

| TABLE OF REINFORCEMENTS | | | | | | | | | | | |
|---|---|---|---|---|---|---|---|---|---|---|---|
| BAR MARK | SIZE Ø (MM.) | D= 50 | | D= 60 | | D= 80 | | D= 100 | | D= 120 | |
| | | NO. | LENGTH | NO. | LENGTH | NO. | LENGTH | NO. | LENGTH | NO. | LENGTH |
| U1 | 12 | 1 | 313 | 1 | 374 | 1 | 498 | – | – | – | – |
| U2 | 16 | – | – | – | – | – | – | 2 | 535 | 2 | 658 |
| L1 | 12 | 5 | 80 | 6 | 80 | 8 | 80 | 8 | 80 | 10 | 80 |
| L2 | 16(12) | 2 | 107 | 2 | 107 | 2 | 107 | 2 | 132 | 2 | 132 |
| L3 | 16(12) | 2 | 120 | 2 | 120 | 2 | 120 | 2 | 145 | 2 | 145 |
| L4 | 16(12) | 2 | 133 | 2 | 133 | 2 | 133 | 2 | 158 | 2 | 158 |
| L5 | 16(12) | 2 | 146 | 2 | 146 | 2 | 146 | 2 | 171 | 2 | 171 |
| L6 | 16(12) | – | – | 2 | 159 | 2 | 159 | 2 | 184 | 2 | 184 |
| L7 | 16(12) | – | – | – | – | 2 | 172 | 2 | 197 | 2 | 197 |
| L8 | 16 | – | – | – | – | – | – | – | – | 2 | 120 |
| L9 | 16 | – | – | – | – | – | – | – | – | 2 | 225 |
| W1 | 12 | 4 | 96 | 4 | 119 | 4 | 165 | 4 | 165 | 4 | 211 |
| B1 | 16 | – | – | – | – | – | – | 1 | 162 | 1 | 185 |
| B2 | 16 | – | – | – | – | – | – | 1 | 174 | 1 | 197 |
| B3 | 12 | – | – | – | – | – | – | 1 | 220 | 1 | 242 |
| B4 | 12 | – | – | – | – | – | – | 1 | 272 | 1 | 294 |
| B5 | 12 | – | – | – | – | – | – | – | – | 1 | 346 |
| B6 | 12 | 3 | – | 3 | – | 3 | – | 3 | – | 3 | – |
| H1 | 12 | 2 | 99 | 2 | 122 | 2 | 169 | 2 | 181 | 2 | 225 |
| H2 | 12 | – | – | – | – | – | – | 2 | 177 | 2 | 223 |
| REINF (KG.) | | 25 | | 32 | | 41 | | 84 | | 111 | |
| CONC. ($M^3$) | | 0.6 | | 0.8 | | 1.2 | | 2.0 | | 2.8 | |

NOTE : FOR Ø 50, Ø 60 & Ø 80 PIPE CULVERTS, L2 – L7 SHALL BE Ø 12 MM. REBARS

## NOTES :

1. ALL DIMENSION ARE IN CENTIMETERS UNLESS OTHERWISE INDICATED.
2. CONCRETE SHALL HAVE A MINIMUM ULTIMATE COMPRESSIVE STRENGTH OF 210 KSC. FOR 15 x 15 x 15 CM. CUBE AT 28 DAYS. AN APPROXIMATE MIX DESIGN PER CUBIC METER IS SUGGESTED AS FOLLOWS :

| | | |
|---|---|---|
| PORTLAND CEMENT TYPE I | 350 | KG. (MIN.) |
| SAND | 0.43 | $M^3$ |
| CRUSHED ROCK OR GRAVEL | 0.86 | $M^3$ |
| CONCRETE SLUMP | 10 | CM. (MAX.) |

3. REINFORCING STEEL SHALL BE DEFROMED BARS CONFORMING TO TIS. 24 GRADE SD 30.
4. DESIGN WORKING STRESSES :–
   (a) CONCRETE , fc = 70 KSC.
   (b) STEEL , fs = 1400 KSC. n = 10
5. CLEAR CONCRETE COVER SHALL BE 4 CM. UNLESS OTHERWISE INDICATED .
6. LOCATION OF LAP SPLICE OF REBARS SHALL BE APPROVED BY THE ENGINEER.
7. LAP LENGTH SHALL NOT BE LESS THAN 24 BAR DIAMETER .
8. ALL CONCRETE EXPOSED CORNERS SHALL HAVE 2 CM. CHAMFER UNLESS OTHERWISE INDICATED.
9. DIMENSION OF HEADWALL AND QUANTITIES OF MATERIAL SHOWN IN THE TABLE ARE FOR EMBANKMENT SLOPE OF 2:1 ONLY. FOR EMBANKMENT SLOPE 1.5 : 1, ALL DIMENSION SHALL BE WORKED OUT FROM DIMENSION OF "A" AS SHOWN TOGETHER WITH THE FLARE ANGLE OF 30° AND THEN QUANTITIES OF MATERIALS SHALL BE CHANGED ACCORDINGLY .
10. UNLESS OTHERWISE SPECIFIED, THESE HEADWALLS SHALL BE USED FOR HIGHWAYS CLASS D AND CLASS 1 .
11. FOR ROLLING AND MOUNTAINOUS TERRAINS , THESE HEADWALLS SHALL BE USED AS NECESSARY .

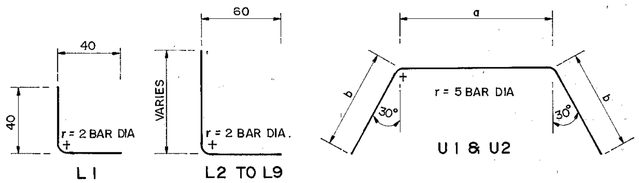


**BAR BENDING DIAGRAMS**
NOT TO SCALE

| TABLE OF DIMENSION | | | | | | | | | | |
|---|---|---|---|---|---|---|---|---|---|---|
| DIA. OF PIPE D | WALL THICKNESS T | DIMENSIONS | | | | | | | | |
| | | A | | B | C | E | F | H | a | b |
| | | S= 2:1 | S=1.5:1 | | | | | | | |
| 50 | 7 | 90 | 75 | 104 | 64 | 203 | 81 | 85 | 77 | 118 |
| 60 | 7.5 | 110 | 90 | 127 | 75 | 237 | 92 | 95 | 88 | 143 |
| 80 | 9.5 | 150 | 120 | 173 | 99 | 307 | 116 | 115 | 112 | 193 |
| 100 | 11 | 150 | 120 | 173 | 122 | 341 | 145 | 135 | 143 | 196 |
| 120 | 12.5 | 190 | 150 | 219 | 145 | 411 | 168 | 155 | 166 | 246 |

# KINGDOM OF THAILAND
## MINISTRY OF TRANSPORT AND COMMUNICATIONS
## DEPARTMENT OF HIGHWAYS

STANDARD DRAWING

R.C. HEADWALL FOR SINGLE R.C.P. CULVERT

| | | |
|---|---|---|
| DESIGNED : D.O.H. & CONSULTANTS | CHECKED : | DATE JULY 1994 |
| SUBMITTED : (DIRECTOR OF LOCATION & DESIGN DIVISION) | | SCALE NONE |
| APPROVED : (DIRECTOR GENERAL) | | DWG. NO. DS-104 |
| | | SHEET NO. 71 |

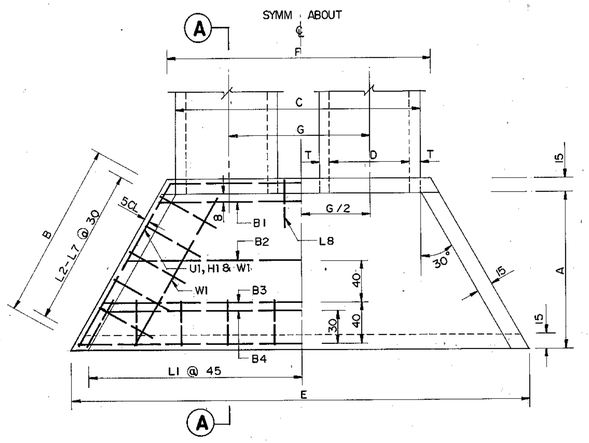


PLAN

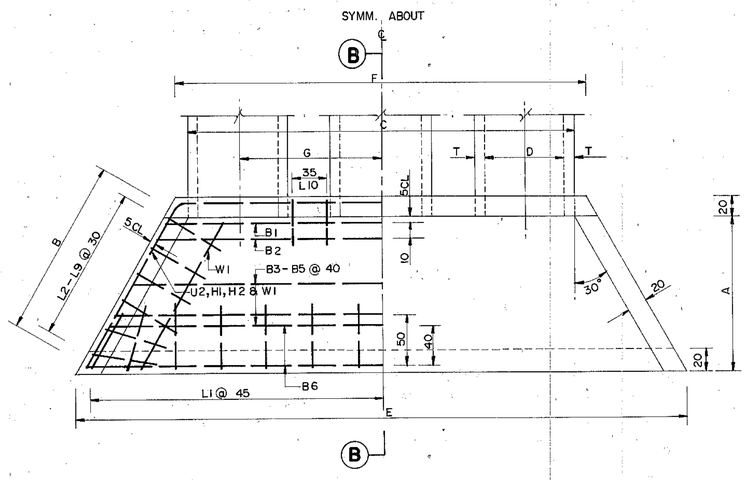


PLAN

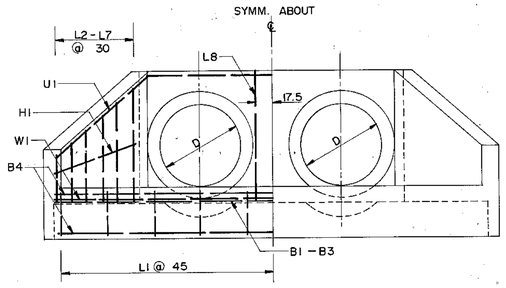


END VIEW

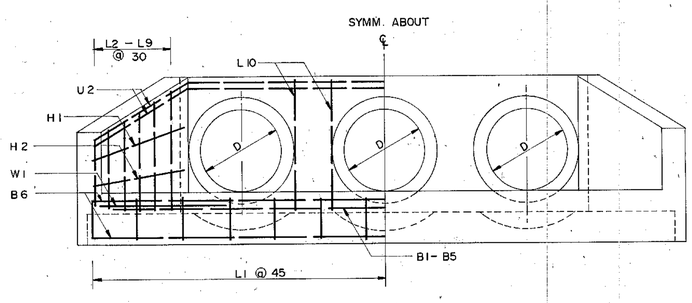


END VIEW

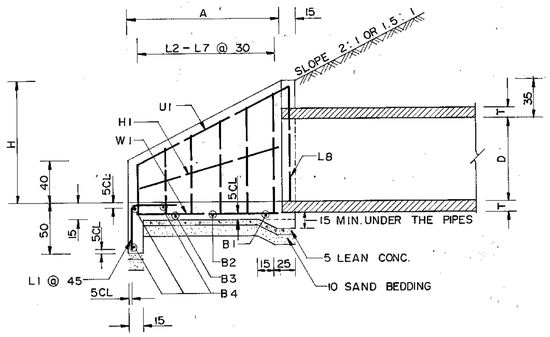


SECTION (A)-(A)

DETAILS FOR Ø50,Ø60 & Ø80 PIPE CULVERTS

NOT TO SCALE

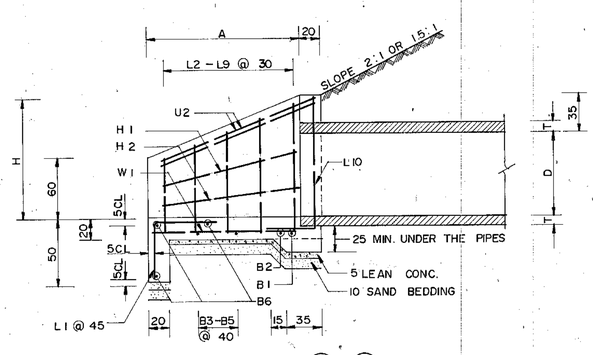


SECTION (B)-(B)

DETAILS FOR Ø100 & Ø120 PIPE CULVERTS

NOT TO SCALE

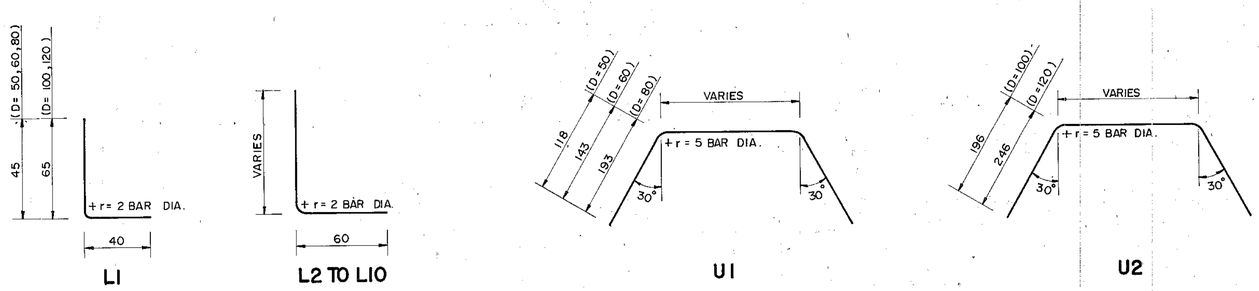


L1 L2 TO L10 U1 U2

BAR BENDING DIAGRAMS

NOT TO SCALE

## TABLE OF DIMENSIONS

| DIA. OF PIPE "D" | T | DIMENSIONS SAME FOR ALL MULTIPLES | | | | | DIMENSIONS | | | | | | | | |
|---|---|---|---|---|---|---|---|---|---|---|---|---|---|---|---|
| | | A | | B | H | G | FOR 2 PIPES | | | FOR 3 PIPES | | | FOR 4 PIPES | | |
| | | S=2:1 | S=1.5:1 | | | | C | E | F | C | E | F | C | E | F |
| 50 | 7 | 90 | 75 | 104 | 85 | 110 | 174 | 313 | 191 | 284 | 423 | 301 | – | – | – |
| 60 | 7.5 | 110 | 90 | 127 | 95 | 120 | 195 | 357 | 212 | 315 | 477 | 332 | – | – | – |
| 80 | 9.5 | 150 | 120 | 173 | 115 | 140 | 239 | 447 | 256 | 379 | 587 | 396 | – | – | – |
| 100 | 11 | 150 | 120 | 173 | 135 | 170 | 292 | 511 | 315 | 462 | 681 | 485 | 632 | 851 | 655 |
| 120 | 12.5 | 190 | 150 | 219 | 155 | 190 | 335 | 601 | 358 | 525 | 781 | 548 | 715 | 981 | 738 |

## TABLE OF REINFORCEMENT FOR Ø50,Ø60,Ø80 CM.

| BAR MARK | SIZE Ø | FOR 2 PIPES | | | | | | FOR 3 PIPES | | | | | |
|---|---|---|---|---|---|---|---|---|---|---|---|---|---|
| | | D=50 | | D=60 | | D=80 | | D=50 | | D=60 | | D=80 | |
| | (M.M.) | NO. | LENGTH | NO. | LENGTH | NO. | LENGTH | NO. | LENGTH | NO. | LENGTH | NO. | LENGTH |
| B1 | 12 | 1 | 202 | 1 | 223 | 1 | 267 | 1 | 312 | 1 | 343 | 1 | 407 |
| B2 | 12 | – | – | 1 | 246 | 1 | 336 | – | – | 1 | 366 | 1 | 476 |
| B3 | 12 | 1 | 248 | 1 | 292 | 1 | 382 | 1 | 358 | 1 | 412 | 1 | 522 |
| B4 | 12 | 3 | – | 3 | – | 3 | – | 3 | – | 3 | – | 3 | – |
| L1 | 12 | 8 | 85 | 9 | 85 | 11 | 85 | 10 | 85 | 11 | 85 | 14 | 85 |
| L2-L7 | 12 | 8 | – | 10 | – | 12 | – | 8 | – | 10 | – | 12 | – |
| L8 | 12 | 2 | 130 | 2 | 160 | 2 | 180 | 4 | 130 | 4 | 160 | 4 | 180 |
| U1 | 12 | 1 | 423 | 1 | 494 | 1 | 638 | 1 | 533 | 1 | 614 | 1 | 778 |
| H1 | 12 | 2 | 99 | 2 | 122 | 2 | 169 | 2 | 99 | 2 | 122 | 2 | 169 |
| W1 | 12 | 4 | 96 | 4 | 119 | 4 | 165 | 4 | 96 | 4 | 119 | 4 | 165 |

## TABLE OF QUANTITIES

| DIA. OF PIPE "D" | T | CONCRETE (1-HDWL.) $M^3$ | | | REINF. BARS, TOTAL WT. (1-HDWL.) KG. | | |
|---|---|---|---|---|---|---|---|
| | | FOR 2 PIPES | FOR 3 PIPES | FOR 4 PIPES | FOR 2 PIPES | FOR 3 PIPES | FOR 4 PIPES |
| 50 | 7 | 0.9 | 1.3 | – | 41 | 51 | – |
| 60 | 7.5 | 1.2 | 1.6 | – | 50 | 63 | – |
| 80 | 9.5 | 1.8 | 2.3 | – | 64 | 79 | – |
| 100 | 11 | 3.0 | 4.0 | 5.0 | 121 | 151 | 181 |
| 120 | 12.5 | 4.0 | 5.3 | 6.6 | 141 | 175 | 208 |

## TABLE OF REINFORCMENT FOR Ø100 & Ø120 CM.

| BAR MARK | SIZE Ø | FOR 2 PIPES | | | | FOR 3 PIPES | | | | FOR 4 PIPES | | | |
|---|---|---|---|---|---|---|---|---|---|---|---|---|---|
| | | D=100 | | D=120 | | D=100 | | D=120 | | D=100 | | D=120 | |
| | (MM.) | NO. | LENGTH | NO. | LENGTH | NO. | LENGTH | NO. | LENGTH | NO. | LENGTH | NO. | LENGTH |
| B1 | 16 | 1 | 332 | 1 | 375 | 1 | 502 | 1 | 565 | 1 | 672 | 1 | 755 |
| B2 | 16 | 1 | 344 | 1 | 387 | 1 | 514 | 1 | 577 | 1 | 384 | 1 | 767 |
| B3 | 12 | 1 | 351 | 1 | 440 | 1 | 521 | 1 | 630 | 1 | 691 | 1 | 820 |
| B4 | 12 | 1 | 398 | 1 | 487 | 1 | 568 | 1 | 677 | 1 | 738 | 1 | 867 |
| B5 | 12 | 1 | 444 | 1 | 533 | 1 | 614 | 1 | 723 | 1 | 784 | 1 | 913 |
| B6 | 12 | 3 | – | 3 | – | 3 | – | 3 | – | 3 | – | 3 | – |
| H1 | 12 | 2 | 177 | 2 | 223 | 2 | 177 | 2 | 223 | 2 | 177 | 2 | 223 |
| H2 | 12 | 2 | 181 | 2 | 235 | 2 | 181 | 2 | 235 | 2 | 181 | 2 | 235 |
| L1 | 12 | 12 | 105 | 14 | 105 | 16 | 105 | 18 | 105 | 20 | 105 | 23 | 105 |
| L2 | 16 | 2 | 132 | 2 | 132 | 2 | 132 | 2 | 132 | 2 | 132 | 2 | 132 |
| L3 | 16 | 2 | 145 | 2 | 145 | 2 | 145 | 2 | 145 | 2 | 145 | 2 | 145 |
| L4 | 16 | 2 | 158 | 2 | 158 | 2 | 158 | 2 | 158 | 2 | 158 | 2 | 158 |
| L5 | 16 | 2 | 171 | 2 | 171 | 2 | 171 | 2 | 171 | 2 | 171 | 2 | 171 |
| L6 | 16 | 2 | 186 | 2 | 186 | 2 | 186 | 2 | 186 | 2 | 186 | 2 | 186 |
| L7 | 16 | 2 | 197 | 2 | 197 | 2 | 197 | 2 | 197 | 2 | 197 | 2 | 197 |
| L8 | 16 | – | – | 2 | 210 | – | – | 2 | 210 | – | – | 2 | 210 |
| L9 | 16 | – | – | 2 | 225 | – | – | 2 | 225 | – | – | 2 | 225 |
| L10 | 16 | 2 | 205 | 2 | 225 | 4 | 205 | 4 | 225 | 6 | 205 | 6 | 225 |
| U2 | 16 | 2 | 705 | 2 | 444 | 2 | 475 | 2 | 1035 | 2 | 162 | 2 | 1228 |
| W1 | 12 | 4 | 165 | 4 | 211 | 4 | 165 | 4 | 211 | 4 | 162 | 4 | 211 |

## NOTES :

1. ALL DIMENSIONS ARE IN CENTIMETERS UNLESS OTHERWISE INDICATED.
2. CONCRETE SHALL HAVE A MINIMUM ULTIMATE COMPRESSIVE STRENGTH OF 210 KSC. FOR 15x15x15 CM. CUBE AT 28 DAY. AN APPROXIMATE MIX. DESIGN PER CUBIC METER IS SUGGESTED AS FOLLOWS :

| | | |
|---|---|---|
| PORTLAND CEMENT TYPE I | 350 | KG. (MIN.) |
| SAND | 0.43 | $M^3$ |
| CRUSHED ROCK OR GRAVEL | 0.86 | $M^3$ |
| CONCRETE SLUMP | 10 | CM. (MAX.) |

3. REINFORCING STEEL SHALL BE DEFORMED BARS CONFORMING TO TIS. 24 GRADE SD 30.
4. DESIGN STRESSES :

| | | | |
|---|---|---|---|
| a) CONCRETE, fc | = | 70 | KSC. |
| b) STEEL , fs | = | 1,400 | KSC. |
| n | = | 10 | |

5. CLEAR CONCRETE COVER SHALL BE 4 CM. UNLESS OTHERWISE INDICATED.
6. LOCATIONS OF LAP SPLICE OF REBARS SHALL BE APPROVED BY THE ENGINEER.
7. LAP LENGTH SHALL NOT BE LESS THAN 24 BAR DIAMETERS.
8. ALL CONCRETE EXPOSED CORNERS SHALL HAVE 2 CM. CHAMFER UNLESS OTHERWISE INDICATED.
9. DIMENSION OF HEADWALL AND QUANTITIES OF MATERIALS SHOWN IN THE TABLES ARE FOR EMBANKMENT SLOPE OF 2:1 ONLY FOR EMBANKMENT SLOPE 1.5 : 1, ALL DIMENSIONS SHALL BE WORKED OUT FROM DIMENSIONS OF "A" AS SHOWN TOGETHER WITH THE FLARE ANGLE OF 30° THEN QUANTITES OF MATERIALS SHALL BE CHANGED ACCORDINGLY.
10. UNLESS OTHERWISE SPECIFIED, THESE HEADWALLS SHALL BE USED FOR HIGHWAYS CLASS D AND CLASS 1.
11. FOR ROLLING AND MOUNTAINOUS TERRAINS, THESE HEADWALLS SHALL BE USED AS NECESSARY.

# KINGDOM OF THAILAND
MINISTRY OF TRANSPORT AND COMMUNICATIONS
DEPARTMENT OF HIGHWAYS

STANDARD DRAWING

R.C. HEADWALL FOR MULTIPLE R.C.P. CULVERT

| | | |
|---|---|---|
| DESIGNED : D.O.H. & CONSULTANTS | CHECKED : | DATE JULY 1994 |
| SUBMITTED : (DIRECTOR OF LOCATION & DESIGN DIVISION) | | SCALE AS SHOWN |
| | | DWG. NO. DS-105 |
| APPROVED : (DIRECTOR GENERAL) | | SHEET NO. 72 |

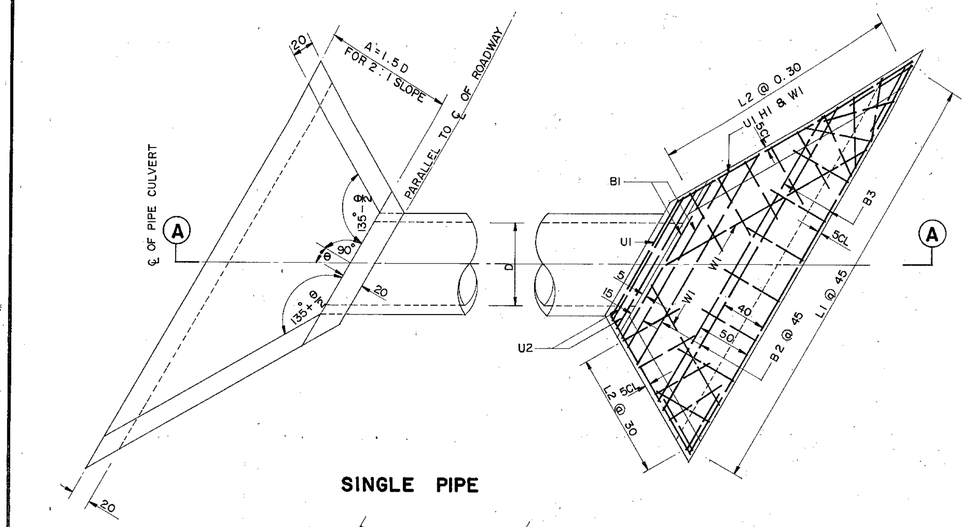


## SINGLE PIPE

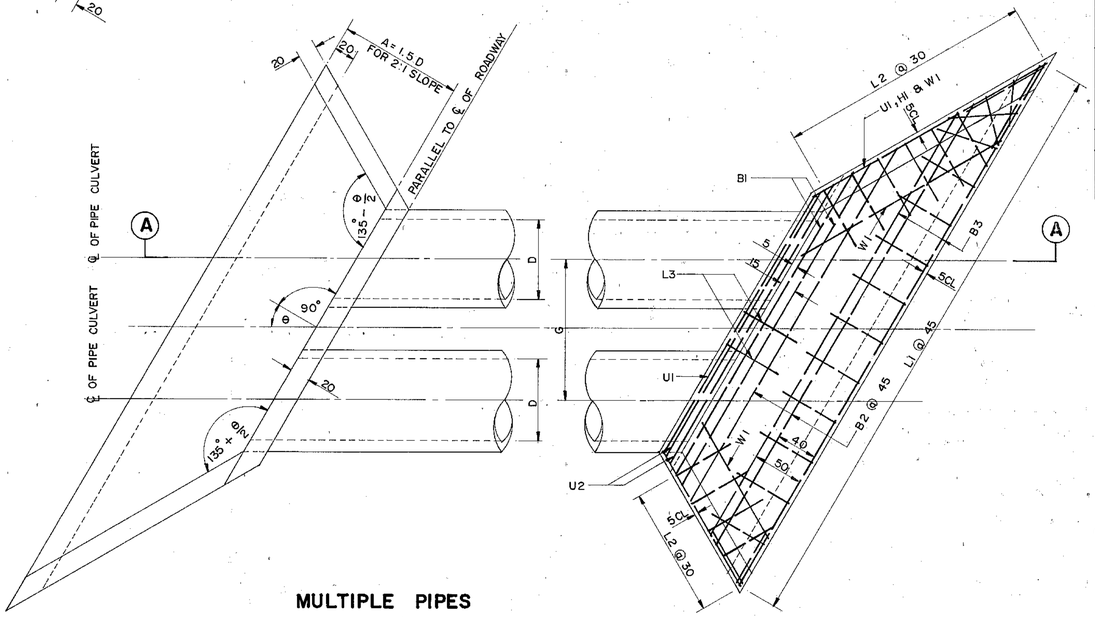


## MULTIPLE PIPES

## PLAN

SCALE 1:30

| TABLE OF REINFORCEMENT FOR D = 80 CM. | | | | | | | | | | | | | | | | | | | | | | | | |
|---|---|---|---|---|---|---|---|---|---|---|---|---|---|---|---|---|---|---|---|---|---|---|---|---|
| BAR MARK | SIZE Ø MM. | @ | FOR 1 PIPE | | | | | | FOR 2 PIPES | | | | | | FOR 3 PIPES | | | | | | FOR 4 PIPES | | | | | |
| | | | SKEW 15° | | SKEW 30° | | SKEW 45° | | SKEW 15° | | SKEW 30° | | SKEW 45° | | SKEW 15° | | SKEW 30° | | SKEW 45° | | SKEW 15° | | SKEW 30° | | SKEW 45° | |
| | | | NO | L | NO | L | NO | L | NO | L | NO | L | NO | L | NO | L | NO | L | NO | L | NO | L | NO | L | NO | L |
| B1 | 16 | – | 2 | – | 2 | – | 2 | – | 2 | – | 2 | – | 2 | – | 2 | – | 2 | – | 2 | – | 2 | – | 2 | – | 2 | – |
| B2 | 16 | 45 | 2 | – | 2 | – | 2 | – | 2 | – | 2 | – | 2 | – | 2 | – | 2 | – | 2 | – | 2 | – | 2 | – | 2 | – |
| B3 | 16 | – | 3 | – | 2 | – | 2 | – | 2 | – | 2 | – | 2 | – | 2 | – | 2 | – | 2 | – | 2 | – | 2 | – | 2 | – |
| H1 | 12 | – | 4 | – | 4 | – | 4 | – | 4 | – | 4 | – | 4 | – | 4 | – | 4 | – | 4 | – | 4 | – | 4 | – | 4 | – |
| L1 | 12 | 45 | 9 | 130 | 11 | 130 | 13 | 130 | 12 | 130 | 14 | 130 | 16 | 130 | 15 | 130 | 18 | 130 | 20 | 130 | 18 | 130 | 22 | 130 | 24 | 130 |
| L2 | 16 | 30 | 13 | – | 14 | – | 16 | – | 13 | – | 14 | – | 16 | – | 13 | – | 14 | – | 16 | – | 13 | – | 14 | – | 16 | – |
| L3 | 16 | – | – | – | – | – | – | – | 2 | 113 | 2 | 113 | 2 | 113 | 4 | 113 | 4 | 113 | 4 | 113 | 6 | 113 | 6 | 113 | 6 | 113 |
| U1 | 16 | – | 2 | 488 | 2 | 144 | 2 | 175 | 2 | 275 | 2 | 306 | 2 | 373 | 2 | 420 | 2 | 468 | 2 | 571 | 2 | 565 | 2 | 630 | 2 | 769 |
| U2 | 16 | – | 2 | 130 | 2 | 531 | 2 | 622 | 2 | 633 | 2 | 693 | 2 | 820 | 2 | 778 | 2 | 855 | 2 | 1018 | 2 | 923 | 2 | 1017 | 2 | 1216 |
| W1 | 12 | – | 4 | – | 4 | – | 4 | – | 4 | – | 4 | – | 4 | – | 4 | – | 4 | – | 4 | – | 4 | – | 4 | – | 4 | – |
| CONC. ($M^3$) | | | 1.74 | | 1.93 | | 2.29 | | 2.45 | | 2.72 | | 3.26 | | 3.16 | | 3.51 | | 4.23 | | 3.87 | | 4.30 | | 5.20 | |
| REINF. (KG.) | | | 99 | | 108 | | 127 | | 129 | | 145 | | 169 | | 159 | | 181 | | 211 | | 190 | | 228 | | 253 | |

| TABLE OF REINFORCEMENT FOR D = 120 CM. | | | | | | | | | | | | | | | | | | | | | | | | |
|---|---|---|---|---|---|---|---|---|---|---|---|---|---|---|---|---|---|---|---|---|---|---|---|---|
| BAR MARK | SIZE Ø MM. | @ | FOR 1 PIPE | | | | | | FOR 2 PIPES | | | | | | FOR 3 PIPES | | | | | | FOR 4 PIPES | | | | | |
| | | | SKEW 15° | | SKEW 30° | | SKEW 45° | | SKEW 15° | | SKEW 30° | | SKEW 45° | | SKEW 15° | | SKEW 30° | | SKEW 45° | | SKEW 15° | | SKEW 30° | | SKEW 45° | |
| | | | NO | L | NO | L | NO | L | NO | L | NO | L | NO | L | NO | L | NO | L | NO | L | NO | L | NO | L | NO | L |
| B1 | 16 | – | 2 | – | 2 | – | 2 | – | 2 | – | 2 | – | 2 | – | 2 | – | 2 | – | 2 | – | 2 | – | 2 | – | 2 | – |
| B2 | 16 | 45 | 3 | – | 3 | – | 3 | – | 3 | – | 3 | – | 3 | – | 3 | – | 3 | – | 3 | – | 3 | – | 3 | – | 3 | – |
| B3 | 16 | – | 2 | – | 2 | – | 2 | – | 2 | – | 2 | – | 2 | – | 2 | – | 2 | – | 2 | – | 2 | – | 2 | – | 2 | – |
| H1 | 12 | – | 6 | – | 6 | – | 6 | – | 6 | – | 6 | – | 6 | – | 6 | – | 6 | – | 6 | – | 6 | – | 6 | – | 6 | – |
| L1 | 12 | 45 | 13 | 130 | 14 | 130 | 17 | 130 | 17 | 130 | 19 | 130 | 23 | 130 | 21 | 130 | 24 | 130 | 29 | 130 | 25 | 130 | 29 | 130 | 35 | 130 |
| L2 | 16 | 30 | 18 | – | 19 | – | 23 | – | 18 | – | 19 | – | 23 | – | 18 | – | 19 | – | 23 | – | 18 | – | 19 | – | 23 | – |
| L3 | 16 | – | – | – | – | – | – | – | 2 | 158 | 2 | 158 | 2 | 158 | 4 | 158 | 4 | 158 | 4 | 158 | 6 | 158 | 6 | 158 | 6 | 158 |
| U1 | 16 | – | 2 | 721 | 2 | 783 | 2 | 919 | 2 | 918 | 2 | 1002 | 2 | 1188 | 2 | 1115 | 2 | 1221 | 2 | 1457 | 2 | 1312 | 2 | 1440 | 2 | 1726 |
| U2 | 16 | – | 2 | 179 | 2 | 200 | 2 | 244 | 2 | 376 | 2 | 419 | 2 | 513 | 2 | 573 | 2 | 638 | 2 | 782 | 2 | 770 | 2 | 857 | 2 | 1051 |
| W1 | 12 | – | 4 | – | 4 | – | 4 | – | 4 | – | 4 | – | 4 | – | 4 | – | 4 | – | 4 | – | 4 | – | 4 | – | 4 | – |
| CONC. ($M^3$) | | | 3.34 | | 3.66 | | 4.38 | | 4.58 | | 5.04 | | 6.07 | | 5.82 | | 6.42 | | 7.76 | | 7.06 | | 7.80 | | 9.45 | |
| REINF. (KG.) | | | 162 | | 174 | | 210 | | 209 | | 225 | | 273 | | 256 | | 276 | | 335 | | 303 | | 328 | | 397 | |

| TABLE OF REINFORCEMENT FOR D = 100 CM. | | | | | | | | | | | | | | | | | | | | | | | | |
|---|---|---|---|---|---|---|---|---|---|---|---|---|---|---|---|---|---|---|---|---|---|---|---|---|
| BAR MARK | SIZE Ø MM. | @ | FOR 1 PIPE | | | | | | FOR 2 PIPES | | | | | | FOR 3 PIPES | | | | | | FOR 4 PIPES | | | | | |
| | | | SKEW 15° | | SKEW 30° | | SKEW 45° | | SKEW 15° | | SKEW 30° | | SKEW 45° | | SKEW 15° | | SKEW 30° | | SKEW 45° | | SKEW 15° | | SKEW 30° | | SKEW 45° | |
| | | | NO | L | NO | L | NO | L | NO | L | NO | L | NO | L | NO | L | NO | L | NO | L | NO | L | NO | L | NO | L |
| B1 | 16 | – | 2 | – | 2 | – | 2 | – | 2 | – | 2 | – | 2 | – | 2 | – | 2 | – | 2 | – | 2 | – | 2 | – | 2 | – |
| B2 | 16 | 45 | 2 | – | 2 | – | 2 | – | 2 | – | 2 | – | 2 | – | 2 | – | 2 | – | 2 | – | 2 | – | 2 | – | 2 | – |
| B3 | 16 | – | 3 | – | 2 | – | 2 | – | 2 | – | 2 | – | 2 | – | 2 | – | 2 | – | 2 | – | 2 | – | 2 | – | 2 | – |
| H1 | 12 | – | 4 | – | 4 | – | 4 | – | 4 | – | 4 | – | 4 | – | 4 | – | 4 | – | 4 | – | 4 | – | 4 | – | 4 | – |
| L1 | 12 | 45 | 11 | 130 | 12 | 130 | 14 | 130 | 15 | 130 | 16 | 130 | 19 | 130 | 19 | 130 | 20 | 130 | 24 | 130 | 23 | 130 | 24 | 130 | 29 | 130 |
| L2 | 16 | 30 | 16 | – | 16 | – | 20 | – | 16 | – | 16 | – | 20 | – | 16 | – | 16 | – | 20 | – | 16 | – | 16 | – | 20 | – |
| L3 | 16 | – | – | – | – | – | – | – | 2 | 135 | 2 | 135 | 2 | 135 | 4 | 135 | 4 | 135 | 4 | 135 | 6 | 135 | 6 | 135 | 6 | 135 |
| U1 | 16 | – | 2 | 574 | 2 | 648 | 2 | 761 | 2 | 744 | 2 | 837 | 2 | 993 | 2 | 914 | 2 | 1026 | 2 | 1225 | 2 | 1084 | 2 | 1215 | 2 | 1457 |
| U2 | 16 | – | 2 | 120 | 2 | 166 | 2 | 206 | 2 | 290 | 2 | 355 | 2 | 438 | 2 | 460 | 2 | 544 | 2 | 670 | 2 | 630 | 2 | 733 | 2 | 902 |
| W1 | 12 | – | 4 | – | 4 | – | 4 | – | 4 | – | 4 | – | 4 | – | 4 | – | 4 | – | 4 | – | 4 | – | 4 | – | 4 | – |
| CONC. ($M^3$) | | | 2.49 | | 2.70 | | 3.23 | | 3.45 | | 3.76 | | 4.53 | | 4.41 | | 4.82 | | 5.83 | | 5.37 | | 5.88 | | 7.13 | |
| REINF. (KG.) | | | 124 | | 134 | | 163 | | 162 | | 175 | | 214 | | 199 | | 216 | | 266 | | 237 | | 257 | | 317 | |

| TABLE OF REINFORCEMENT FOR D = 150 CM. | | | | | | | | | | | | | | | | | | | | | | | | |
|---|---|---|---|---|---|---|---|---|---|---|---|---|---|---|---|---|---|---|---|---|---|---|---|---|
| BAR MARK | SIZE Ø MM. | @ | FOR 1 PIPE | | | | | | FOR 2 PIPES | | | | | | FOR 3 PIPES | | | | | | FOR 4 PIPES | | | | | |
| | | | SKEW 15° | | SKEW 30° | | SKEW 45° | | SKEW 15° | | SKEW 30° | | SKEW 45° | | SKEW 15° | | SKEW 30° | | SKEW 45° | | SKEW 15° | | SKEW 30° | | SKEW 45° | |
| | | | NO | L | NO | L | NO | L | NO | L | NO | L | NO | L | NO | L | NO | L | NO | L | NO | L | NO | L | NO | L |
| B1 | 16 | – | 2 | – | 2 | – | 2 | – | 2 | – | 2 | – | 2 | – | 2 | – | 2 | – | 2 | – | 2 | – | 2 | – | 2 | – |
| B2 | 16 | 45 | 4 | – | 4 | – | 4 | – | 4 | – | 4 | – | 4 | – | 4 | – | 4 | – | 4 | – | 4 | – | 4 | – | 4 | – |
| B3 | 16 | – | 2 | – | 2 | – | 2 | – | 2 | – | 2 | – | 2 | – | 2 | – | 2 | – | 2 | – | 2 | – | 2 | – | 2 | – |
| H1 | 12 | – | 6 | – | 6 | – | 6 | – | 6 | – | 6 | – | 6 | – | 6 | – | 6 | – | 6 | – | 6 | – | 6 | – | 6 | – |
| L1 | 12 | 45 | 16 | 130 | 17 | 130 | 21 | 130 | 21 | 130 | 23 | 130 | 28 | 130 | 26 | 130 | 29 | 130 | 35 | 130 | 31 | 130 | 35 | 130 | 42 | 130 |
| L2 | 16 | 30 | 23 | – | 24 | – | 29 | – | 23 | – | 24 | – | 29 | – | 23 | – | 24 | – | 29 | – | 23 | – | 24 | – | 29 | – |
| L3 | 16 | – | – | – | – | – | – | – | 2 | 190 | 2 | 190 | 2 | 190 | 4 | 190 | 4 | 190 | 4 | 190 | 6 | 190 | 6 | 190 | 6 | 190 |
| U1 | 16 | – | 2 | 892 | 2 | 974 | 2 | 1146 | 2 | 1125 | 2 | 1234 | 2 | 1464 | 2 | 1358 | 2 | 1494 | 2 | 1782 | 2 | 1591 | 2 | 1754 | 2 | 2100 |
| U2 | 16 | – | 2 | 214 | 2 | 240 | 2 | 290 | 2 | 447 | 2 | 500 | 2 | 608 | 2 | 680 | 2 | 760 | 2 | 926 | 2 | 913 | 2 | 1020 | 2 | 1244 |
| W1 | 12 | – | 4 | – | 4 | – | 4 | – | 4 | – | 4 | – | 4 | – | 4 | – | 4 | – | 4 | – | 4 | – | 4 | – | 4 | – |
| CONC. ($M^3$) | | | 4.81 | | 5.28 | | 6.36 | | 6.52 | | 7.19 | | 8.68 | | 8.23 | | 9.10 | | 11.02 | | 9.94 | | 11.01 | | 13.35 | |
| REINF. (KG) | | | 216 | | 237 | | 280 | | 275 | | 299 | | 359 | | 335 | | 365 | | 438 | | 394 | | 431 | | 517 | |

| INSIDE DIA. OF PIPE "D" | DIMENSION | |
|---|---|---|
| | C | G |
| 80 | 103 | 140 |
| 100 | 125 | 164 |
| 120 | 148 | 190 |
| 150 | 180 | 225 |

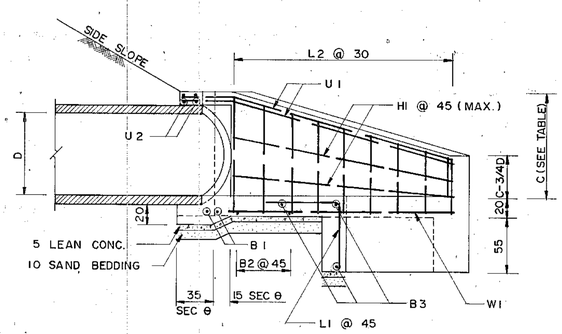


## SECTION (A)-(A)

SCALE 1:30

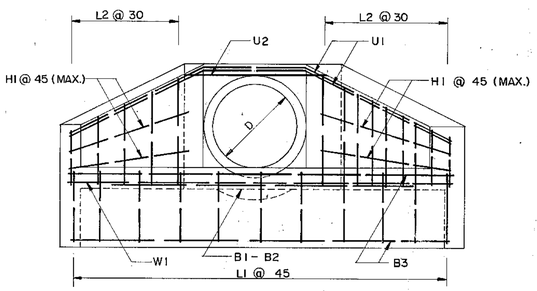


## SINGLE PIPE

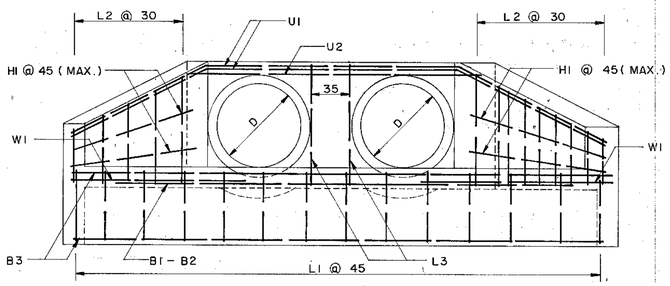


## MULTIPLE PIPES

## END VIEWS

SCALE 1 : 30

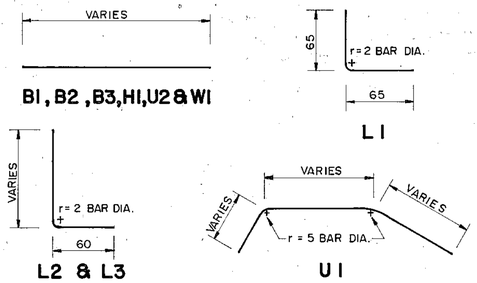


## BAR BENDING DIAGRAMS

NOT TO SCALE

## NOTES :

1. ALL DIMENSIONS ARE IN CENTIMETERS UNLESS OTHERWISE INDICATED.
2. CONCRETE SHALL HAVE A MINIMUM ULTIMATE COMPRESSIVE STRENGTH OF 210 KSC. FOR 15 x 15 x 15 CM. CUBE AT 28 DAYS. AN APPROXIMATE MIX DESIGN PER CUBIC METER IS SUGGESTED AS FOLLOWS :

| | | |
|---|---|---|
| PORTLAND CEMENT TYPE 1 | 350 | KG. ( MIN. ) |
| SAND | 0.43 | $M^3$ |
| CRUSHED ROCK OR GRAVEL | 0.86 | $M^3$ |
| CONCRETE SLUMP | 10 | CM. ( MAX.) |

3. REINFROCING STEEL SHALL BE DEFORMED BARS CONFORMING TO TIS. 24 GRADE SD 30.
4. DESING STRESSES
   a) CONCRETE , fc = 70 KSC.
   b) STEEL , fs = 1,400 KSC.
   n = 10
5. CLEAR CONCRETE COVER SHALL BE 4 CM. UNLESS OTHERWISE INDICATED.
6. LOCATIONS OF LAP SPLICE OF REBARS SHALL BE APPROVED BY THE ENGINEER.
7. LAP LENGTH SHALL NOT BE LESS THAN 24 BAR DIAMETERS.
8. ALL CONCRETE EXPOSED CORNERS SHALL HAVE 2 CM. CHAMFERS UNLESS OTHERWISE INDICATED.
9. DIMENSIONS OF HEADWALL AND QUANTITIES OF MATERIAL SHOWN IN TABLES ARE FOR EMBANKMENT SLOPE OF 2:1 ONLY FOR EMBANKMENT SLOPE OF 1.5 : 1, ALL DIMENSIONS SHALL BE WORKED OUT FROM DIMENSIONS OF "A" = 1.2 D.
10. THE SKEW ANGLE (θ) AS SHOWN ON THIS DRAWING SHALL NOT EXCEED 45°.
11. WALL AND SLAB THICKNESSES SHALL BE 20 CM. FOR ALL SKEWED HEADWALLS. THERE WILL BE NO SKEWED HEADWALLS FOR PIPES LESS THAN 80 CM. DIA.
12. UNLESS OTHERWISE SPECIFIED, THESE HEADWALLS SHALL BE USED FOR HIGHWAYS CLASS D AND CLASS 1.
13. FOR ROLLING AND MOUNTAINOUS TERRAINS, THESE HEADWALLS SHALL BE USED AS NECESSARY.

# KINGDOM OF THAILAND
## MINISTRY OF TRANSPORT AND COMMUNICATIONS
## DEPARTMENT OF HIGHWAYS

STANDARD DRAWING

R.C. HEADWALL FOR SKEW R.C.P. CULVERT

| | | |
|---|---|---|
| DESIGNED : D.O.H. & CONSULTANTS | CHECKED : | DATE JULY 1994 |
| SUBMITTED : (DIRECTOR OF LOCATION & DESIGN DIVISION) | | SCALE AS SHOWN |
| | | DWG. NO. DS-106 |
| APPROVED : (DIRECTOR GENERAL) | | SHEET NO. 73 |

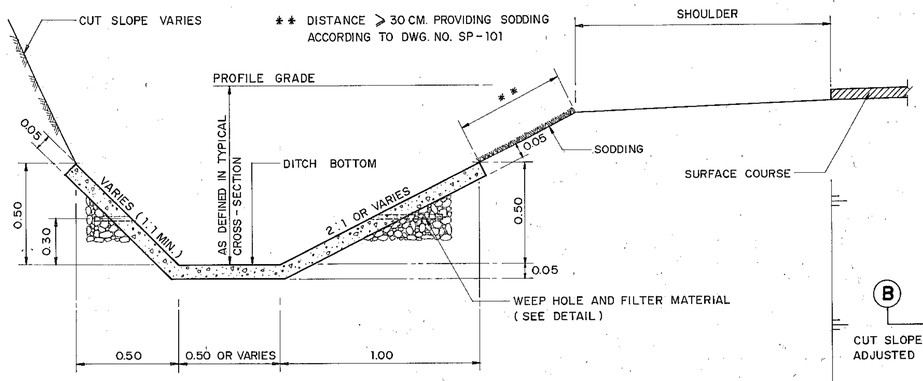


## TYPE I PLAIN CONCRETE DITCH LINING

NOT TO SCALE

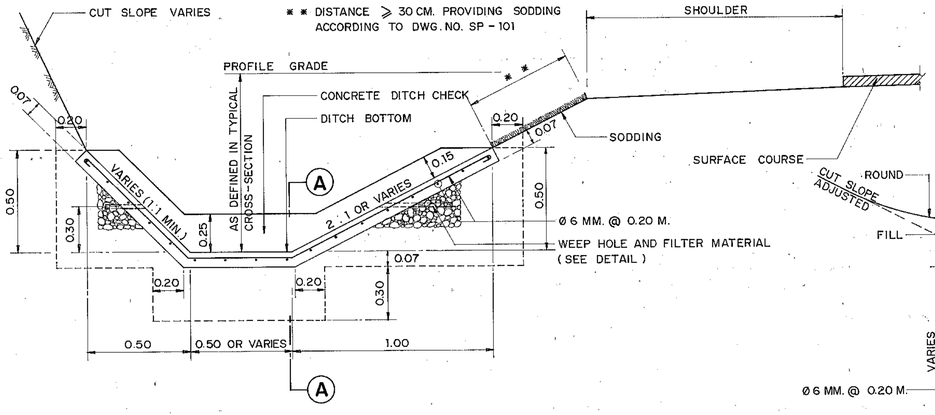


## TYPE II REINFORCED CONCRETE DITCH LINING

NOT TO SCALE

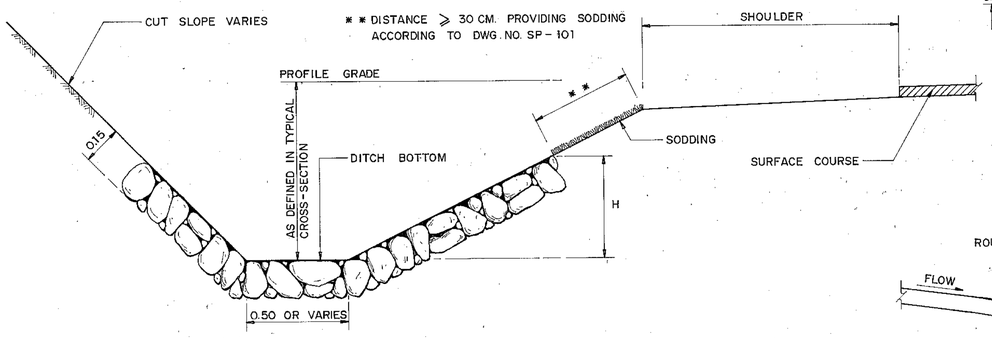


## TYPE III MORTAR RIP-RAP DITCH LINING

NOT TO SCALE

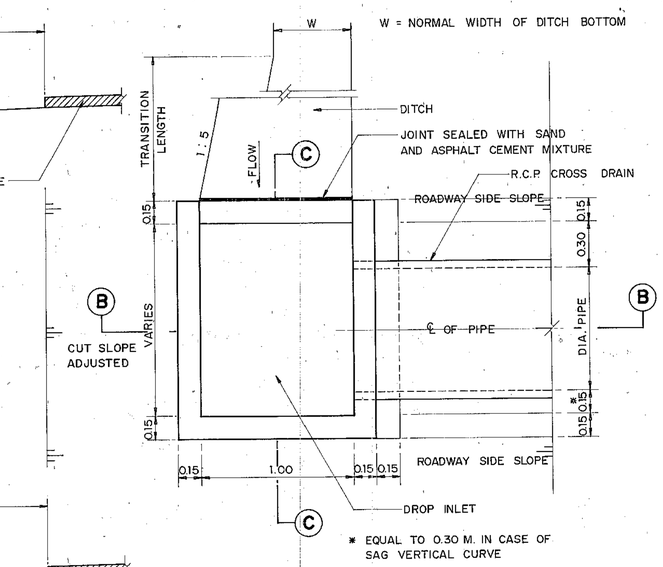


## PLAN VIEW OF DROP INLET

NOT TO SCALE

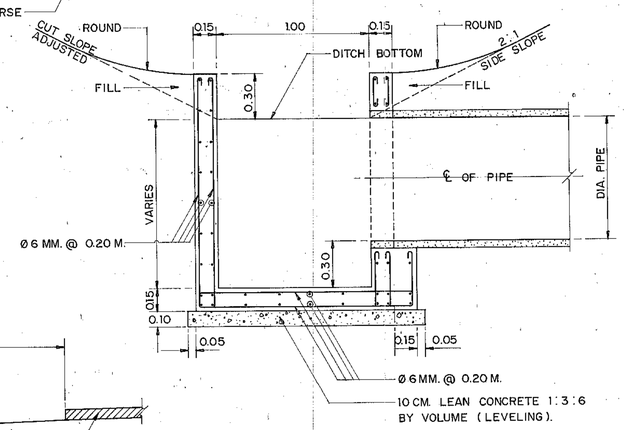


## SIDE ELEVATION VIEW

## SECTION (B)-(B)

NOT TO SCALE

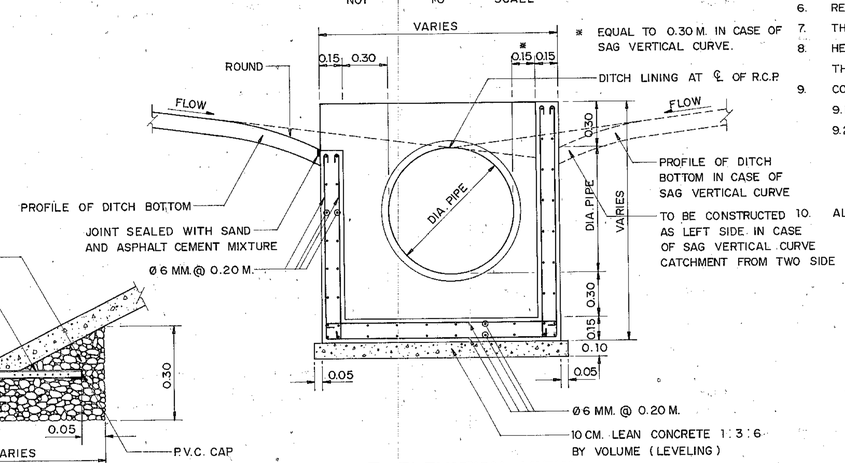


## FRONT ELEVATION VIEW

## SECTION (C)-(C)

NOT TO SCALE

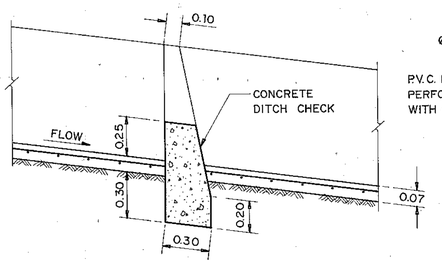


## SECTION (A)-(A)

SCALE 1 : 20

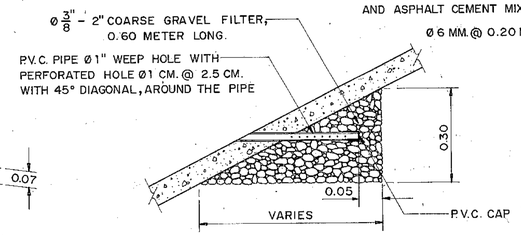


## DETAIL OF WEEP HOLE AND FILTER MATERIAL

SCALE 1 : 10

# CONSTRUCTION DETAILS

## TYPE I, TYPE II CONCRETE DITCH LINING

1.1 THE EXISTING DITCH OR CHANNEL SHALL BE EXCAVATED AND SHAPED IN ACCORDANCE WITH THE DRAWINGS AND THE GROUND SHALL BE COMPACTED PROPERLY. THE DITCH GRADIENT SHALL BE THE SAME OR SIMILAR TO THE ROADWAY GRADIENT.

1.2 CONCRETE MIX SHALL BE 1:2:4 BY VOLUME. CONCRETE SLUMP TEST SHALL NOT EXCEED 10 CM.

1.3 BEFORE PLACING CONCRETE, THE AREA SHALL BE THROUGHLY MOISTENED WITH WATER TO ATTAIN OPTIMUM MOISTURE. CONCRETE SHALL BE PLACED IN SECTIONS OF 1.00 M. MAXIMUM IN LENGTH FOR TYPE I AND 3.00 M. MAXIMUM FOR TYPE II. THE JOINT WIDTH BETWEEN SECTIONS SHALL NOT EXCEED 1 CM. AND THE JOINTS SHALL BE SEALED WITH SAND ASPHALT CEMENT WITH 4:1 MIXTURE RATIO.

1.4 REINFORCING STEEL SHALL BE PLAIN ROUND BARS CONFORMING TO TIS. 20 GRADE SR.24. LAPPING FOR Ø 6 MM. REINFORCING STEEL SHALL BE 25 CM. MINIMUM.

1.5 REINFORCING STEEL SHALL ALSO BE WELDED WIRE FABRIC WITH THE SPECIFICATIONS AS FOLLOWS;

- 1.5.1 SPECIFICATION SHALL CONFORM TO AASHTO DESIGNATION M.55-75 (ASTM DESIGNATION A 185-73) AND AASHTO DESIGNATION M.32-78 (ASTM DESIGNATION A 82-76)
- 1.5.2 LAPPED SPLICES OF WELDED WIRE FABRIC IS 15 CM. MINIMUM.
- 1.5.3 MESH SIZE OF THE WIRE FABRIC IS 2"x2"
- 1.5.4 THE QUANTITIES OF THE WELDED WIRE FABRIC CALCULATED FROM NOMINAL AREA MUST BE AT LEAST 0.730 $CM^2$/M. (IN EACH DIRECTION) AND THE WELDED WIRE FABRIC SHALL BE SMOOTH AND THE WELDED JOINT SHALL NOT LOOSE OVER 1% WHILE PLACING FOR CONSTRUCTION OF CONCRETE DITCH LINING.
- 1.5.5 CONCRETE SHALL BE CURED AFTER PLACING.

## TYPE III MORTAR RIP-RAP DITCH LINING

2.1 THE METHOD OF CONSTRUCTION SHALL BE THE SAME AS IN NO. 1.1

2.2 THE STONES USED FOR RIP-RAP DITCH LINING SHALL WEIGH 20-45 KG. EACH AND AT LEAST 50% SHALL WEIGH MORE THAN 35 KG. STONES SHALL HAVE SUCH SHAPE AND DIMENSIONS AS TO MINIMIZE THE INTERSPLICES AFTER PLACING. THE THICKNESS OF THE STONES SHALL BE APPROXIMATELY 15 CM.

2.3 THE LARGER STONES SHALL BE PLACED FIRST AND THE INTERSPLICES SHALL BE FILLED WITH SPALLS OR SMALL STONES UNTIL A SMOOTH SURFACE IS OBTAINED. FRESH MORTAR SHALL THEN BE APPLIED TO SEAL ALL JOINTS.

2.4 THE DEPTH OF THE DITCH (H) SHALL BE DEFINED AS FOLLOWS;

| ROADWAY GRADIENT (%) | H (CM.) |
|---|---|
| 2.00 — 2.70 | 60 |
| 2.70 — 3.70 | 50 |
| OVER 3.70 | 45 |

# NOTES:

1. THE THREE TYPES OF DITCH LINING SHALL BE CONSTRUCTED IN THE AREA OF RAINFALL INTENSITY NOT OVER 10 IN./HR. IN CASE OF RAINFALL INTENSITY IS OVER 10 IN./HR., DITCH LINING SHALL BE DESIGNED BY THE ENGINEER.
2. DITCH LINING SHALL BE CONSTRUCTED BY CONSIDERATION OF THE SOIL CONDITION, EROSION AND THE DISCHARGE IN THE DITCH. GENERALLY, DITCH LINING SHALL BE CONSTRUCTED IF ROADWAY GRADE EXCEEDS 6%
3. DROP INLET SHALL BE CONSTRUCTED IN THE LONG AND STEEP SIDE DITCH OR SIDE DITCH ALONG CIRCULAR CURVE AND THE HIGH CUT GRADIENT IN WHICH THE WATER CAN BE DRAINED TO THE OTHER SIDE OF THE ROADWAY OR AT THE LOWEST POINT OF THE SIDE DITCH IN THE SAG VERTICAL CURVE.
4. THE SIZE OF THE R.C. PIPE CULVERT INSTALLED AT THE DROP INLET SHALL BE SELECTED SUITABLY IN THE FIELD. GENERALLY THE R.C. PIPE CULVERT SHALL BE Ø 0.80 M.
5. CONCRETE FOR THE DROP INLET SHALL HAVE A MINIMUM ULTIMATE COMPRESSIVE STRENGTH OF 210 KSC. FOR 15x15x15 CM. CUBE AT 28 DAYS. AN APPROXIMATE MIX DESIGN PER CUBIC METER IS SUGGESTED AS FOLLOWS;

| | |
|---|---|
| PORTLAND CEMENT TYPE 1. | 350 KG. (MIN.) |
| SAND | 0.43 $M^3$ |
| CRUSHED ROCK OR GRAVEL | 0.86 $M^3$ |
| CONCRETE SLUMP | 10 CM. (MAX.) |

6. REINFORCING STEEL FOR THE DROP INLET SHALL CONFORM TO TIS. 20 GRADE SR 24 WITH A CLEAR COVER OF 2.5 CM.
7. THE QUANTITIES OF THE DROP INLET SHALL INCLUDE TAPERED LENGTH OF THE SIDE DITCH TO THE DROP INLET.
8. HEAD WALL SHALL BE CONSTRUCTED AT THE OUTLET OF THE R.C. PIPE CULVERT. WHEN THE OUTLET END OF THE DRAIN PIPE IS NOT AT THE TOE OF SLOPE, R.C. DRAIN CHUTE SHALL BE CONSTRUCTED.
9. CONCRETE DITCH CHECK:
   - 9.1 CONCRETE MIX. SHALL BE 1:2:4 BY VOLUME. CONCRETE SLUMP TEST SHALL NOT EXCEED 10 CM.
   - 9.2 CONCRETE DITCH CHECK SHALL BE CONSTRUCTED FOR TYPE II AND TYPE III OF THE LINING GENERALLY THE SPACING OF DITCH CHECK SHALL NOT EXCEED 150 M., 120 M., 100 M. AND 80 M. FOR ROADWAY GRADE OF 6%, 8%, 10% AND 12% RESPECTIVELY, BUT THE LOCATION SHALL SUITABLY BE CONSIDERED IN THE FIELD AND BY THE APPROVAL OF THE ENGINEER FOR THE PARTICULAR TYPE OF TERRAINS.

ALL DIMENSIONS ARE IN METERS UNLESS OTHERWISE INDICATED.

**KINGDOM OF THAILAND**
**MINISTRY OF TRANSPORT AND COMMUNICATIONS**
**DEPARTMENT OF HIGHWAYS**

STANDARD DRAWING

SIDE DITCH LINING & DROP INLET CROSS DRAIN

| | | |
|---|---|---|
| DESIGNED: D.O.H. & CONSULTANTS | CHECKED: | DATE JULY 1994 |
| SUBMITTED: (DIRECTOR OF LOCATION & DESIGN DIVISION) | | SCALE AS SHOWN |
| APPROVED: (DIRECTOR GENERAL) | | DWG. NO. DS-201 |
| | | SHEET NO. 74 |

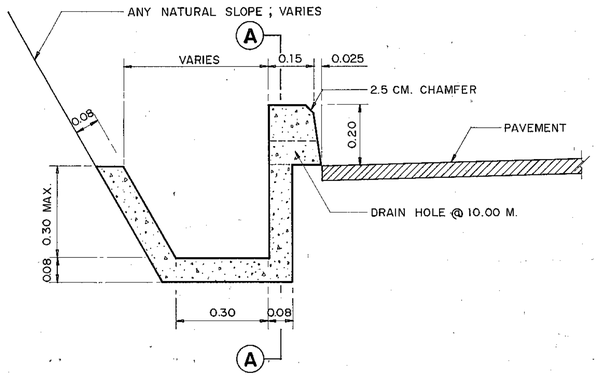


## CONCRETE DITCH TYPE "A"
SCALE 1 : 10

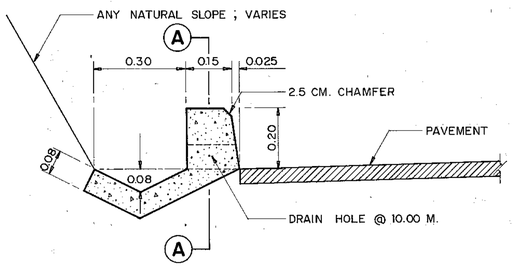


## CONCRETE DITCH TYPE "B"
SCALE 1 : 10

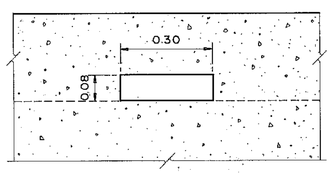


## SECTION (A)-(A)
SCALE 1 : 10

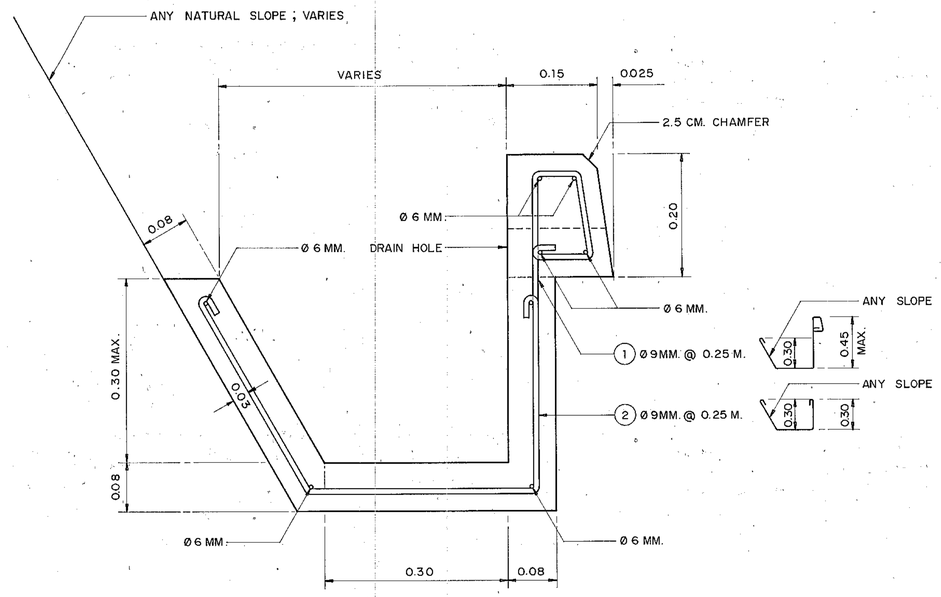


## CONCRETE DITCH TYPE "A"
SCALE 1 : 5

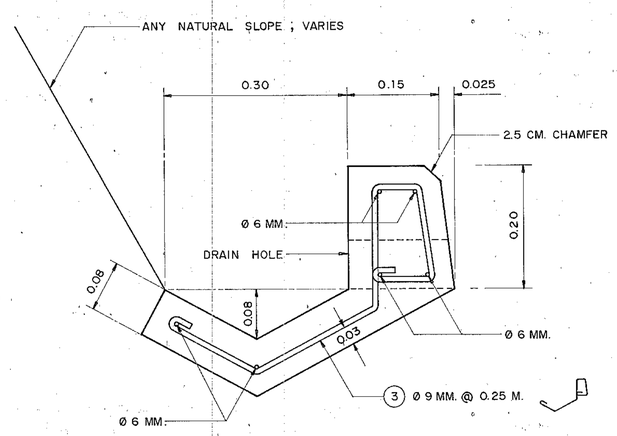


## CONCRETE DITCH TYPE "B"
SCALE 1 : 5

## NOTES :

1. ALL DIMENSIONS ARE IN METERS UNLESS OTHERWISE INDICATED.
2. CONCRETE SHALL HAVE A MINIMUM ULTIMATE COMPRESSIVE STRENGTH OF 180 KSC. FOR 15 x 15 x 15 CM. CUBE AT 28 DAYS. AN APPROXIMATE MIX DESIGN PER CUBIC METER IS SUGGESTED AS FOLLOWS :

| | |
|---|---|
| PORTLAND CEMENT | 320 KG. (MIN.) |
| SAND | 0.43 $M^3$ |
| CRUSHED ROCK OR GRAVEL | 0.86 $M^3$ |
| CONCRETE SLUMP | 10 CM. (MAX.) |

3. REINFORCING STEEL SHALL CONFORMED TO TIS. 20 GRADE SR 24.
4. CLEAR CONCRETE COVER SHALL BE 3 CM.
5. IN CASE OF LAPPED SPLICES OF THE REINFORCEMENT THE LAPPED DISTANCE MUST NOT BE LESS THAN 40 TIMES OF THE DIAMETER OF THE REINFORCING STEEL OR AS DIRECTED BY THE ENGINEER.
6. ALL OF THE CONSTRUCTION MATERIALS MUST CONFORMED TO D.O.H. STANDARDS.
7. EXPANSION JOINT OF 1 CM. WIDTH MUST BE PROVIDED AT THE INTERVAL OF 10 METERS AND FILLED WITH MORTAR (1:3 BY VOLUME)

# KINGDOM OF THAILAND
MINISTRY OF TRANSPORT AND COMMUNICATIONS
DEPARTMENT OF HIGHWAYS

STANDARD DRAWING

CONCRETE DITCH AT HILLSIDE

| | | |
|---|---|---|
| DESIGNED : D.O.H. & CONSULTANTS | CHECKED : | DATE JULY 1994 |
| SUBMITTED : (DIRECTOR OF LOCATION & DESIGN DIVISION) | | SCALE AS SHOWN |
| | | DWG. NO. DS-202 |
| APPROVED : (DIRECTOR GENERAL) | | SHEET NO. 75 |

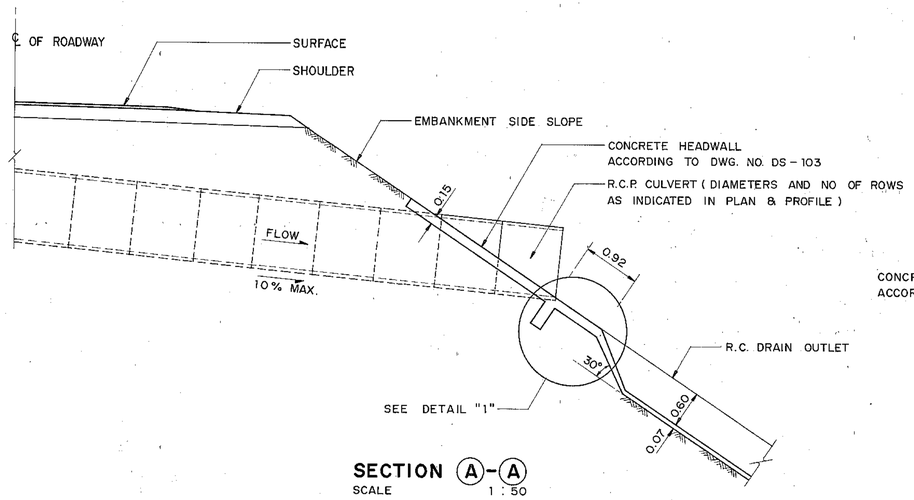


## SECTION (A)-(A)
SCALE 1 : 50

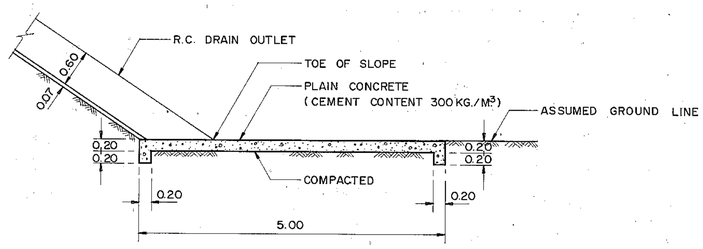


## SECTION (B)-(B)
SCALE 1 : 50

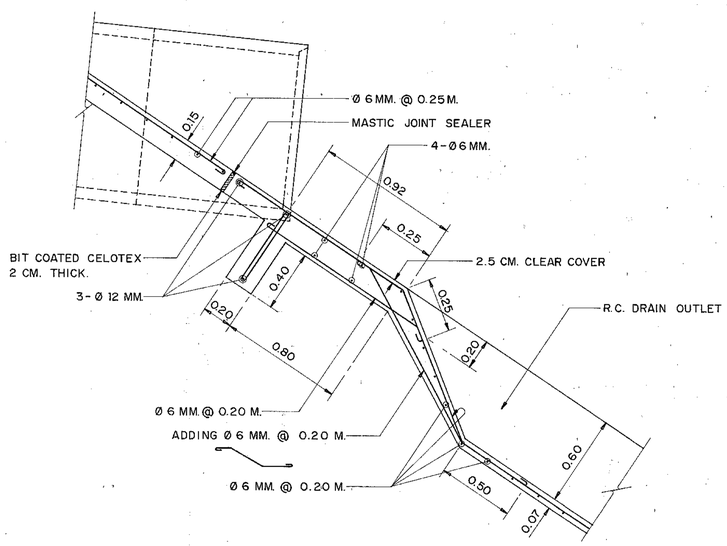


## DETAIL " 1 "
SCALE 1 : 20

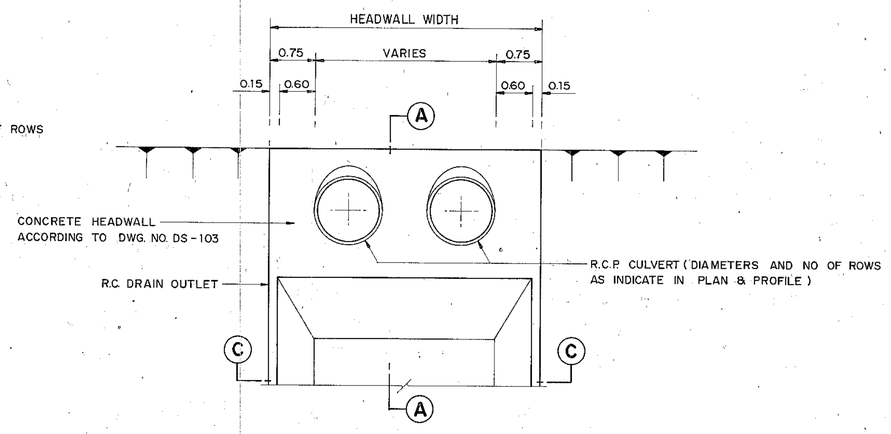


## FRONT OF R.C. DRAIN OUTLET
SCALE 1 : 50

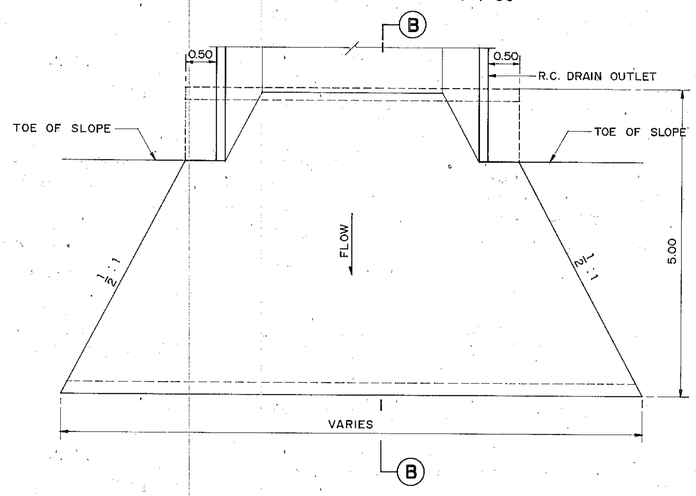


## R.C. DRAIN OUTLET PLAN
SCALE 1 : 50

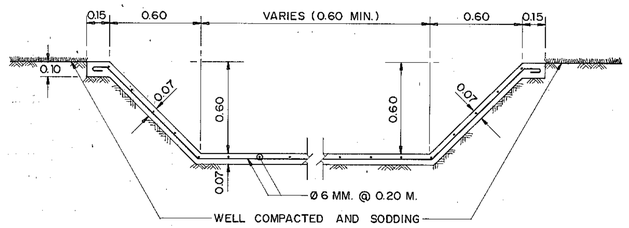


## SECTION (C)-(C)
SCALE 1 : 20

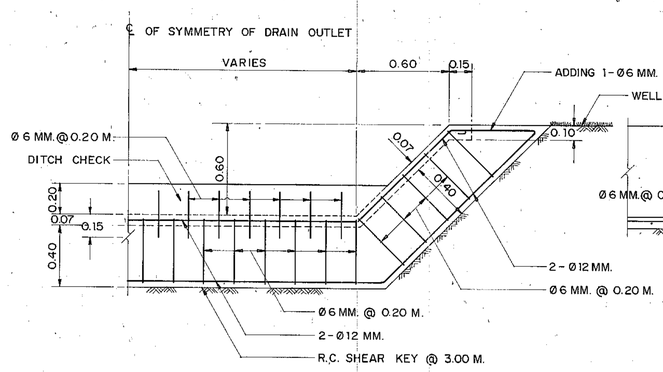


## SECTION DRAIN OUTLET AT SHEAR KEY
SCALE 1 : 20

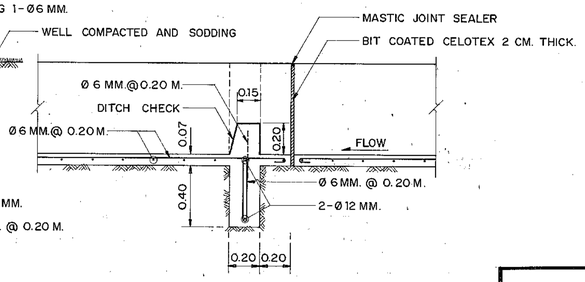


## SECTION DRAIN OUTLET LONGITUDINAL JOINT AND SHEAR KEY
SCALE 1 : 20

## NOTES :

1. ALL DIMENSIONS ARE IN METERS UNLESS OTHERWISE INDICATED.
2. WHERE THE HEIGHT OF R.C.P. OUTLET IS 4.00 M. ABOVE THE TOE OF SLOPE AND MAY CAUSE SIDE SLOPE EROSION, THE R.C. DRAIN OUTLET SHALL BE PROVIDED OR AS DIRECTED BY THE ENGINEER.
3. THE EMBANKMENT SLOPE SHALL BE WELL COMPACTED AND SHAPED TO THE LINE AND GRADE SHOWN ON THE PLANS.
4. CONCRETE SHALL HAVE A MINIMUM ULTIMATE COMPRESSIVE STRENGTH OF 180 KSC. FOR 15 x 15 x 15 CM. CUBE AT 28 DAYS. AN APPROXIMATE MIX DESIGN PER CUBIC METER IS SUGGESTED AS FOLLOWS :

| | | |
|---|---|---|
| PORTLAND CEMENT TYPE 1 | 320 | KG. ( MIN. ) |
| SAND | 0.43 | M.³ |
| CRUSHED ROCK OR GRAVEL | 0.86 | M.³ |
| CONCRETE SLUMP | 10 | CM. (MAX.) |

5. REINFORCING STEEL SHALL CONFORM TO TIS. 20 GRADE SR 24.

# KINGDOM OF THAILAND
MINISTRY OF TRANSPORT AND COMMUNICATIONS
DEPARTMENT OF HIGHWAYS

STANDARD DRAWING

R.C. DRAIN OUTLET FOR R.C.P. CULVERT

| | | |
|---|---|---|
| DESIGNED : D.O.H. & CONSULTANTS | CHECKED : | DATE JULY 1994 |
| SUBMITTED : (DIRECTOR OF LOCATION & DESIGN DIVISION) | | SCALE AS SHOWN |
| | | DWG. NO. DS-203 |
| APPROVED : (DIRECTOR GENERAL) | | SHEET NO. 76 |

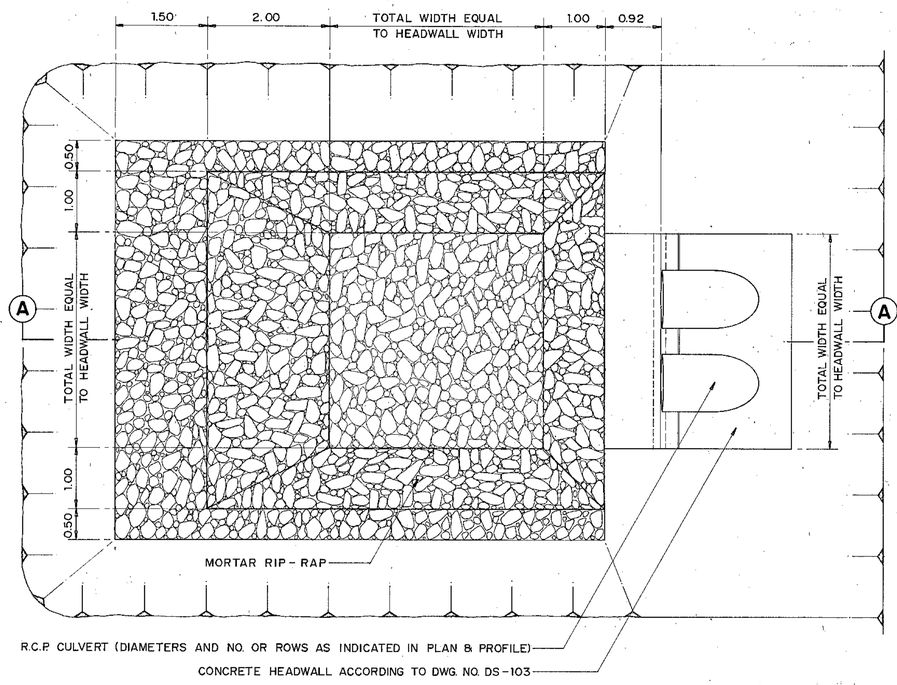


## PLAN OF MORTAR RIP-RAP CATCH BASIN
SCALE 1 : 50

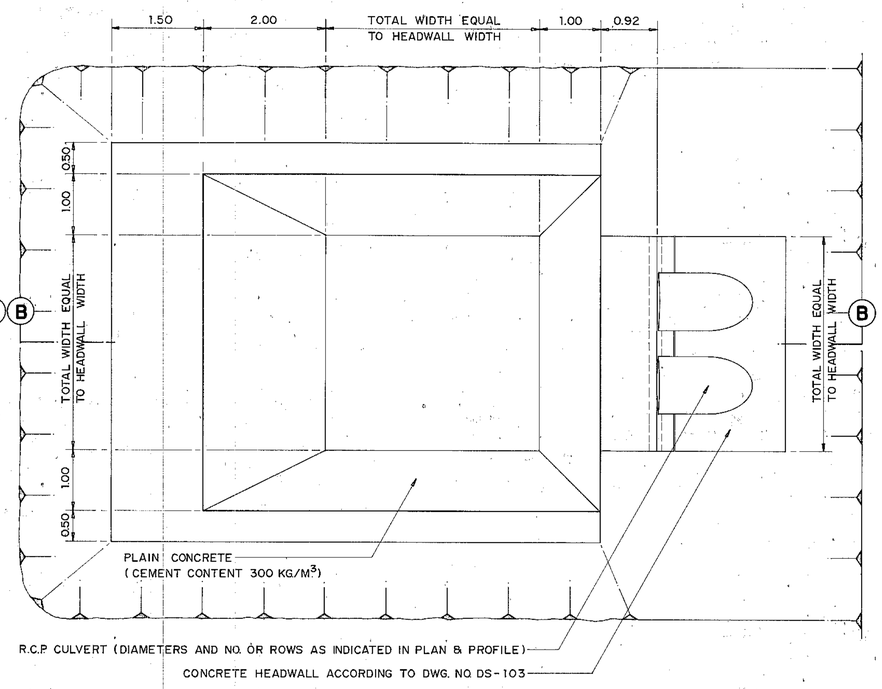


## PLAN OF PLAIN CONCRETE CATCH BASIN
SCALE 1 : 50

## NOTES :

1. ALL DIMENSIONS ARE IN METERS UNLESS OTHERWISE INDICATED.
2. EXCAVATION OR CONSTRUCTION OF EMBANKMENTS SHALL BE PROCESSED AND COMPACTED TO PLANNED SHAPES AND DIMENSIONS.
3. STONE USED FOR MORTAR RIP-RAP SHALL WEIGH BETWEEN 20-45 KG. EACH AND AT LEAST 50 PERCENT SHALL WEIGH MORE THAN 35 KG. STONES SHALL HAVE SUCH SHAPE AND DIMENSIONS AS TO MINIMIZE THE INTERSTICES AFTER PLACING. THE THICKNESS OF THE STONES SHALL BE APPROXIMATELY 15 CM. OR SHOWN ON THE DRAWING.
4. THE LARGEST STONE SHALL BE PLACED FIRST. THE INTERSTICES SHALL BE FILLED WITH SPALLS OR SMALL STONES UNTIL A SMOOTH SURFACE IS OBTAINED. THEN FRESH MORTAR SHALL BE APPLIED TO SEAL ALL JOINTS.
5. CONCRETE SHALL HAVE A MINIMUM ULTIMATE COMPRESSIVE STRENGTH OF 180 KSC. FOR 15x15x15 CM. CUBE AT 28 DAYS. AN APPROXIMATE MIX DESIGN PER CUBIC METER IS SUGGESTED AS FOLLOWS :

| | | |
|---|---|---|
| PORTLAND CEMENT TYPE 1 | 320 | KG. (MIN.) |
| SAND | 0.43 | $M^3$ |
| CRUSHED ROCK OR GRAVEL | 0.86 | $M^3$ |
| CONCRETE SLUMP | 10 | CM. (MAX.) |

6. CLEAR CONCRETE COVER SHALL BE 3 CM.
7. REINFORCING STEEL SHALL CONFORM TO TIS. 20 GRADE SR 24.
8. MORTAR MIXTURE SHALL BE 1:2 BY VOLUME.
9. MASTIC JOINT SEALER SHALL CONFORM TO TIS. 479.

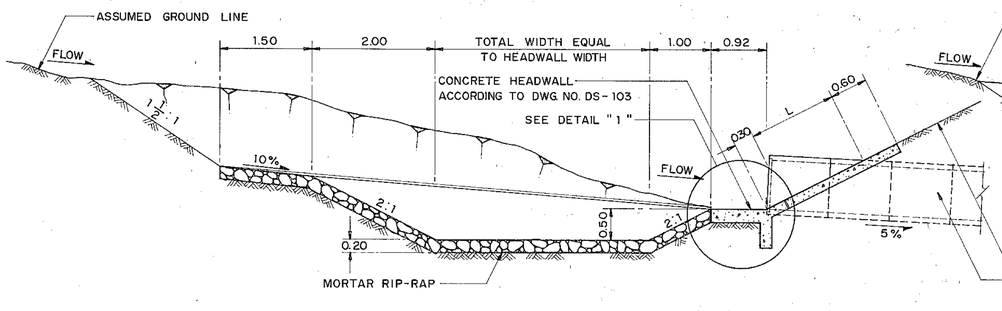


## SECTION (A)-(A)
SCALE 1 : 50

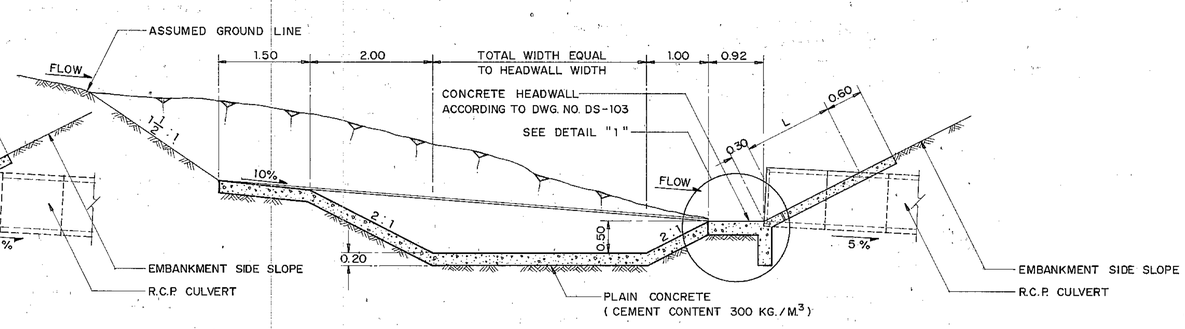


## SECTION (B)-(B)
SCALE 1 : 50

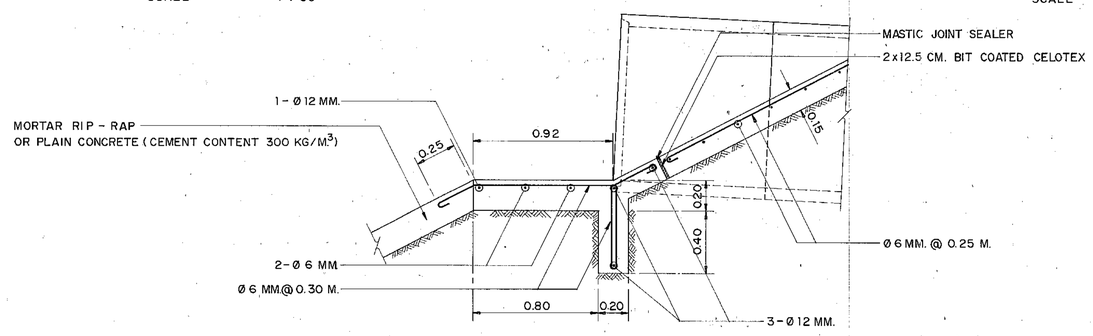


## DETAIL "1"
SCALE 1 : 20

# KINGDOM OF THAILAND
MINISTRY OF TRANSPORT AND COMMUNICATIONS
DEPARTMENT OF HIGHWAYS

STANDARD DRAWING

CATCH BASIN AT INLET FOR R.C.P. CULVERT

| | | |
|---|---|---|
| DESIGNED : D.O.H. & CONSULTANTS | CHECKED : | DATE JULY 1994 |
| SUBMITTED : (DIRECTOR OF LOCATION & DESIGN DIVISION) | | SCALE AS SHOWN |
| | | DWG. NO. DS-301 |
| APPROVED : (DIRECTOR GENERAL) | | SHEET NO. 77 |

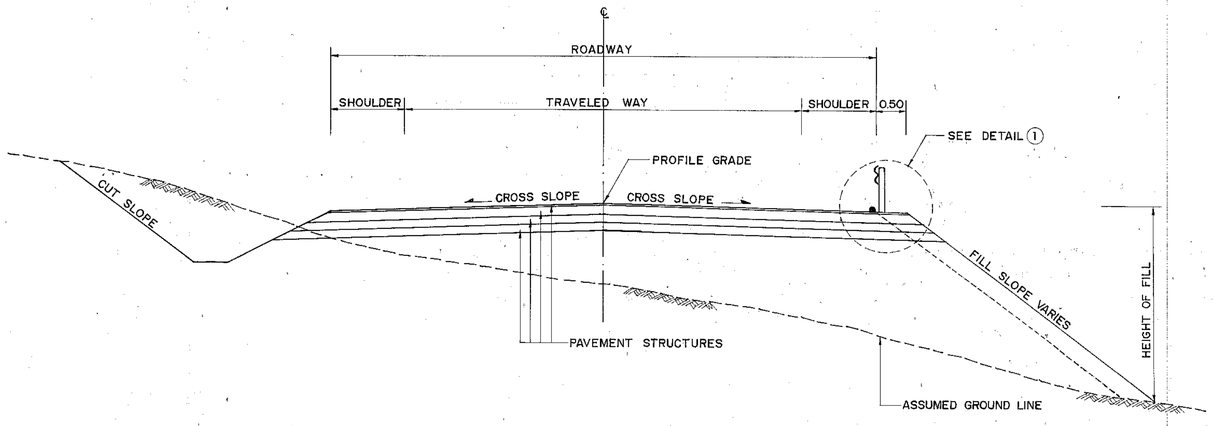


## ASPHALT CURB FOR FILL SECTION (HEIGHT OF FILL ≥ 6.00 M.)
NOT TO SCALE

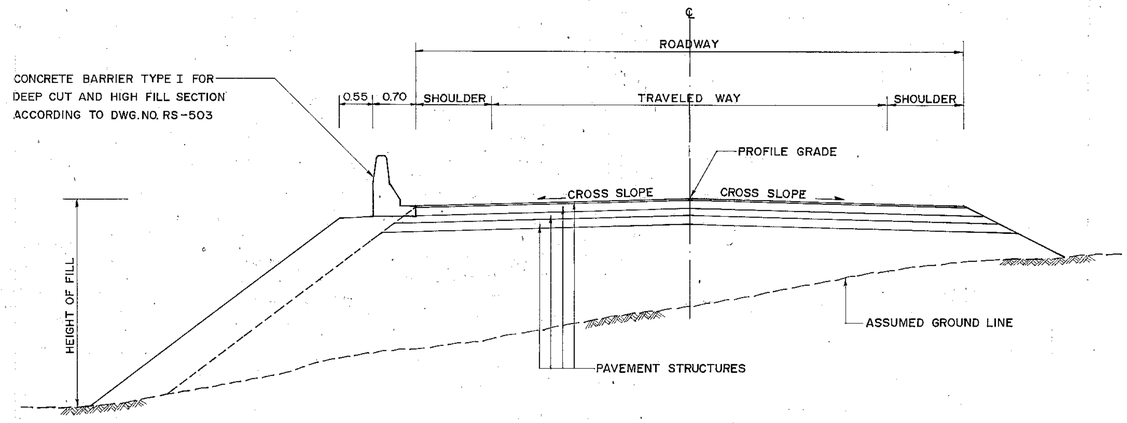


## CONCRETE BARRIER TYPE I FOR FILL SECTION (HEIGHT OF FILL ≥ 6.00 M.)
NOT TO SCALE

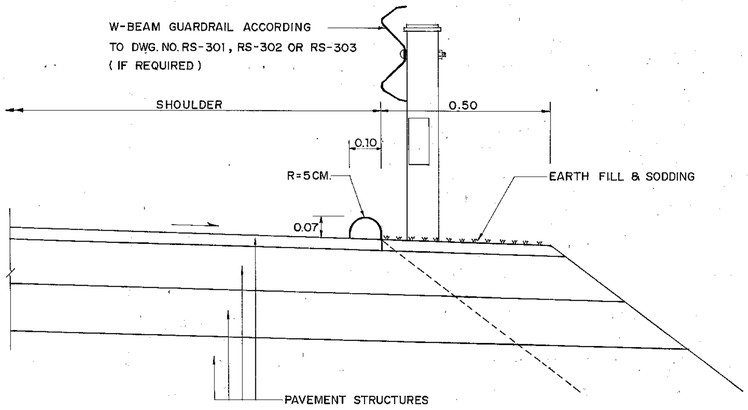


## DETAIL 1
NOT TO SCALE

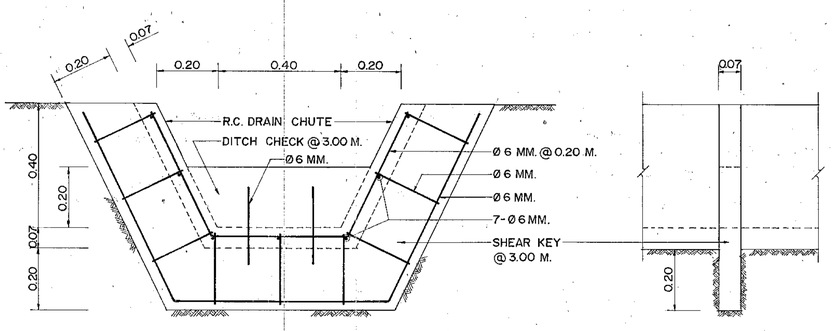


## SECTION (A) - (A) R.C. DRAIN CHUTE, SHEAR KEY AND DITCH CHECK
SCALE 1 : 10

## NOTES :

1. ALL DIMENSIONS ARE IN METERS UNLESS OTHERWISE INDICATED.
2. WHERE THE HEIGHT OF EMBANKMENT IS MORE THAN 6.00 M. ASPHALT CURB (OR CONCRETE BARRIER TYPE I) SHALL BE PROVIDED. FOR NORMAL CROWN SECTION, ASPHALT CURB (OR CONCRETE BARRIER TYPE I) SHALL BE PROVIDED ON BOTH SIDES OF THE ROADWAY. FOR SUPERELEVATED SECTION, ASPHALT CURB (OR CONCRETE BARRIER TYPE I) SHALL BE PROVIDED ON THE INNER SIDE ONLY.
3. FOR FLAT TO 2% GRADE, R.C. DRAIN CHUTE SHALL BE SPACED AT 40.00 M. INTERVALS.
4. FOR GRADE MORE THAN 2% AND ALONG SAG VERTICAL CURVES, R.C. DRAIN CHUTE INTERVALS SHALL BE AS SHOWN IN TABLE 1.
5. R1, R2 AND θ SHALL BE AS DIRECTED BY THE ENGINEER.
6. CONCRETE SHALL HAVE A MINIMUM ULTIMATE COMPRESSIVE STRENGTH OF 180 KSC. FOR 15×15×15 CM. CUBE AT 28 DAYS. AN APPROXIMATE MIX DESIGN PER CUBIC METER IS SUGGESTED AS FOLLOWS :

| | | |
|---|---|---|
| PORTLAND CEMENT TYPE 1 | 320 | KG. (MIN.) |
| SAND | 0.43 | $M^3$ |
| CRUSHED ROCK OR GRAVEL | 0.86 | $M^3$ |
| CONCRETE SLUMP | 10 | CM. (MAX.) |

7. REINFORCING STEEL SHALL CONFORM TO TIS. 20 GRADE SR 24.

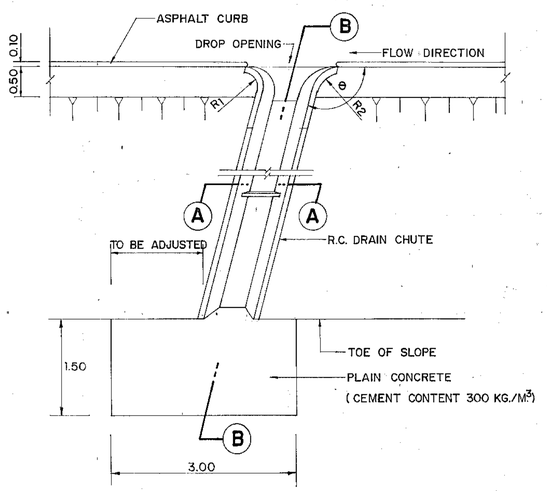


## PLAN OF ASPHALT CURB AND R.C. DRAIN CHUTE
NOT TO SCALE

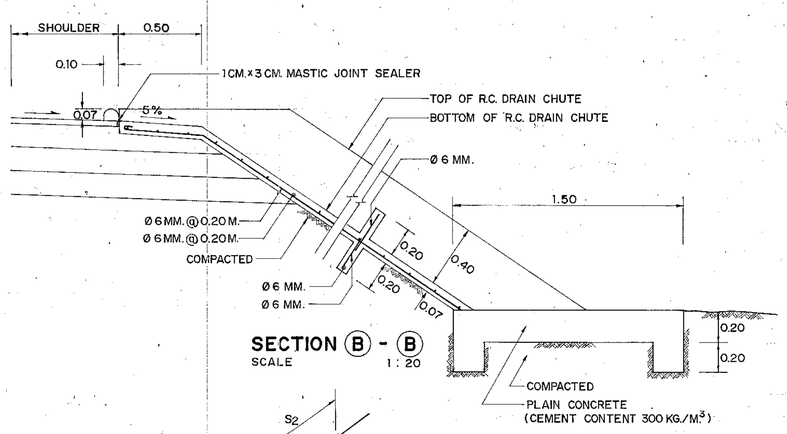


## SECTION (B) - (B)
SCALE 1 : 20

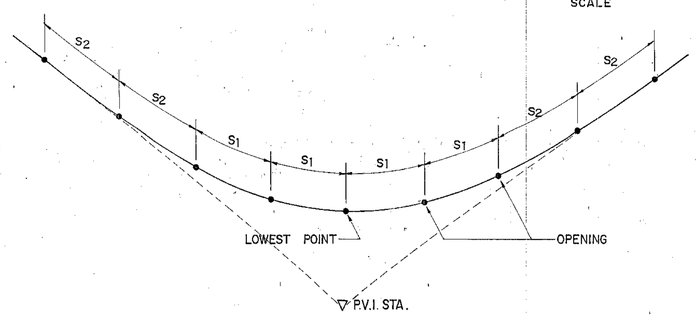


## DRAIN CHUTE OPENING ALONG SAG VERTICAL CURVE
NOT TO SCALE

## TABLE 1

| GRADE (%) | OPENING INTERVALS - M. | |
|---|---|---|
| | $S_1$ | $S_2$ |
| LESS THAN 2% | 30 | 40 |
| 2% – 3% | 35 | 45 |
| 4 AND MORE | 40 | 55 |

**KINGDOM OF THAILAND**
MINISTRY OF TRANSPORT AND COMMUNICATIONS
DEPARTMENT OF HIGHWAYS

STANDARD DRAWING
ASPHALT CURB & DRAIN CHUTE FOR EMBANKMENT PROTECTION

| | | |
|---|---|---|
| DESIGNED : D.O.H. & CONSULTANTS | CHECKED : | DATE JULY 1994 |
| SUBMITTED : (DIRECTOR OF LOCATION & DESIGN DIVISION) | | SCALE AS SHOWN |
| APPROVED : (DIRECTOR GENERAL) | | DWG. NO. DS-302 |
| | | SHEET NO. 78 |

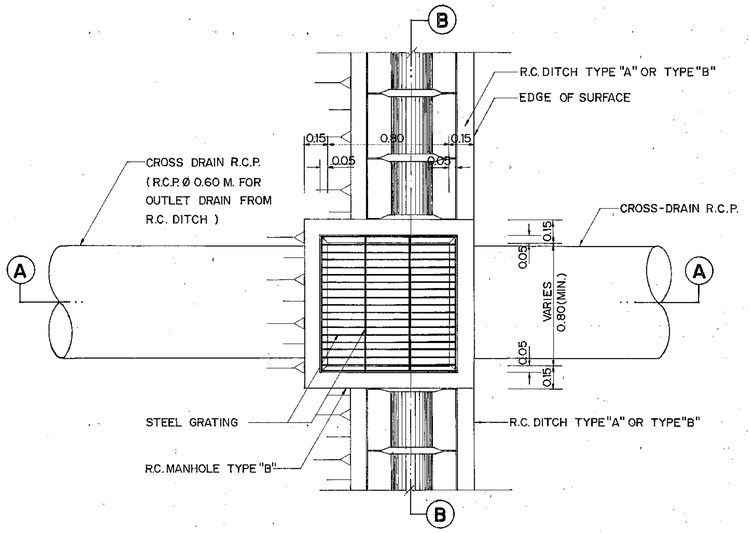


## PLAN OF R.C. DITCH TYPE "A" OR TYPE "B" WITH MANHOLE TYPE "B" AND CROSS-DRAIN PIPE CULVERT

SCALE 1 : 20

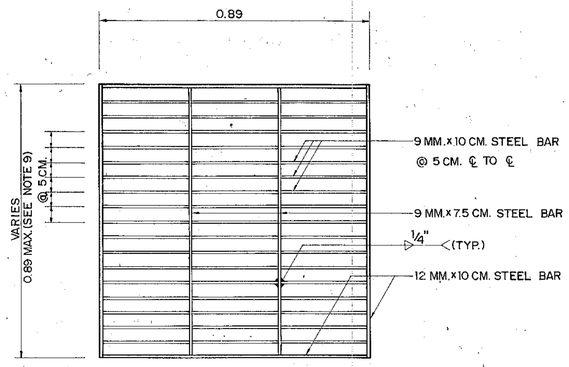


## STEEL MANHOLE COVER FOR MANHOLE TYPE "B"

SCALE 1 : 20

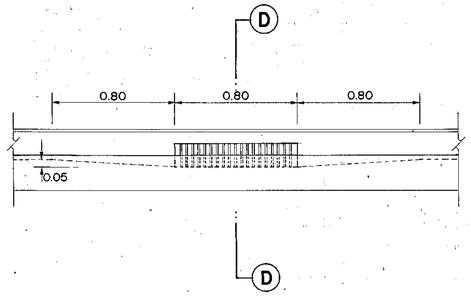


## INLET DRAIN FOR MANHOLE TYPE "C"

SCALE 1 : 10

## NOTES :

1. ALL DIMENSIONS ARE IN METERS UNLESS OTHERWISE INDICATED.
2. CONCRETE SHALL HAVE A MINIMUM ULTIMATE COMPRESSIVE STRENGTH OF 210 KSC. FOR 15x15x15 CM. CUBE AT 28 DAYS. AN APPROXIMATE MIX DESIGN PER CUBIC METER IS SUGGESTED AS FOLLOWS :

| | | |
|---|---|---|
| PORTLAND CEMENT TYPE 1 | 350 | KG.(MIN.) |
| SAND | 0.43 | $M^3$ |
| CRUSHED ROCK OR GRAVEL | 0.86 | $M^3$ |
| CONCRETE SLUMP | 10 | CM.(MAX.) |

3. REINFORCING STEEL SHALL CONFORM TO TIS. 20 GRADE SR 24
4. STRUCTURAL STEEL SHALL CONFORM TO TIS. 116 GRADE Fe 30 AND PAINTED WITH RUST-OLEUM PAINT OR EQUIVALENT IN TWO LAYER.
5. FLAT PLATE STEEL SHALL CONFORM TO TIS. 55 GRADE SR 24
6. LAP LENGTH SHALL NOT BE LESS THAN 40 BAR DIAMETERS.
7. CLEAR CONCRETE COVER SHALL BE 3 CM. UNLESS OTHERWISE INDICATED.
8. MANHOLE TYPE "B" SHALL BE CONSTRUCTED WHERE THE R.C. DITCH TYPE "A" OR TYPE "B" CROSS WITH CROSS-DRAIN R.C.P. OR TO DRAIN WATER FROM THE R.C. DITCH.
9. IF THE WIDTH OF STEEL MANHOLE COVER IS MORE THAN 0.89 M., THE TWO STEEL MANHOLE COVERS SHALL BE USED.

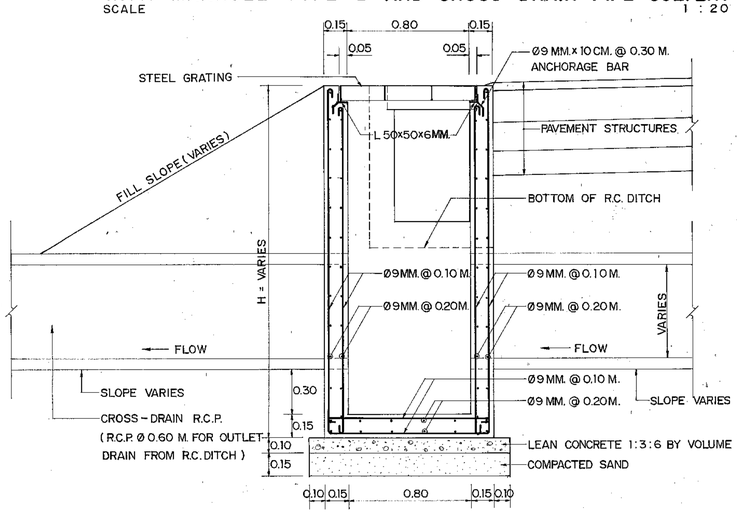


## SECTION (A) - (A) MANHOLE TYPE "B"

SECTION 1 : 20

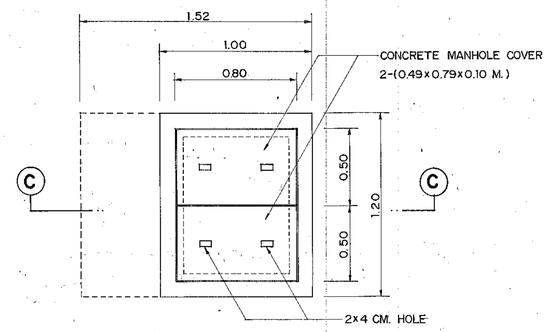


## PLAN OF MANHOLE TYPE "C"

SCALE 1 : 20

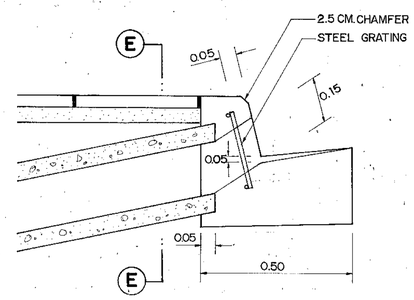


## SECTION (D) - (D)

SCALE 1 : 10

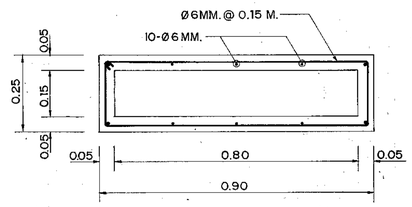


## SECTION (E) - (E)

SCALE 1 : 10

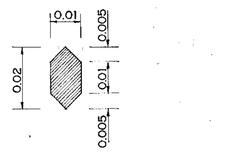


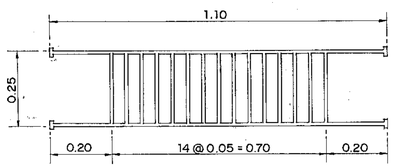


## CAST-IRON GRATING DETAILS

SCALE 1 : 10

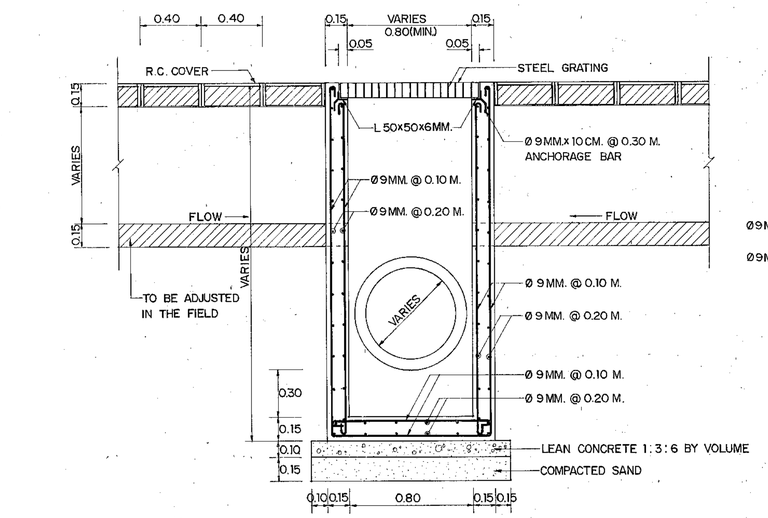


## SECTION (B) - (B) MANHOLE TYPE "B"

SCALE 1 : 20

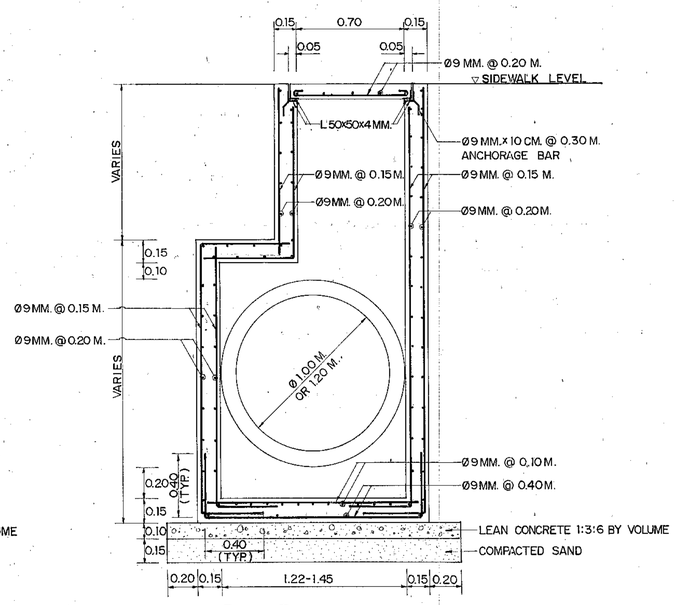


## SECTION (C) - (C) MANHOLE TYPE "C"

SCALE 1 : 20

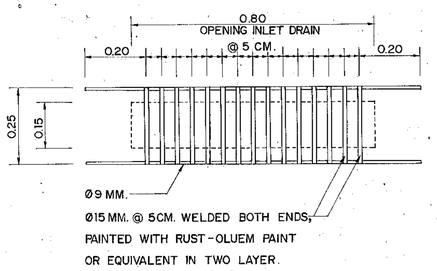


## STEEL GRATING DETAILS

SCALE 1 : 10

# KINGDOM OF THAILAND
## MINISTRY OF TRANSPORT AND COMMUNICATIONS
## DEPARTMENT OF HIGHWAYS

STANDARD DRAWING

MANHOLE DETAILS - I

| | | |
|---|---|---|
| DESIGNED : D.O.H. & CONSULTANTS | CHECKED : | DATE JULY 1994 |
| SUBMITTED : (DIRECTOR OF LOCATION & DESIGN DIVISION) | | SCALE AS SHOWN |
| APPROVED : (DIRECTOR GENERAL) | | DWG. NO. DS-401 |
| | | SHEET NO. 79 |

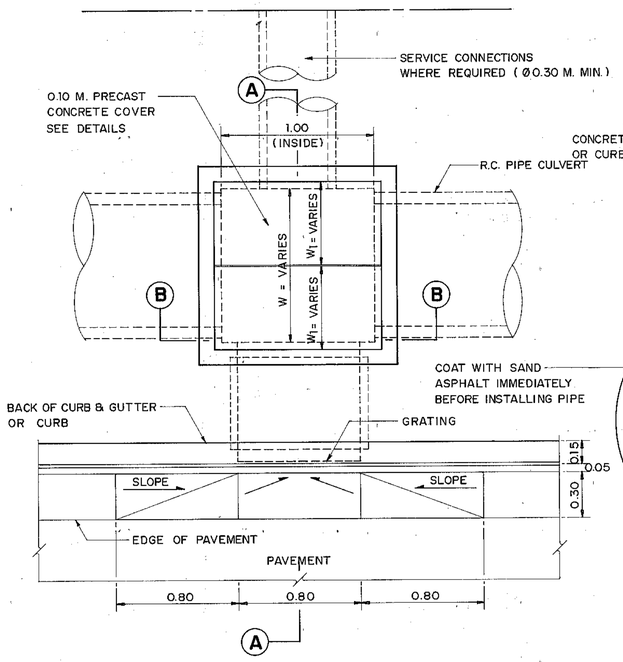


## PLAN OF MANHOLE TYPE "D"

SCALE 1 : 20

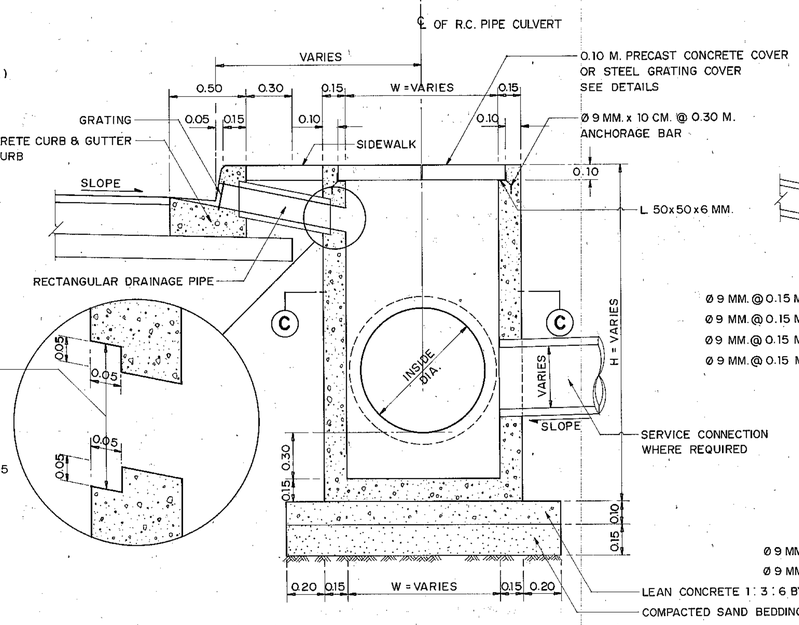


## SECTION (A)-(A)

SCALE 1 : 20

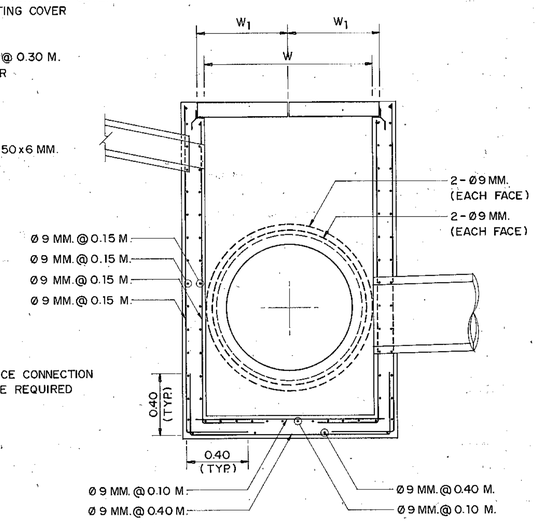


## SECTION (A)-(A)

SCALE 1 : 20

## NOTES :

1. ALL DIMENSIONS ARE IN METERS UNLESS OTHERWISE INDICATED.
2. CONCRETE SHALL HAVE A MINIMUM ULTIMATE COMPRESSIVE STRENGTH OF 210 KSC. FOR 15×15×15 CM. CUBE AT 28 DAYS. AN APPROXIMATE MIX DESIGN PER CUBIC METER IS SUGGESTED AS FOLLOWS :

| | | |
|---|---|---|
| PORTLAND CEMENT TYPE 1 | 350 | KG.(MIN.) |
| SAND | 0.43 | $M^3$ |
| CRUSHED ROCK OR GRAVEL | 0.86 | $M^3$ |
| CONCRETE SLUMP | 10 | CM.(MAX.) |

3. REINFORCING STEEL SHALL CONFORM TO TIS. 20 GRADE SR 24
4. STRUCTURAL STEEL SHALL CONFORM TO TIS.116 GRADE Fe 30
5. FLAT PLATE STEEL SHALL CONFORM TO TIS. 55 GRADE SR 24
6. STRUCTURAL STEEL AND FLAT PLATE STEEL SHALL BE PAINTED WITH RUST-OLEUM PAINT OR EQUIVALENT TWICE AND WITH OIL PAINT ONCE.
7. CLEAR CONCRETE COVER SHALL BE 3 CM.
8. MANHOLE SIZE SHALL VARY ACCORDING TO THE SIZE OF R.C. PIPE CULVERT ( SEE TABLE I )
9. MANHOLES SHALL BE ARRANGED AT 15.00 M.(TYP.) INTERVAL OR AS DIRECTED BY THE ENGINEER.

## TABLE I

| INSIDE DIA. OF R.C. PIPE CULVERT | DIMENSIONS | | |
|---|---|---|---|
| | W | W1 | H |
| Ø 0.60 | 0.80 | 0.440 | VARIES |
| Ø 0.80 | 1.00 | 0.540 | VARIES |
| Ø 1.00 | 1.25 | 0.665 | VARIES |
| Ø 1.20 | 1.50 | 0.790 | VARIES |

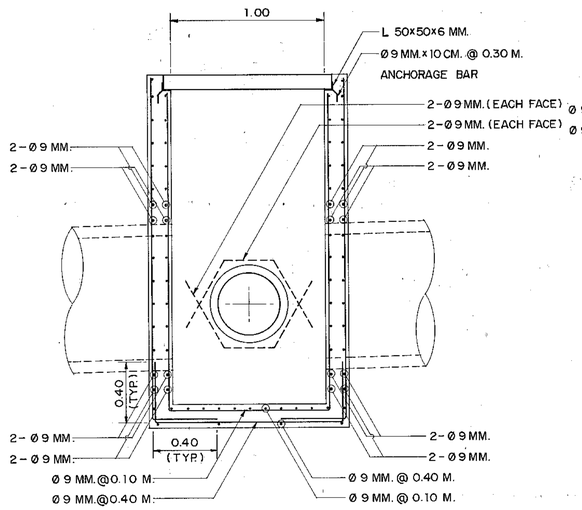


## SECTION (B)-(B)

SCALE 1 : 20

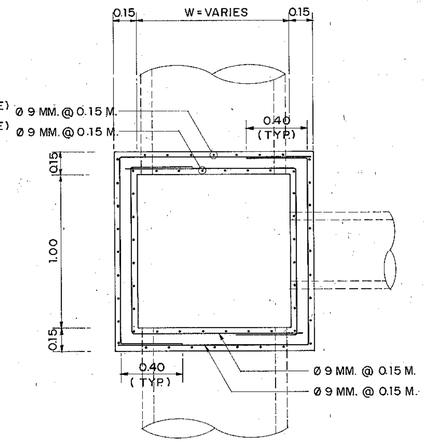


## SECTION (C)-(C)

SCALE 1 : 20

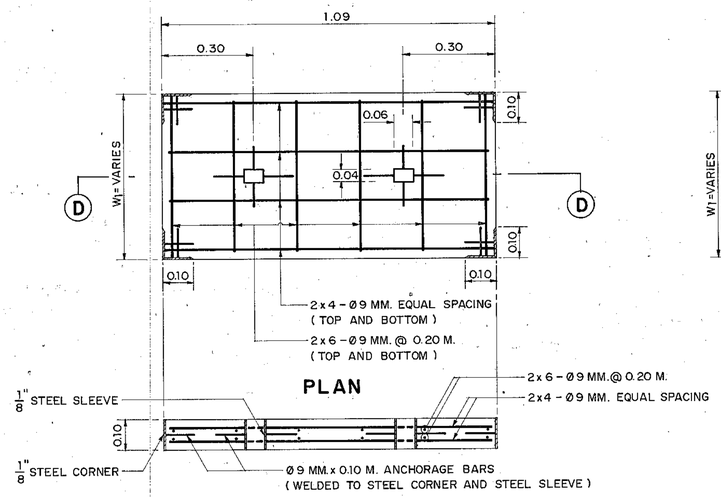


## PLAN

## SECTION (D)-(D)

## CONCRETE COVER DETAILS

SCALE 1 : 10

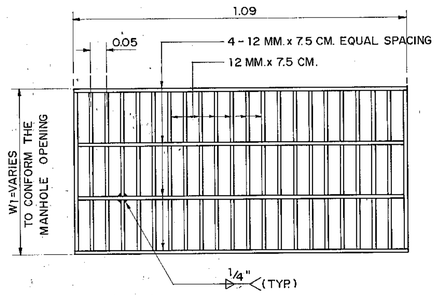


## STEEL GRATING COVER DETAILS

SCALE 1 : 10

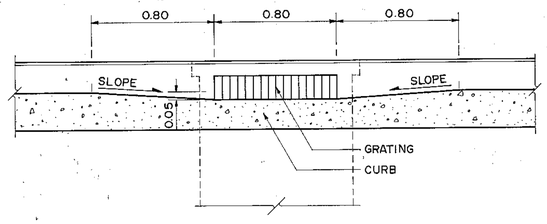


## FRONT VIEW OF GRATING

SCALE 1 : 20

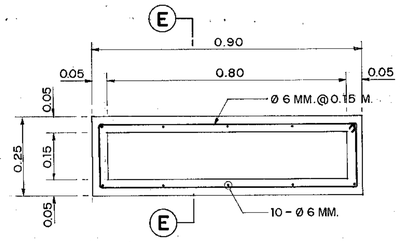


## SECTION OF RECTANGULAR DRAINAGE PIPE

SCALE 1 : 10

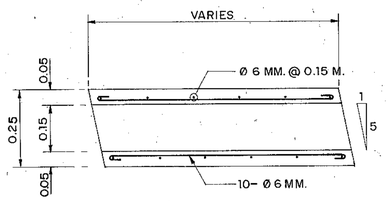


## SECTION (E)-(E)

SCALE 1 : 10

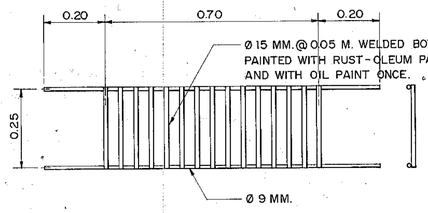


## STEEL GRATING DETAILS

SCALE 1 : 10

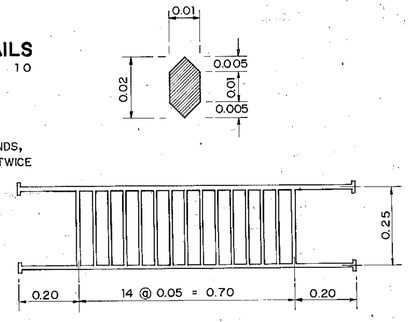


## CAST-IRON GRATING DETAILS

SCALE 1 : 10

# KINGDOM OF THAILAND

MINISTRY OF TRANSPORT AND COMMUNICATIONS
DEPARTMENT OF HIGHWAYS

STANDARD DRAWING

MANHOLE DETAILS- II

| | | |
|---|---|---|
| DESIGNED : D.O.H. & CONSULTANTS | CHECKED : | DATE JULY 1994 |
| SUBMITTED : (DIRECTOR OF LOCATION & DESIGN DIVISION) | | SCALE AS SHOWN |
| APPROVED : (DIRECTOR GENERAL) | | DWG. NO. DS-402 |
| | | SHEET NO. 80 |

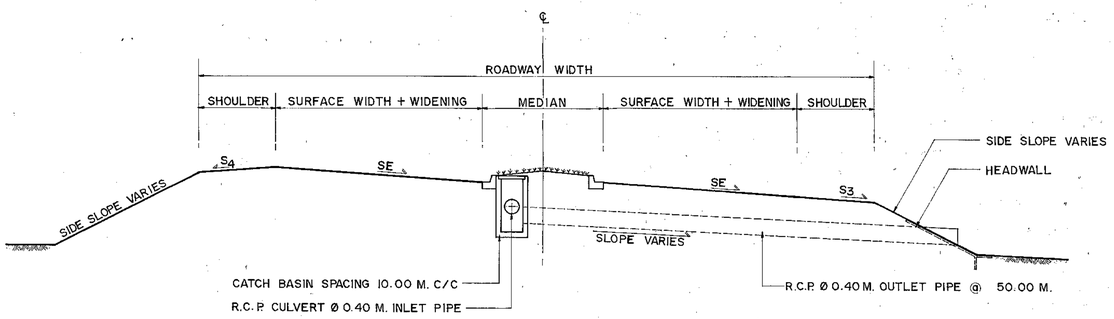


## TYPICAL CROSS SECTION ALONG SUPERELEVATION SECTION
SCALE 1:100

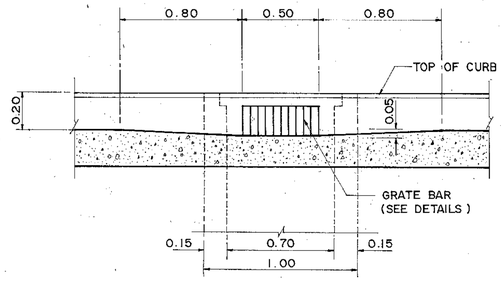


## FRONT VIEW OF GRATING
SCALE 1:20

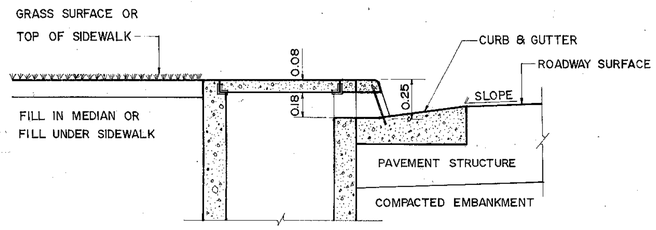


## SECTION (A)-(A)
SCALE 1:20

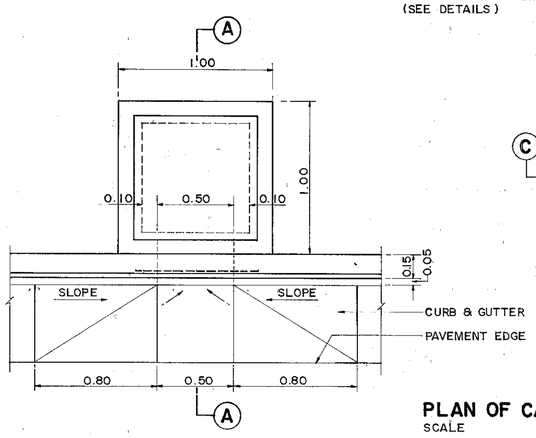


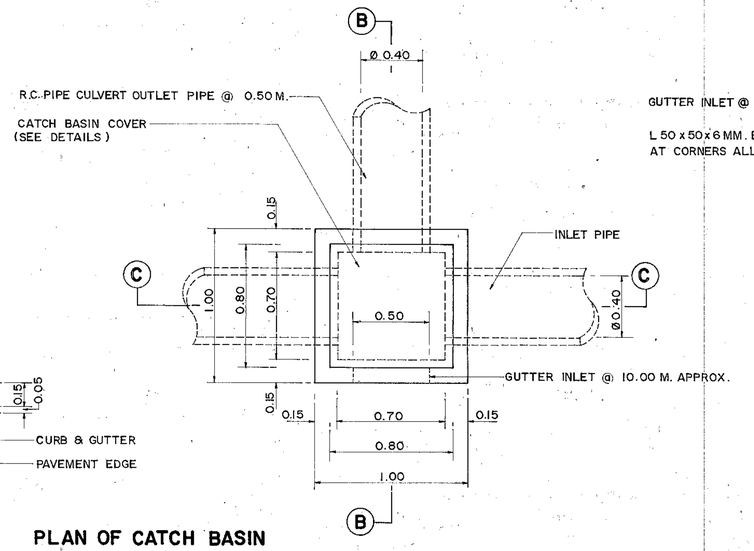


## PLAN OF CATCH BASIN
SCALE 1:20

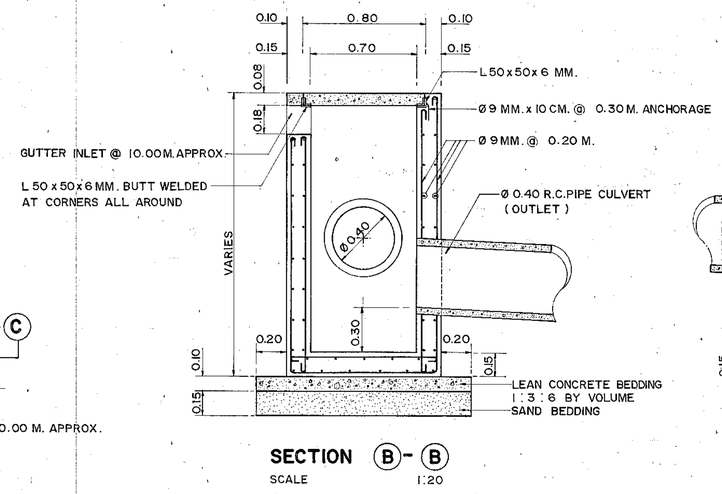


## SECTION (B)-(B)
SCALE 1:20

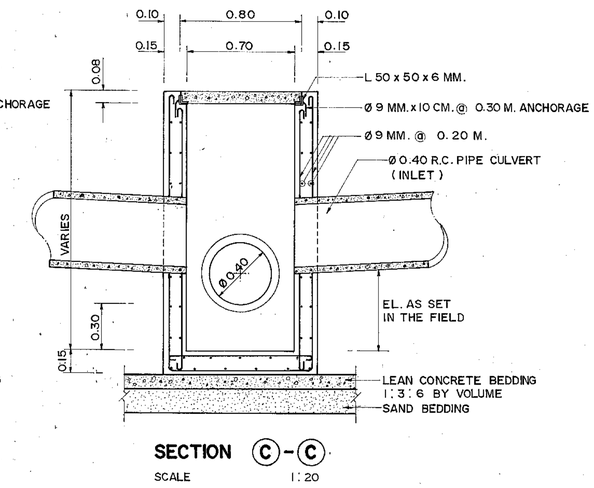


## SECTION (C)-(C)
SCALE 1:20

## NOTES :

1. ALL DIMENSIONS ARE IN METERS UNLESS OTHERWISE INDICATED.
2. CONCRETE SHALL HAVE A MINIMUM ULTIMATE COMPRESSIVE STRENGTH OF 210 KSC. FOR 15 x 15 x 15 CM. CUBE AT 28 DAYS. AN APPROXIMATE MIX DESIGN PER CUBIC METER IS SUGGESTED AS FOLLOWS :

| | | |
|---|---|---|
| PORTLAND CEMENT TYPE 1 | 350 | KG. (MIN.) |
| SAND | 0.43 | $M^3$ |
| CRUSHED ROCK OR GRAVEL | 0.86 | $M^3$ |
| CONCRETE SLUMP | 10 | CM. (MAX.) |

3. REINFORCING STEEL SHALL CONFORM TO TIS. 20 GRADE SR 24.
4. STRUCTURAL STEEL SHALL CONFORM TO TIS. 116 GRADE Fe 30.
5. FLAT PLATE STEEL SHALL CONFORM TO TIS. 55 GRADE SR 24.
6. STRUCTURAL STEEL AND FLAT PLATE STEEL SHALL BE PAINTED WITH RUST-OLEUM PAINT OR EQUIVALENT TWICE AND WITH OIL PAINT ONCE.
7. CLEAR CONCRETE COVER SHALL BE 3 CM.

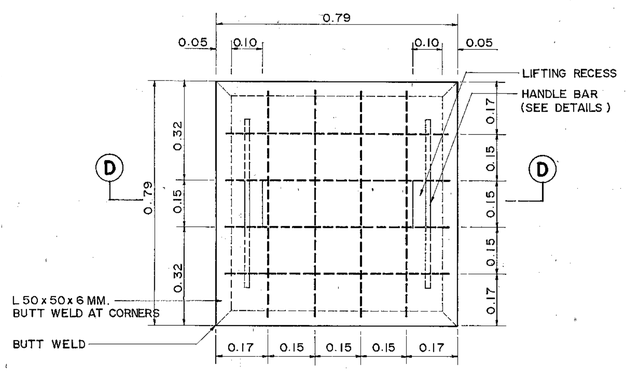


## PLAN

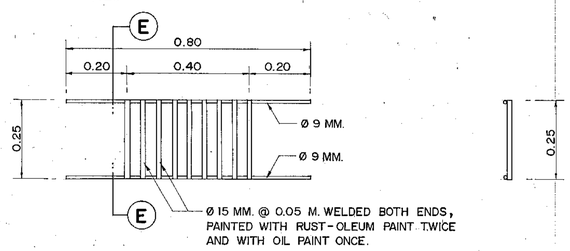


## GRATE BAR DETAILS
SCALE 1:10

## SECTION (E)-(E)
SCALE 1:10

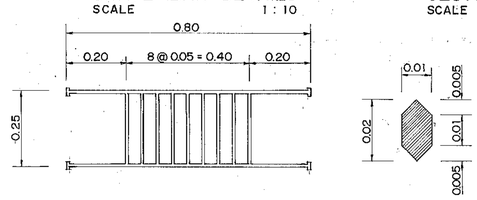


## CAST-IRON GRATING DETAILS
SCALE 1:10




## MANHOLE SECTION USED IN TURN-AROUND OF KHLONG ACCESS
SCALE 1:20

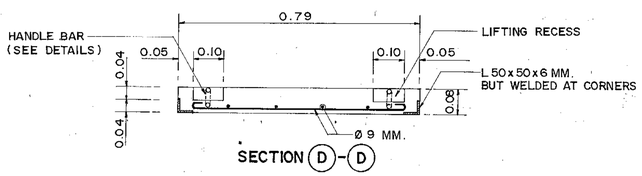


SECTION (D)-(D)

## CATCH BASIN COVER
SCALE 1:10

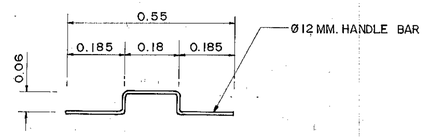


## HANDLE BAR DETAILS
SCALE 1:10

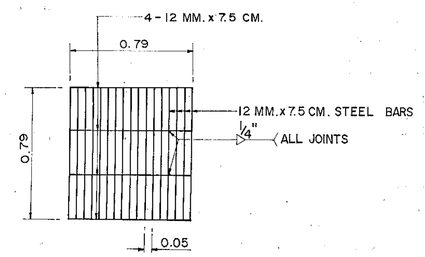


## STEEL GRATING COVER PLAN
SCALE 1:10

# KINGDOM OF THAILAND
MINISTRY OF TRANSPORT AND COMMUNICATIONS
DEPARTMENT OF HIGHWAYS

STANDARD DRAWING

CATCH BASIN

| | | |
|---|---|---|
| DESIGNED: D.O.H. & CONSULTANTS | CHECKED: | DATE JULY 1994 |
| SUBMITTED: (DIRECTOR OF LOCATION & DESIGN DIVISION) | | SCALE AS SHOWN |
| APPROVED: (DIRECTOR GENERAL) | | DWG. NO. DS-403 |
| | | SHEET NO. 81 |

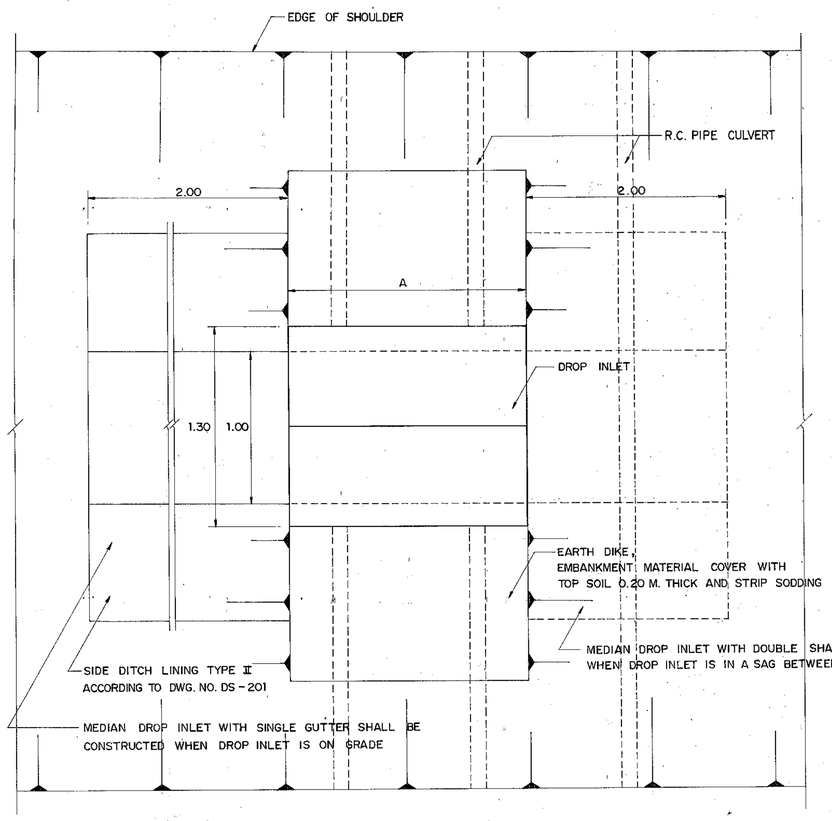


PLAN
SCALE 1 : 20

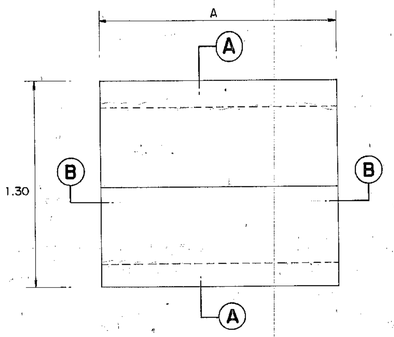


PLAN DROP INLET
SCALE 1 : 20

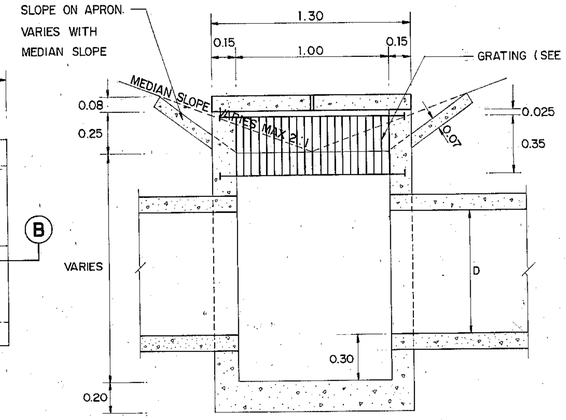


SECTION (A)-(A)
SCALE 1 : 20

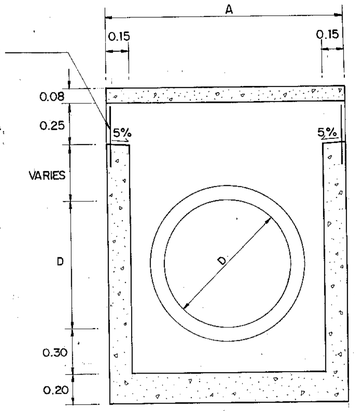


SECTION (B)-(B)
SCALE 1 : 20

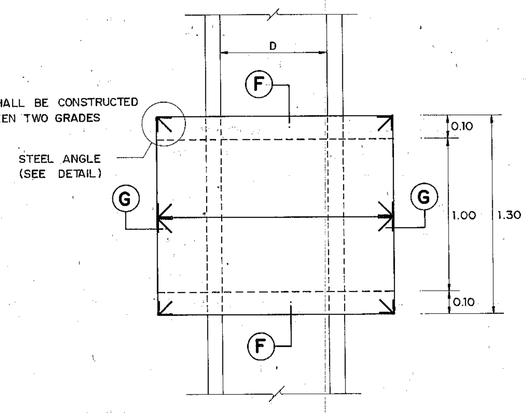


STEEL CORNER GUARD
SCALE 1 : 20

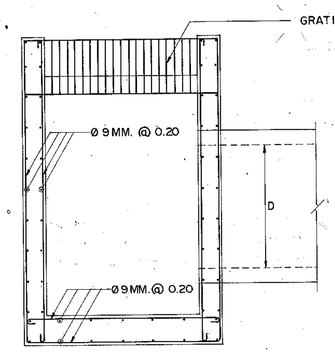


SECTION (F)-(F)
SCALE 1 : 20

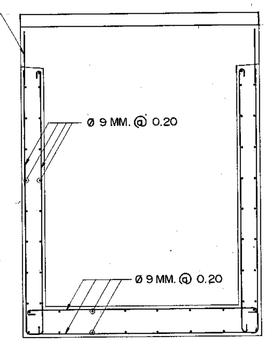


SECTION (G)-(G)
SCALE 1 : 20

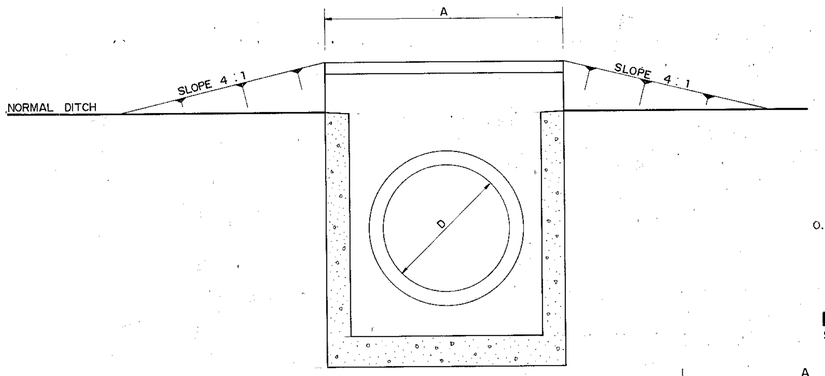


SECTION (E)-(E)
SCALE 1 : 20

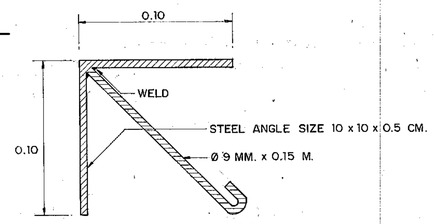


DETAIL OF STEEL ANGLE
SCALE 1 : 20

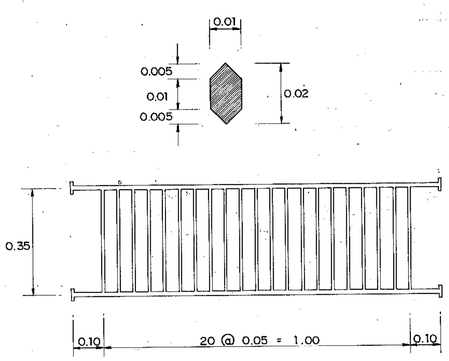


CAST - IRON GRATING DETAILS
SCALE 1 : 10

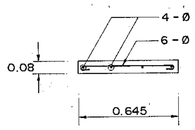


SECTION (D)-(D)

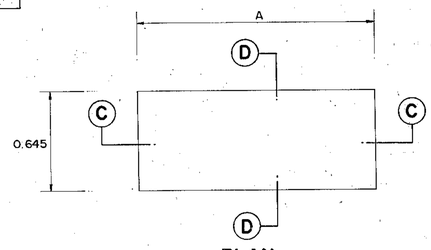


PLAN

COVER FOR DROP INLET DETAIL
SCALE 1 : 20

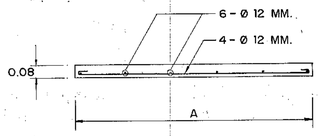


SECTION (C)-(C)

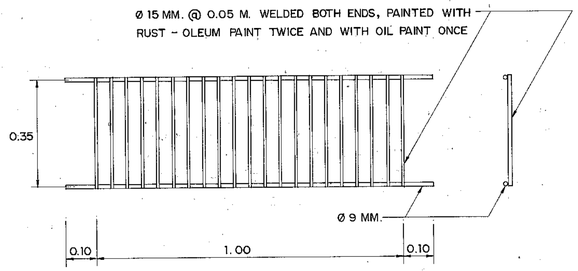


STEEL GRATING DETAILS
SCALE 1 : 10

## NOTES :

1. ALL DIMENSIONS ARE IN METERS UNLESS OTHERWISE INDICATED.
2. CONCRETE SHALL HAVE A MAXIMUM ULTIMATE COMPRESSIVE STRENGTH OF 210 KSC. FOR 15 x 15 x 15 CM. CUBE AT 28 DAYS. AN APPROXIMATE MIX DESIGN PER CUBIC METERS IS SUGGESTED AS FOLLOWS :

| | | |
|---|---|---|
| PORTLAND CEMENT TYPE I | 350 | KG. (MIN.) |
| SAND | 0.43 | $M^3$ |
| CRUSHED ROCK OR GRAVEL | 0.86 | $M^3$ |
| CONCRETE SLUMP | 10 | CM. (MAX.) |

3. CLEAR CONCRETE COVER SHALL BE 5 CM.
4. REINFORCING STEEL SHALL CONFORM TO TIS. 20 GRADE SR 24.
5. STRUCTURE STEEL SHALL CONFORM TO TIS. 116 GRADE Fe 24.
6. WIDTH OF DROP INLET (A)

| | | |
|---|---|---|
| A = 1.10 M. | FOR R.C. PIPE CULVERT DIAMETER | D = 0.40 M. |
| A = 1.10 M. | " " | D = 0.60 M. |
| A = 1.55 M. | " " | D = 0.80 M. |
| A = 1.55 M. | " " | D = 1.00 M. |
| A = 1.80 M. | " " | D = 1.20 M. |

**KINGDOM OF THAILAND**
**MINISTRY OF TRANSPORT AND COMMUNICATIONS**
**DEPARTMENT OF HIGHWAYS**

STANDARD DRAWING

MEDIAN DROP INLET TYPE I

| | | |
|---|---|---|
| DESIGNED : D.O.H. & CONSULTANTS | CHECKED : | DATE JULY 1994 |
| SUBMITTED : (DIRECTOR OF LOCATION & DESIGN DIVISION) | | SCALE AS SHOWN |
| | | DWG. NO. DS-404 |
| APPROVED : FOR (DIRECTOR GENERAL) | | SHEET NO. 82 |

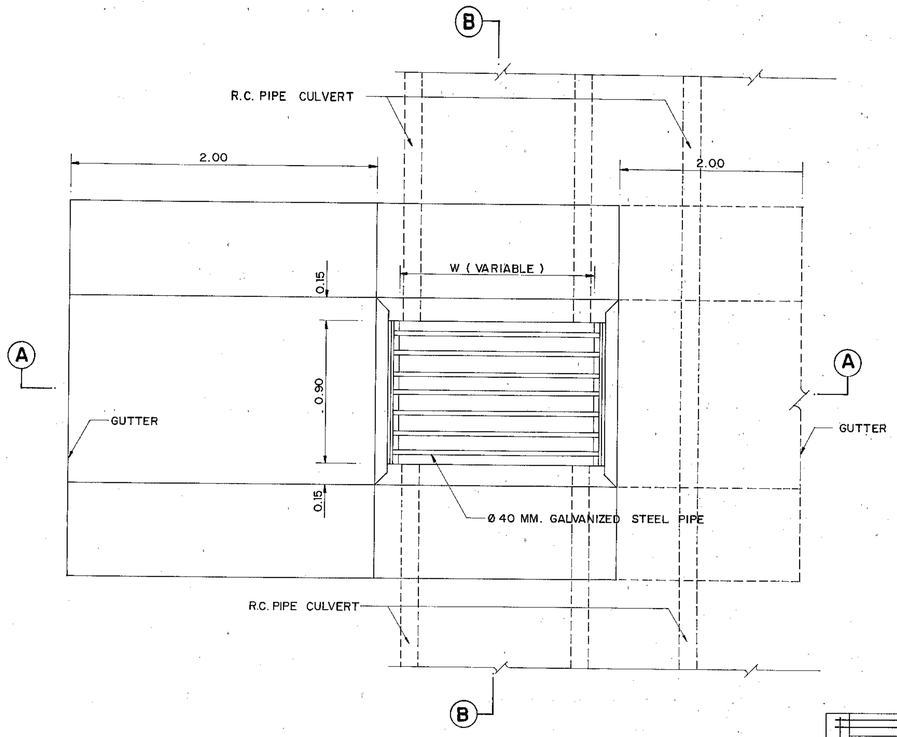


**P L A N**
SCALE 1 : 20

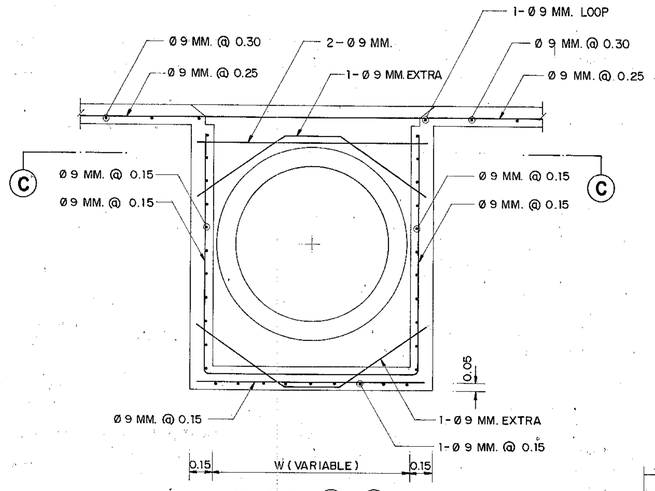


**SECTION (A) - (A)** (REINFORCEMENT DETAILS)
SCALE 1 : 20

| DIMENSIONAL REQUIREMENTS OF MEDIAN DROP INLET | | |
|---|---|---|
| INSIDE DIA. OF R.C. PIPE CULVERT (M.) | W (M.) | MIN. H (M.) |
| 0.40 | 0.80 | 1.00 |
| 0.60 | 0.80 | 1.20 |
| 0.80 | 1.25 | 1.40 |
| 1.00 | 1.25 | 1.60 |
| 1.20 | 1.50 | 1.80 |

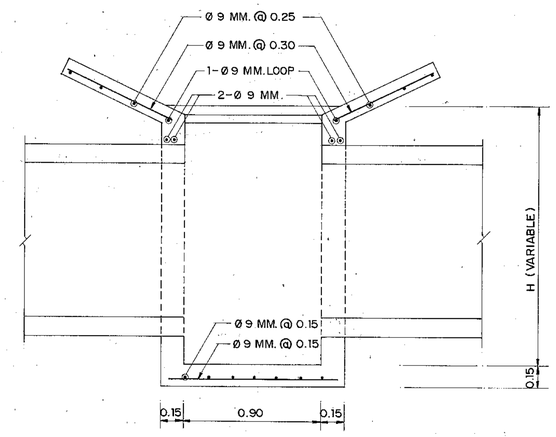


**SECTION (B) - (B)** (REINFORCEMENT DETAILS)
SCALE 1 : 20

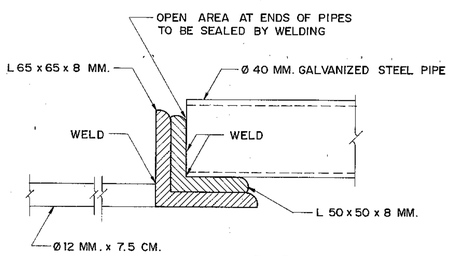


**DETAIL "A"**
SCALE 1 : 2

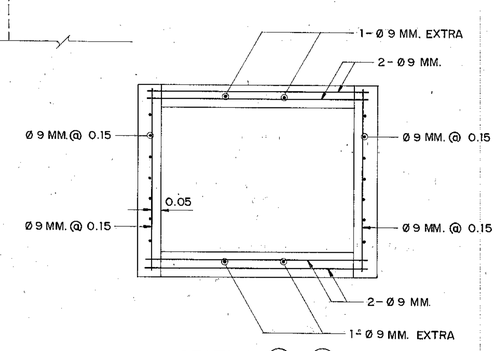


**SECTION (C) - (C)** (REINFORCEMENT DETAILS)
SCALE 1 : 20

## NOTES :

1. ALL DIMENSIONS ARE IN METERS UNLESS OTHERWISE INDICATED.
2. MEDIAN DROP INLET WITH SINGLE GUTTER SHALL BE CONSTRUCTED WHEN DROP INLET IS ON GRADE.
3. MEDIAN DROP INLET WITH DOUBLE GUTTER SHALL BE CONSTRUCTED WHEN DROP INLET IS IN A SAG BETWEEN TWO GRADES.
4. MEDIAN DITCH TO BE WARPED TO TIE SMOOTHLY INTO INLET GUTTER.
5. CONCRETE SHALL HAVE A MINIMUM ULTIMATE COMPRESSIVE STRENGTH OF 210 KSC. FOR 15 x 15 x 15 CM. CUBE AT 28 DAYS. AN APPROXIMATE MIX DESIGN PER CUBIC METER IS SUGGESTED AS FOLLOWS :

| | | |
|---|---|---|
| PORTLAND CEMENT TYPE 1 | 350 | KG. (MIN.) |
| SAND | 0.43 | $M^3$ |
| CRUSHED ROCK OR GRAVEL | 0.86 | $M^3$ |
| CONCRETE SLUMP | 10 | CM. (MAX.) |

6. CLEAR CONCRETE COVER SHALL BE 5 CM.
7. REINFORCING STEEL SHALL CONFORM TO TIS. 20 GRADE SR 24.

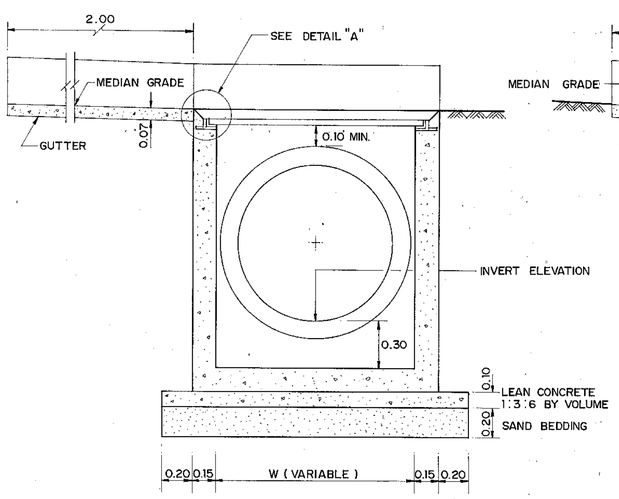


**SECTION (A) - (A)**
SCALE 1 : 20

**FOR SINGLE GUTTER**

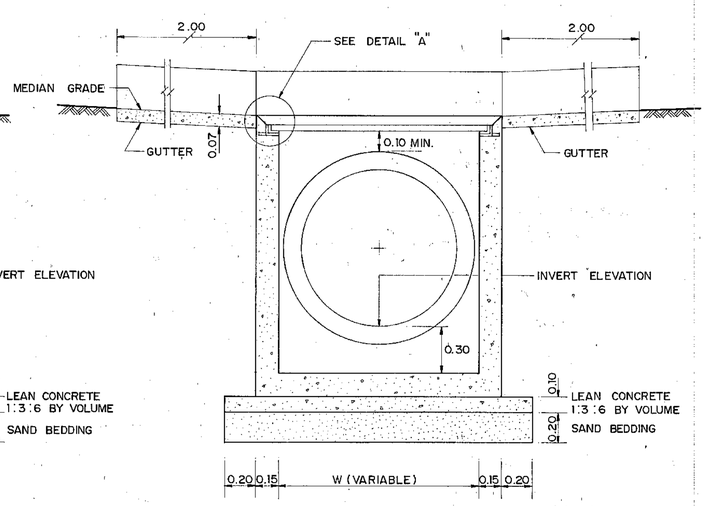


**SECTION (A) - (A)**
SCALE 1 : 20

**FOR DOUBLE GUTTER**

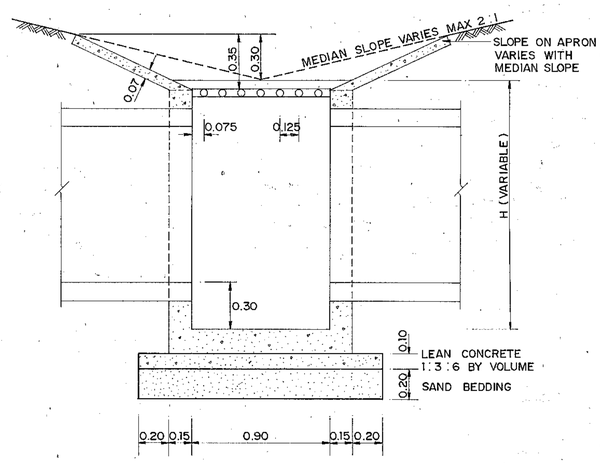


**SECTION (B) - (B)**
SCALE 1 : 20

# KINGDOM OF THAILAND
## MINISTRY OF TRANSPORT AND COMMUNICATIONS
## DEPARTMENT OF HIGHWAYS

STANDARD DRAWING

MEDIAN DROP INLET TYPE II

| | | |
|---|---|---|
| DESIGNED : D.O.H. & CONSULTANTS | CHECKED : | DATE JULY 1994 |
| SUBMITTED : (DIRECTOR OF LOCATION & DESIGN DIVISION) | | SCALE AS SHOWN |
| | | DWG. NO. DS-405 |
| APPROVED : (DIRECTOR GENERAL) | | SHEET NO. 83 |

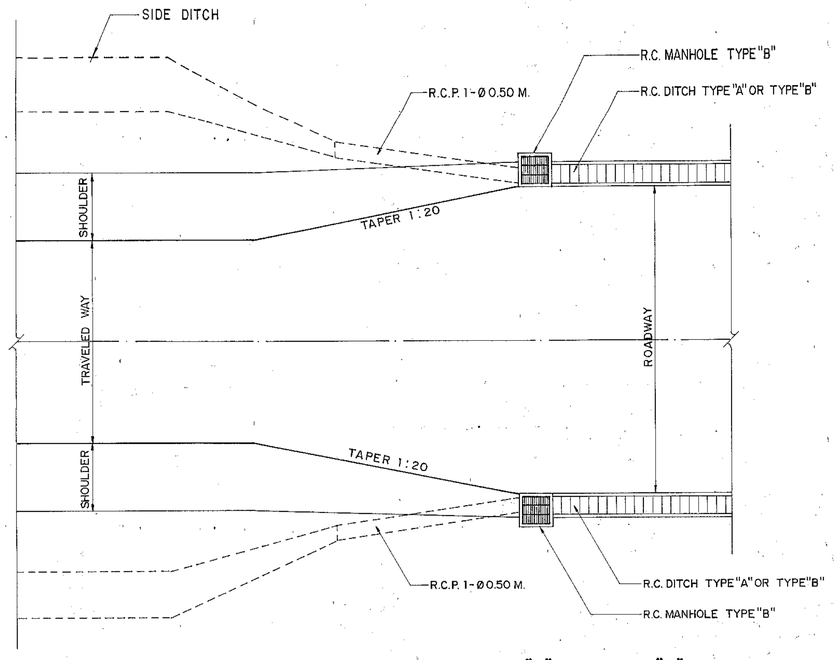


## PLAN OF DRAIN CHUTE FOR R.C. DITCH TYPE "A" AND TYPE "B"

NOT TO SCALE

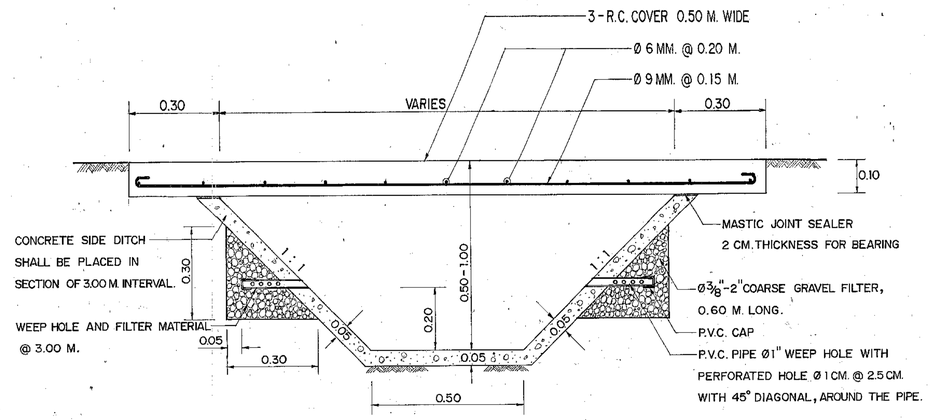


## SECTION OF CONCRETE SIDE DITCH WITH R.C. COVER FOR CROSS WALK

SCALE 1 : 10

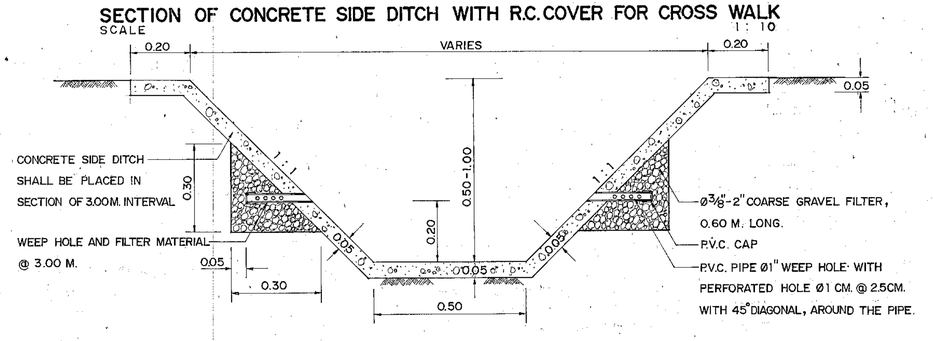


## SECTION OF CONCRETE SIDE DITCH

SCALE 1 : 10

## NOTES :

1. ALL DIMENSIONS ARE IN METERS UNLESS OTHERWISE INDICATED.
2. CONCRETE FOR SIDE DITCH SHALL HAVE A MINIMUM ULTIMATE COMPRESSIVE STRENGTH OF 180 KSC. FOR 15x15x15 CM. CUBE AT 28 DAYS. AN APPROXIMATE MIX DESIGN PER CUBIC METER IS SUGGESTED AS FOLLOW :

| | | |
|---|---|---|
| PORTLAND CEMENT TYPE 1 | 320 | KG.(MIN.) |
| SAND | 0.43 | $M^3$ |
| CRUSHED ROCK OR GRAVEL | 0.86 | $M^3$ |
| CONCRETE SLUMP | 10 | CM.(MAX.) |

3. CONCRETE FOR R.C. DITCH TYPE "A" AND TYPE "B" SHALL HAVE A MINIMUM ULTIMATE COMPRESSIVE STRENGTH OF 210 KSC. FOR 15x15x15 CM. CUBE AT 28 DAYS. AN APPROXIMATE MIX DESIGN PER CUBIC METER IS SUGGESTED AS FOLLOW :

| | | |
|---|---|---|
| PORTLAND CEMENT TYPE 1 | 350 | KG.(MIN.) |
| SAND | 0.43 | $M^3$ |
| CRUSHED ROCK OR GRAVEL | 0.86 | $M^3$ |
| CONCRETE SLUMP | 10 | CM.(MAX.) |

4. REINFORCING STEEL SHALL CONFORM TO TIS. 20 GRADE SR 24
5. STRUCTURAL STEEL SHALL CONFORM TO TIS. 116 GRADE Fe 30 AND PAINTED WITH RUST-OLEUM PAINT OR EQUIVALENT IN TWO LAYERS.
6. FLAT PLATE STEEL SHALL CONFORM TO TIS. 55 GRADE SR 24
7. LAP LENGTH SHALL NOT BE LESS THAN 40 BAR DIAMETERS.
8. CLEAR CONCRETE COVER SHALL BE 3 CM. UNLESS OTHERWISE INDICATED.
9. JOINT IN R.C. DITCH TYPE "A" AND TYPE "B" SHALL BE SPACED AT 10.00 M. INTERVAL. WIDTH OF THE JOINT IS 1 CM. AND FILLED WITH MORTAR (PORTLAND CEMENT : SAND) RATIO 1:3 BY VOLUME.
10. R.C. DITCH TYPE "A" AND TYPE "B" CROSS DRAIN AT CONNECTION ROAD SHALL BE PRECAST 1 M. LONG. WIDTH OF THE JOINT IS 1 CM. AND FILLED WITH MORTOR (PORTLAND CEMENT : SAND) RATIO 1:3 BY VOLUME.
11. P.V.C. PIPE SHALL CONFORM TO TIS. 17 CLASS 13.5
12. PAYMENT FOR R.C. DITCH TYPE "A" SHALL INCLUDE THE COST OF P.V.C. PIPE AND FILTER MATERIAL.

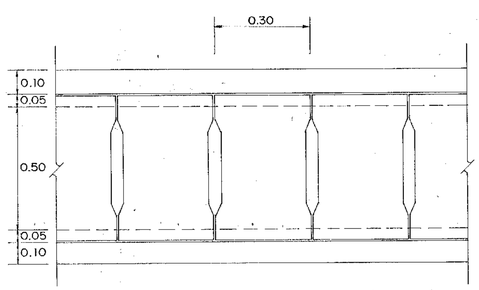


## PLAN OF R.C. DITCH TYPE "A" WITH R.C. COVER

SCALE 1 : 12.5

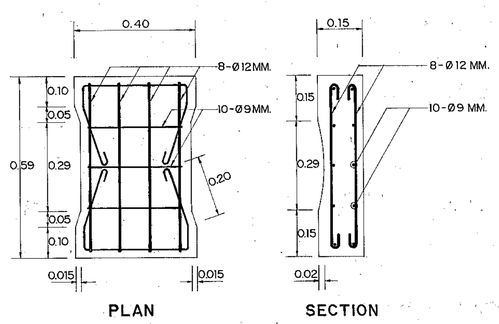


## R.C. COVER OF R.C. DITCH TYPE "A"

SCALE 1 : 10

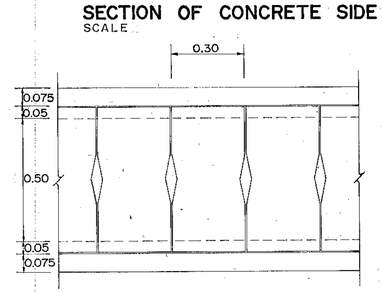


## PLAN OF R.C. DITCH TYPE "B" WITH R.C. COVER

SCALE 1 : 12.5

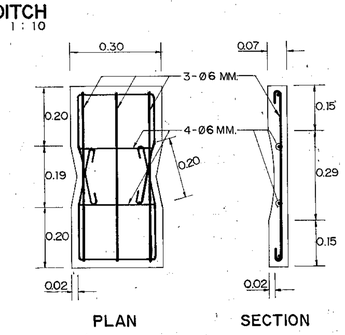


## R.C. COVER OF R.C. DITCH TYPE "B"

SCALE 1 : 10

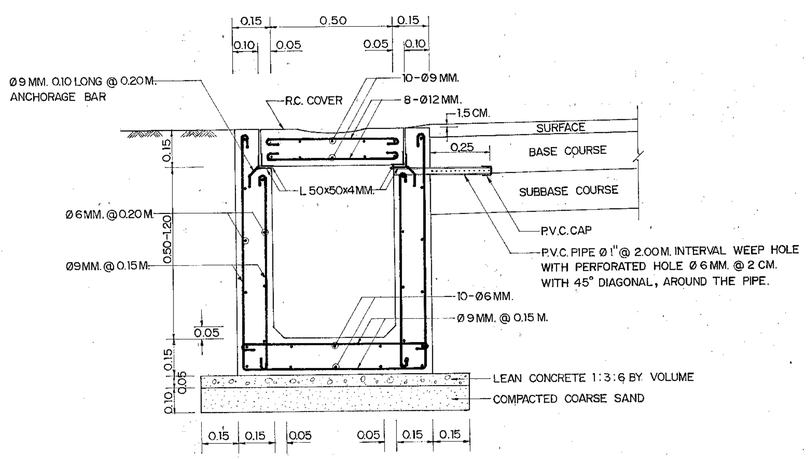


## SECTION OF R.C. DITCH TYPE "A"

SCALE 1 : 12.5

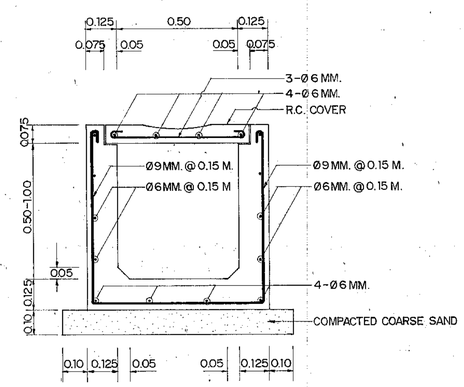


## SECTION OF R.C. DITCH TYPE "B"

SCALE 1 : 12.5

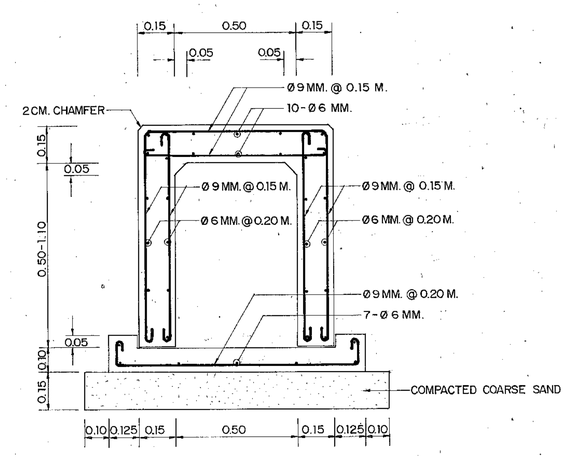


## SECTION OF R.C. DITCH TYPE "A" AND TYPE "B" CROSS DRAIN AT CONNECTION ROAD

SCALE 1 : 12.5

# KINGDOM OF THAILAND
## MINISTRY OF TRANSPORT AND COMMUNICATIONS
## DEPARTMENT OF HIGHWAYS

STANDARD DRAWING

R.C. DITCH DETAILS-I

| | | |
|---|---|---|
| DESIGNED : D.O.H. & CONSULTANTS | CHECKED : | DATE JULY 1994 |
| SUBMITTED : (DIRECTOR OF LOCATION & DESIGN DIVISION) | | SCALE AS SHOWN |
| | | DWG. NO. DS-406 |
| APPROVED : (DIRECTOR GENERAL) | | SHEET NO. 84 |

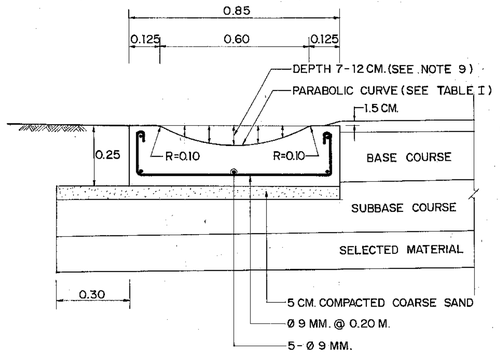


## SECTION OF R.C. GUTTER
SCALE 1 : 12.5

### TABLE I

| DEPTH (CM.) | X = 10 CM. Y(CM.) | X = 20 CM. Y(CM.) |
|---|---|---|
| 7.00 | 6.22 | 3.89 |
| 8.00 | 7.11 | 4.44 |
| 9.00 | 8.00 | 5.00 |
| 10.00 | 8.89 | 5.56 |
| 11.00 | 9.78 | 6.11 |
| 12.00 | 10.67 | 6.67 |

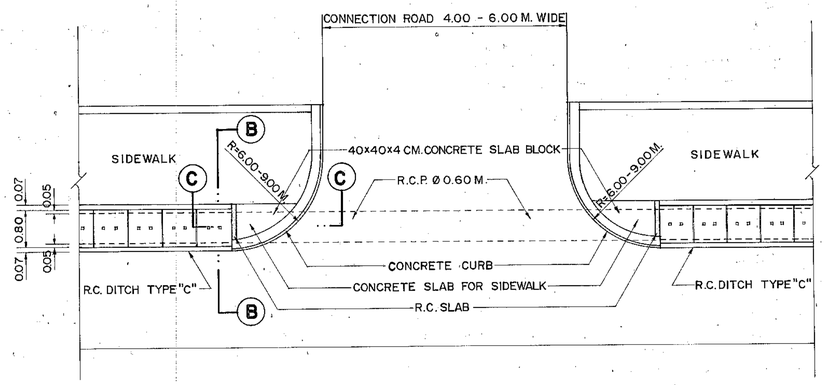


## R.C. DITCH TYPE "C" AT SIDE ROAD CONNECTION
NOT TO SCALE

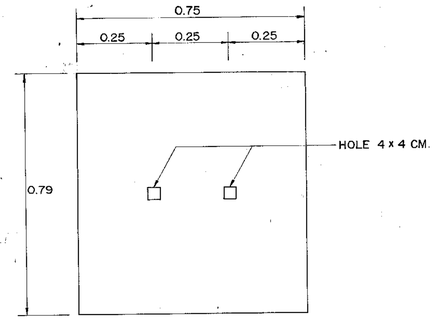


## R.C. COVER FOR R.C. DITCH TYPE "C"
SCALE 1 : 10

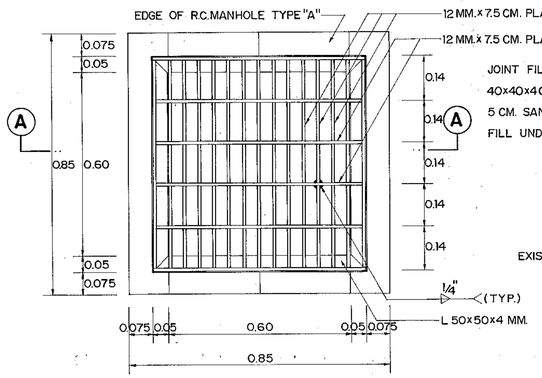


## PLAN OF MANHOLE TYPE "A" WITH STEEL COVER
SCALE 1 : 10

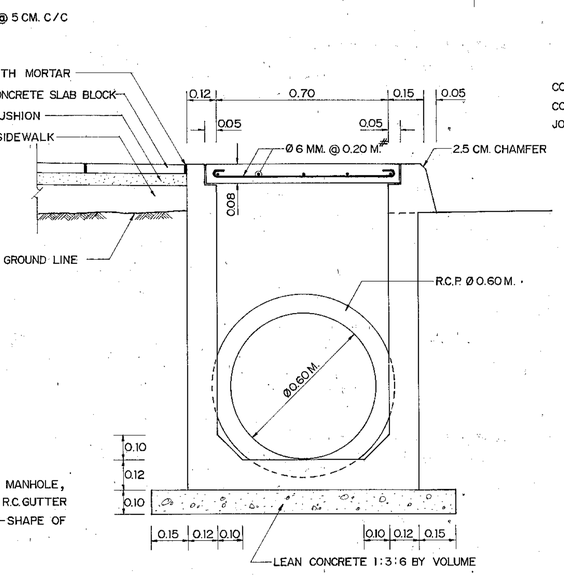


## SECTION (B) - (B) FOR R.C. DITCH TYPE "C"
SCALE 1 : 12.5

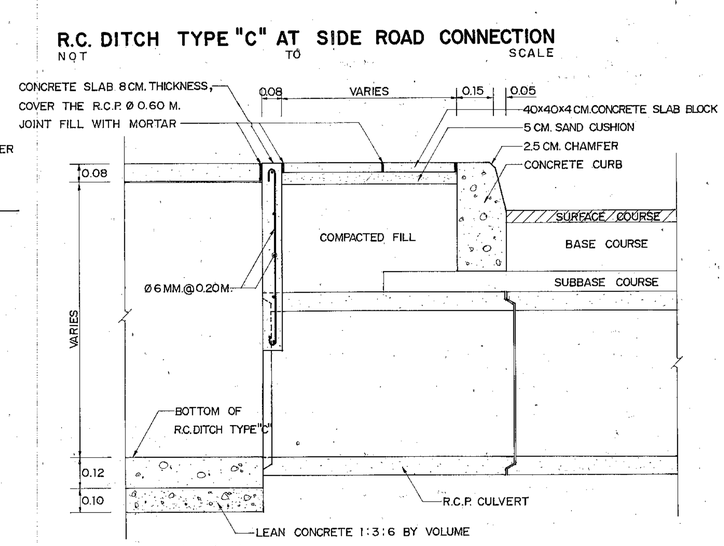


## SECTION (C) - (C) FOR R.C. DITCH TYPE "C"
SCALE 1 : 12.5

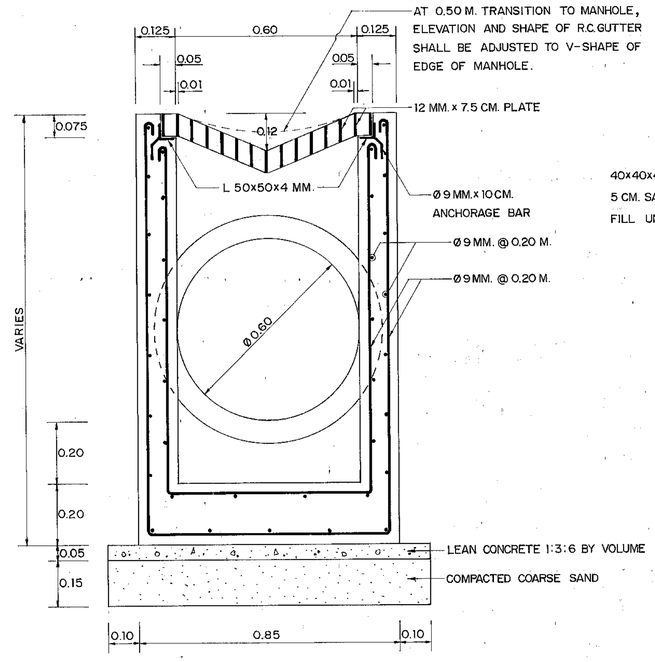


## SECTION (A) - (A) FOR MANHOLE TYPE "A"
SCALE 1 : 10

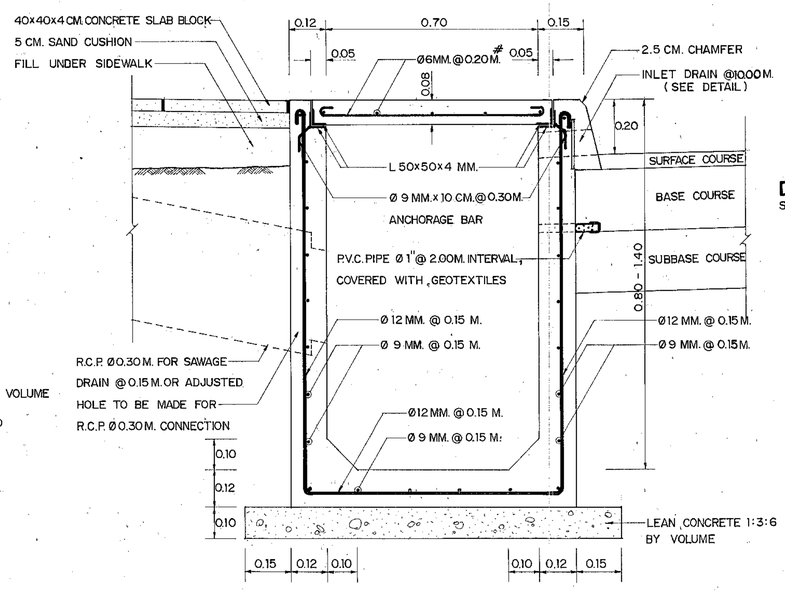


## SECTION OF R.C. DITCH TYPE "C"
SCALE 1 : 10

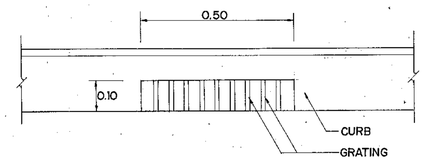


## DETAIL OF INLET DRAIN FOR R.C. DITCH TYPE "C"
SCALE 1 : 10

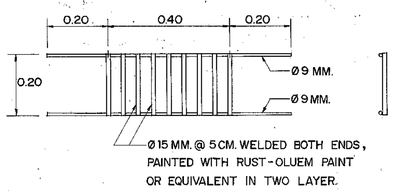


## STEEL GRATING DETAILS
SCALE 1 : 10

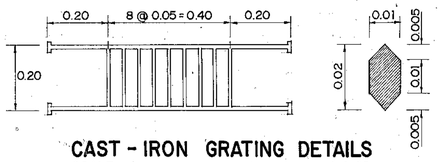


## CAST - IRON GRATING DETAILS
SCALE 1 : 10

## NOTES :

1. ALL DIMENSIONS ARE IN METERS UNLESS OTHERWISE INDICATED.
2. CONCRETE SHALL HAVE A MINIMUM ULTIMATE COMPRESSIVE STRENGTH OF 210 KSC. FOR 15x15x15 CM. CUBE AT 28 DAYS. AN APPROXIMATE MIX DESIGN PER CUBIC METER IS SUGGESTED AS FOLLOWS :

| | | |
|---|---|---|
| PORTLAND CEMENT TYPE 1 | 350 | KG. (MIN.) |
| SAND | 0.43 | $M^3$ |
| CRUSHED ROCK OR GRAVEL | 0.80 | $M^3$ |
| CONCRETE SLUMP | 10 | CM. (MAX.) |

3. REINFORCING STEEL SHALL CONFROM TO TIS. 20 GRADE SR 24
4. STRUCTURAL STEEL SHALL CONFROM TO TIS. 116 GRADE Fe 30 AND PAINTED WITH RUST-OLEUM PAINT OR EQUIVALENT IN TWO LAYERS.
5. FLAT PLATE STEEL SHALL CONFORM TO TIS. 55 GRADE SR 24
6. LAP LENGTH SHALL NOT BE LESS THAN 40 BAR DIAMETERS.
7. CLEAR CONCRETE COVER SHALL BE 3 CM. UNLESS OTHERWISE INDICATED.
8. MANHOLE TYPE "A" SHALL BE CONSTRUCTED AT 15.00 M. INTERVAL UNLESS CONNECTION ROAD WITH AMOUNT OF TRAFFICS, THE R.C. GUTTER SHALL BE VOID AT THE CONNECTION ROAD AND R.C.P. Ø 0.60 M. SHALL BE INSTALLED UNDER THE CONNECTION ROAD WITH MANHOLE TYPE "A" AT BOTH SIDES OF THE CONNECTION ROAD.
9. DEPTH OF R.C. GUTTER AT THE HALF DISTANCE BETWEEN MANHOLE TYPE "A" SHALL BE 7 CM. AND VARY TO BE 12 CM. AT BOTH EDGES OF MANHOLE OR THE LONGITUDINAL SLOPES SHALL NOT BE LESS THAN 0.60 %
10. JOINT IN R.C. GUTTER AND R.C. DITCH TYPE "C" SHALL BE SPACED AT 10.00 M. INTERVAL. WIDTH OF JOINT IS 1 CM. AND FILLED WITH MORTAR ( PORTLAND CEMENT : SAND ) RATIO 1 : 3 BY VOLUME.
11. THE LONGITUDINAL SLOPES OF R.C. DITCH TYPE "C" SHALL NOT BE LESS THAN 1 : 300.
12. P.V.C. PIPE SHALL CONFORM TO TIS. 17 CLASS 13.5
13. PAYMENT FOR R.C. DITCH TYPE "C" SHALL INCLUDE THE COST OF P.V.C. PIPE AND FILTER MATERIAL.

# KINGDOM OF THAILAND
MINISTRY OF TRANSPORT AND COMMUNICATIONS
DEPARTMENT OF HIGHWAYS

STANDARD DRAWING

R.C. DITCH DETAILS - II

| | | |
|---|---|---|
| DESIGNED : D.O.H. & CONSULTANTS | CHECKED : | DATE JULY 1994 |
| SUBMITTED : (DIRECTOR OF LOCATION & DESIGN DIVISION) | | SCALE AS SHOWN |
| APPROVED : (DIRECTOR GENERAL) | | DWG. NO. DS-407 |
| | | SHEET NO. 85 |

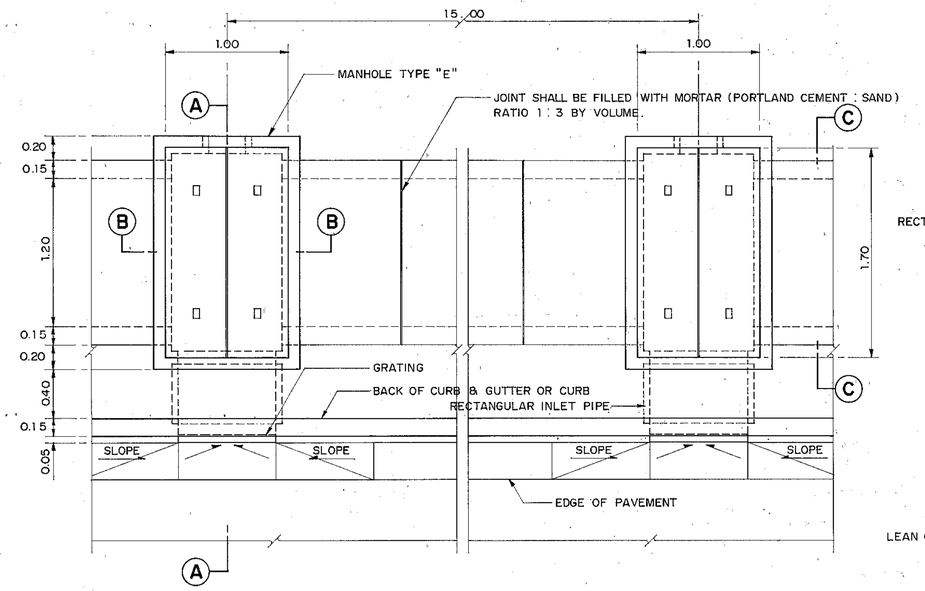


## STANDARD INLET MANHOLE & BOX CULVERT
SCALE 1 : 25

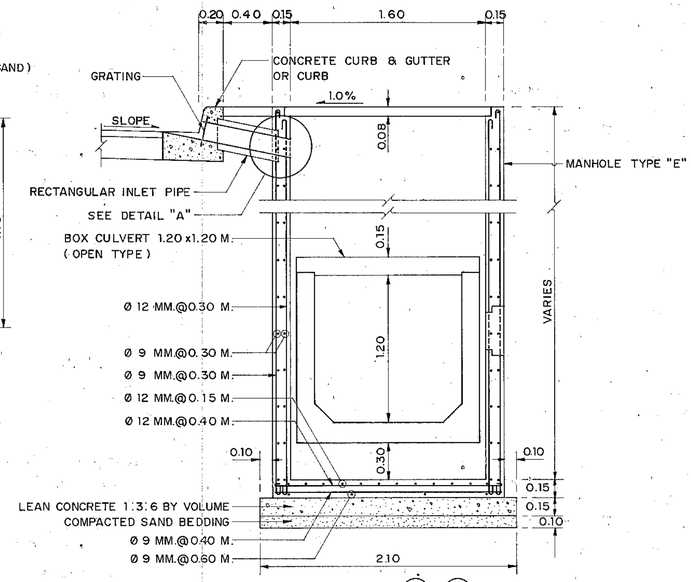


## SECTION (A)-(A)
SCALE 1 : 25

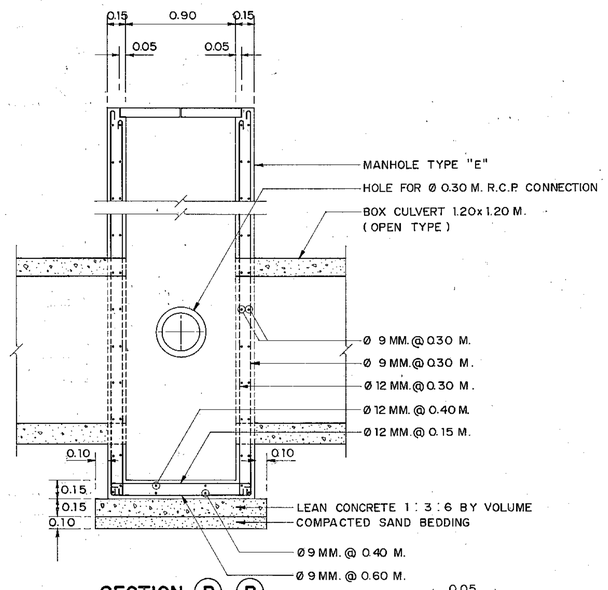


## SECTION (B)-(B)
SCALE 1 : 25

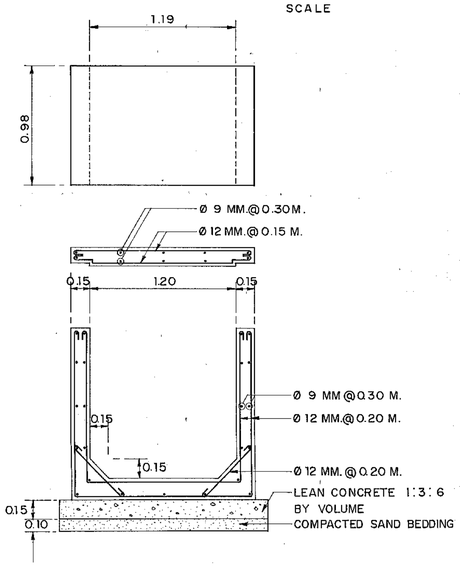


## SECTION (C)-(C)
SCALE 1 : 25

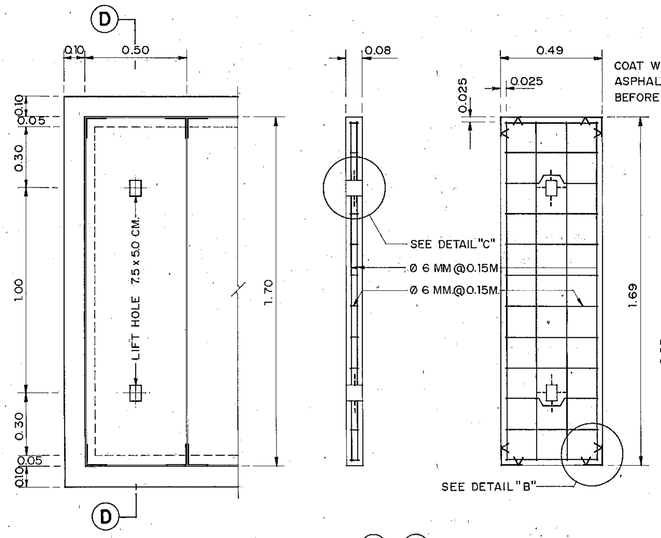


## SECTION (D)-(D)
SCALE 1 : 15

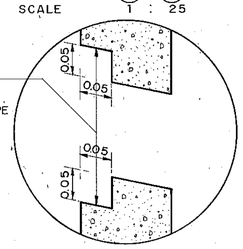


## DETAIL "A"
SCALE 1 : 5

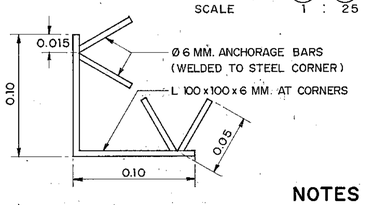


## DETAIL "B"
SCALE 1 : 2.5

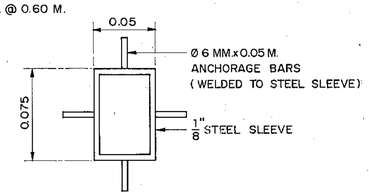


## DETAIL "C"
SCALE 1 : 2.5

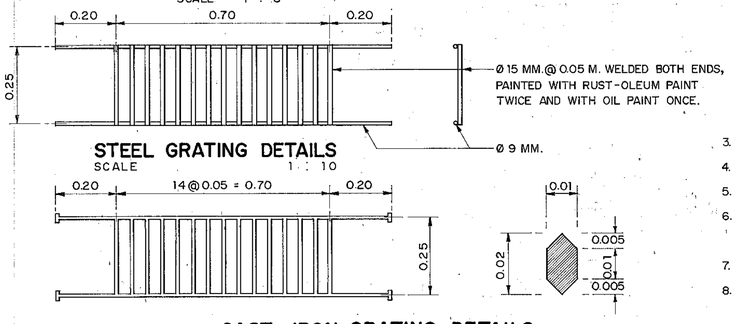


## STEEL GRATING DETAILS
SCALE 1 : 10




## CAST-IRON GRATING DETAILS
SCALE 1 : 10

## NOTES :

1. ALL DIMENSIONS ARE IN METERS UNLESS OTHERWISE INDICATED.
2. CONCRETE SHALL HAVE A MINIMUM ULTIMATE COMPRESSIVE STRENGTH OF 210 KSC. FOR 15x15x15 CM. CUBE AT 28 DAYS. AN APPROXIMATE MIX DESIGN PER CUBIC METER IS SUGGESTED AS FOLLOWS :

| | |
|---|---|
| PORTLAND CEMENT TYPE I | 350 KG. ( MIN. ) |
| SAND | 0.43 $M^3$ |
| CRUSHED ROCK OR GRAVEL | 0.86 $M^3$ |
| CONCRETE SLUMP | 10 CM. ( MAX. ) |

3. REINFORCING STEEL SHALL CONFORM TO TIS. 20 GRADE SR 24
4. STRUCTURAL STEEL SHALL CONFORM TO TIS. 116 GRADE Fe 30
5. FLAT PLATE STEEL SHALL CONFORM TO TIS. 55 GRADE SR 24
6. STRUCTURAL STEEL AND FLAT PLATE STEEL SHALL BE PAINTED WITH RUST - OLEUM PAINT OR EQUIVALENT TWICE AND WITH OIL PAINT ONCE.
7. CLEAR CONCRETE COVER SHALL BE 3 CM.
8. MANHOLES SHALL BE ARRANGED AT 15.00 M. (TYP.) INTERVAL OR AS DIRECTED BY THE ENGINEER.

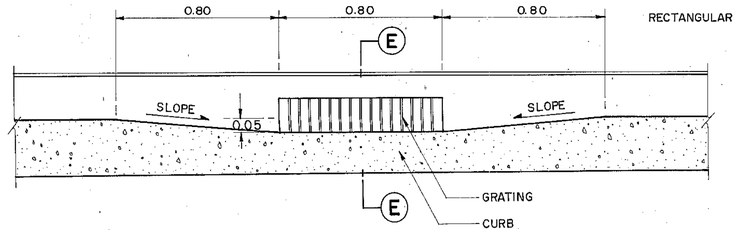


## FRONT VIEW OF GRATING
SCALE 1 : 15

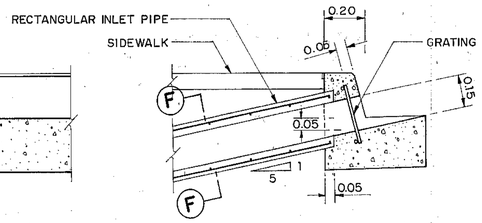


## SECTION (E)-(E)
SCALE 1 : 15

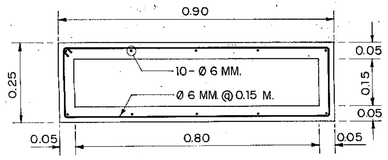


## SECTION (F)-(F)
SCALE 1 : 10

# KINGDOM OF THAILAND
## MINISTRY OF TRANSPORT AND COMMUNICATIONS
## DEPARTMENT OF HIGHWAYS

STANDARD DRAWING

DETAIL OF INLET AND MANHOLE TYPE "E" & BOX CULVERT ( OPEN - TYPE )

| | | |
|---|---|---|
| DESIGNED : D.O.H. & CONSULTANTS | CHECKED : | DATE JULY 1994 |
| SUBMITTED : (DIRECTOR OF LOCATION & DESIGN DIVISION) | | SCALE AS SHOWN |
| APPROVED : FOR (DIRECTOR GENERAL) | | DWG. NO. DS-501 |
| | | SHEET NO. 86 |

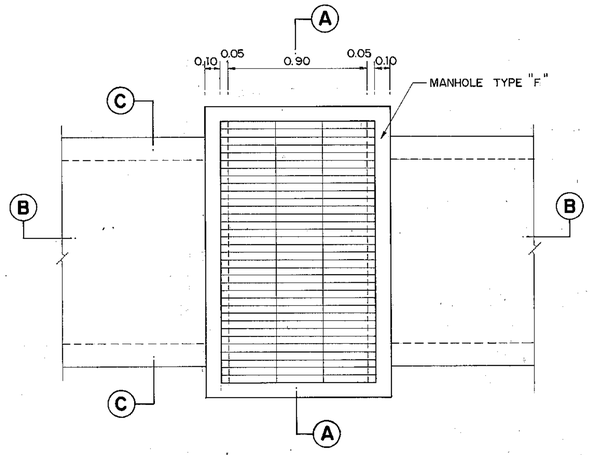


## MANHOLE AND BOX CULVERT (CLOSE TYPE)

SCALE 1 : 20

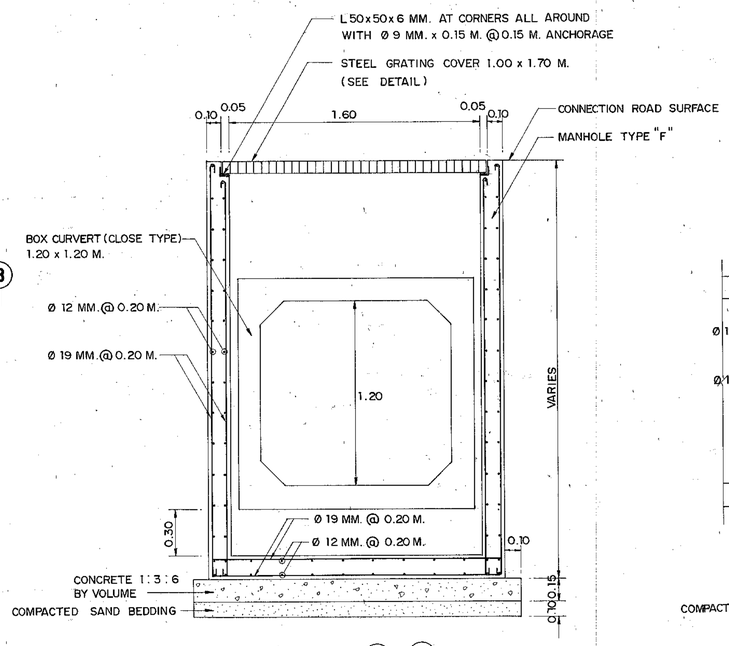


## SECTION (A)-(A)

SCALE 1 : 20

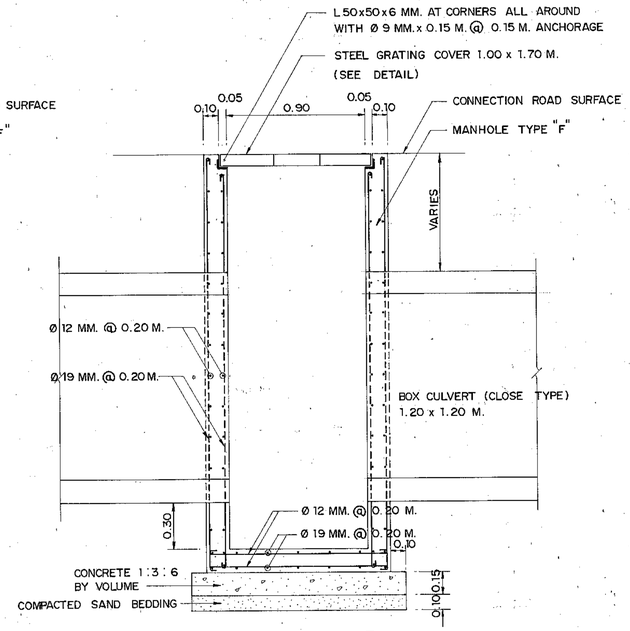


## SECTION (B)-(B)

SCALE 1 : 20

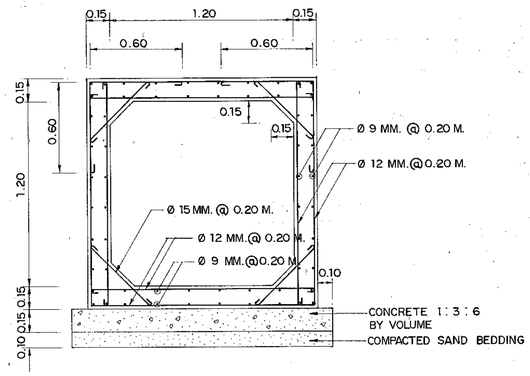


## SECTION (C)-(C)

SCALE 1 : 20

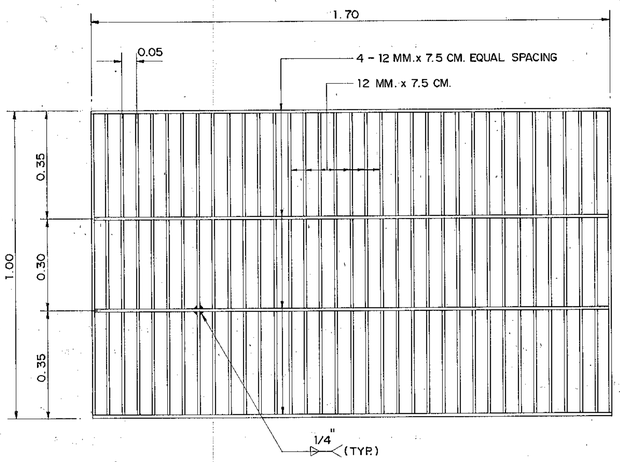


## STEEL GRATING COVER DETAILS

SCALE 1 : 10

## NOTES :

1. ALL DIMENSIONS ARE IN METERS UNLESS OTHERWISE INDICATED.
2. BOX CULVERT (CLOSE TYPE) SHALL BE USED FOR CONNECTION ROAD ONLY.
3. IF NECESSARY TO CONSTRUCT MANHOLE AT ROADWAY, MANHOLE COVER SHALL BE STEEL GRATING.
4. CONCRETE SHALL HAVE A MINIMUM ULTIMATE COMPRESSIVE STRENGTH OF 210 KSC. FOR 15 x 15 x 15 CM. CUBE AT 28 DAYS. AN APPROXIMATE MIX DESIGN PER CUBIC METER IS SUGGESTED AS FOLLOWS :

| | | |
|---|---|---|
| PORTLAND CEMENT TYPE 1 | 350 | KG. (MIN.) |
| SAND | 0.43 | $M^3$. |
| CRUSHED ROCK OR GRAVEL | 0.86 | $M^3$. |
| CONCRETE SLUMP | 10 | CM.(MAX.) |

5. REINFORCING STEEL SHALL CONFORM TO TIS. 20 GRADE SR 24.
6. STRUCTURAL STEEL SHALL CONFORM TO TIS. 116 GRADE Fe 30.
7. FLAT PLATE STEEL SHALL CONFORM TO TIS. 55 GRADE SR 24.
8. STRUCTURAL STEEL AND FLAT PLATE STEEL SHALL BE PAINTED WITH RUST-OLEUM PAINT OR EQUIVALENT TWICE AND WITH OIL PAINT ONCE.
9. CLEAR CONCRETE COVER SHALL BE 3 CM.
10. THE LENGTH OF BOX CULVERT (CLOSE TYPE) FOR PAYMENT SHALL BE MEASURED AT OUTER EDGE OF MANHOLE.

## PRE-CAST BOX CULVERT

1. THE CONTRACTOR CAN USE PRE-CAST REINFORCED CONCRETE BOX SECTION WHICH CONFORM TO ASTM DESIGNATION C 789M-83 OR AASHTO NO. M259-811 INSTEAD OF THE CAST IN-PLACE BOX CULVERT.
2. DESIGN REQUIREMENTS
   - 2.1 THE DESIGN EARTH COVER SHALL BE THE MAXIMUM VALUE AT FIELD CONDITION BUT NOT LESS THAN 0.60 M.
   - 2.2 BOX CULVERT SIZE SHALL BE 1.20 x 1.20 M. WITH THICKNESS NOT LESS THAN 0.125 M.
   - 2.3 THE CIRCUMFERENTIAL REINFORCEMENT OF BOX CULVERT AT ROADWAY SHALL BE CALCULATED FROM WEIGHT OF BACKFILL AND HS 20-44 TRUCK LOADING (FROM THE STANDARD SPECIFICATION FOR HIGHWAY BRIDGES - AASHTO). BUT UNDER SIDEWALK, THE CIRCUMFERENTIAL REINFORCEMENT SHALL BE CALCULATED FROM WEIGHT OF BACKFILL ONLY.
   - 2.4 REINFORCEMENT STEEL SHALL CONFORM TO ASTM A-82 OR A-496.
   - 2.5 CONCRETE SHALL HAVE A MINIMUM ULTIMATE COMPRESSIVE STRENGTH OF 280 KSC. FOR 15 x 15 x 15 CM. CUBE AT 28 DAYS.
3. LENGTH OF THE PRE-CAST BOX CULVERT SHALL BE NOT LESS THAN 1.00 M.
4. JOINT OF PRE-CAST BOX CULVERT SHALL BE TONGUE AND GROOVE TYPE WHICH INTERIOR JOINT MUST BE SMOOTH, NOT OBSTRUCT TO FLOW OF WATER.
5. JOINT SHALL BE FILLED WITH MORTAR (PORTLAND CEMENT : SAND) RATIO 1 : 3 BY VOLUME.

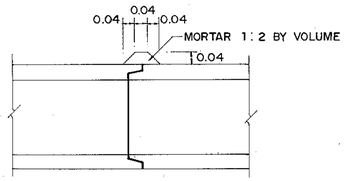


6. METHOD OF PLACING AND BEDDING OF PRE-CAST BOX CULVERT SHALL BE THE SAME AS THE CAST IN-PLACE BOX CULVERT.
7. THE LONGITUDINAL REINFORCEMENT SHALL HAVE DIAMETER NOT LESS THAN 5 MM. WITH SPACING NOT MORE THAN 15 CM.

# KINGDOM OF THAILAND

MINISTRY OF TRANSPORT AND COMMUNICATIONS
DEPARTMENT OF HIGHWAYS

STANDARD DRAWING

DETAIL OF INLET AND MANHOLE TYPE "F"
& BOX CULVERT (CLOSE-TYPE)

| | | |
|---|---|---|
| DESIGNED : D.O.H. & CONSULTANTS | CHECKED : | DATE JULY 1994 |
| SUBMITTED : (DIRECTOR OF LOCATION & DESIGN DIVISION) | | SCALE AS SHOWN |
| APPROVED : FOR (DIRECTOR GENERAL) | | DWG. NO. DS-502 |
| | | SHEET NO. 37 |

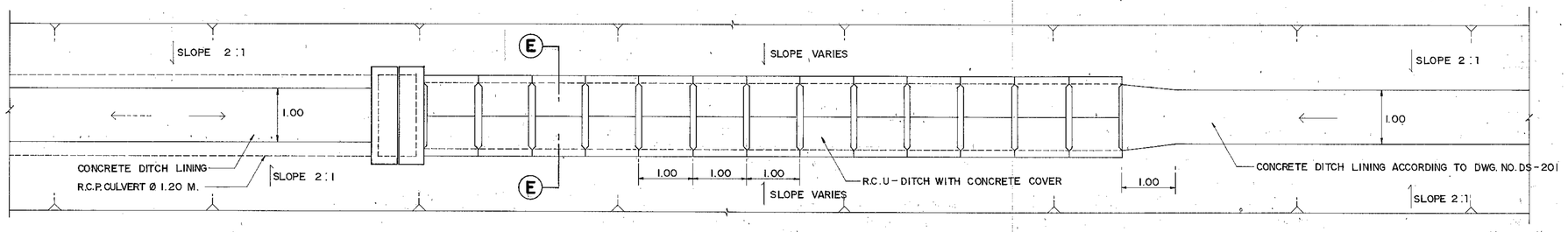


## PLAN
SCALE 1 : 50

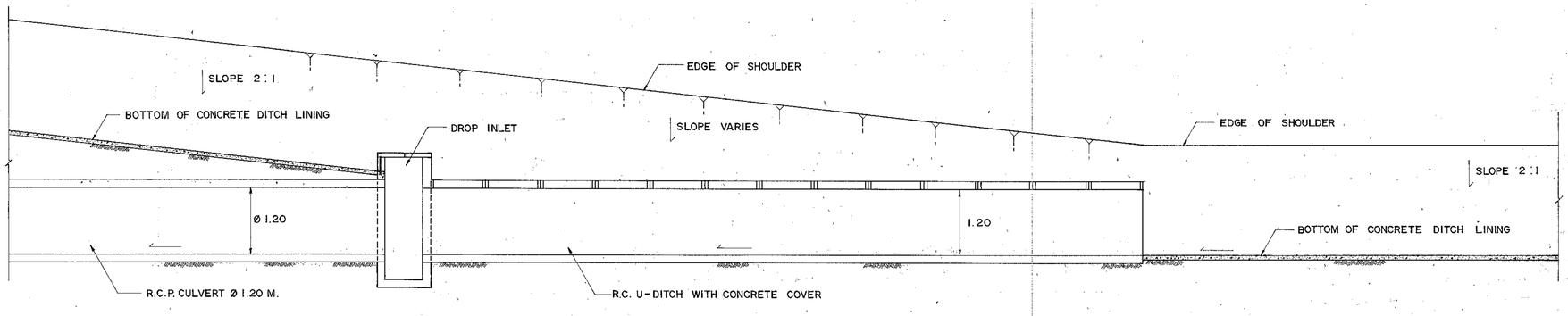


## SIDE ELEVATION
SCALE 1 : 50

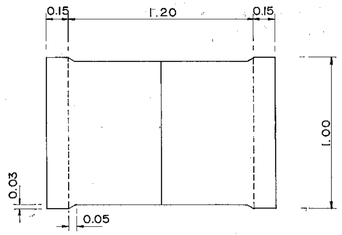


## PLAN

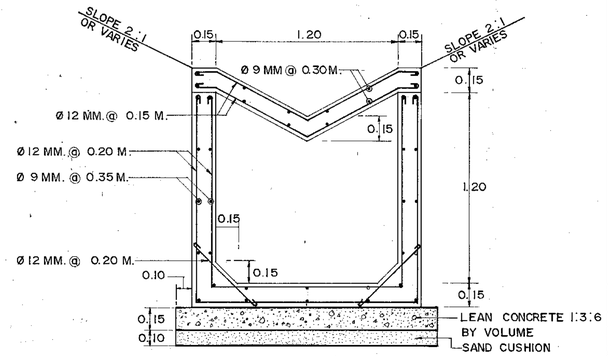


## SECTION
## R.C. U-DITCH WITH CONCRETE COVER
SCALE 1 : 20

## NOTES :

1. ALL DIMENSIONS ARE IN METERS UNLESS OTHERWISE INDICATED.
2. THIS DRAWING SHALL BE USED WHERE THE DRAINAGE WITH CONCRETE DITCH LINING AT MEDIAN ( WITH SIDE SLOPE 1.5 : 1 OR FLATTER ) CAN NOT BE CONSTRUCTED.
3. SLOPE OF CULVERT SHALL BE 1 : 1,000 OR STEEPER.
4. SLOPE OF R.C. U-DITCH COVER SHALL BE ADJUSTED TO MEET THE SIDE SLOPES.
5. R.C.P. CULVERT 1-Ø 1.20 M. SHALL BE INSTALLED WITH DROP INLET AT 25.00 M. INTERVAL.
6. JOINT IN R.C. U-DITCH AND CONCRETE DITCH LINING SHALL BE SPACED AT 10.00 M. INTERVAL. WIDTH OF THE JOINT IS 1 CM. AND FILLED WITH MORTAR ( PORTLAND CEMENT : SAND ) RATIO 1 : 3 BY VOLUME
7. CONCRETE SHALL HAVE A MINIMUM ULTIMATE COMPRESSIVE STRENGTH OF 210 KSC. FOR 15 x 15 x 15 CM. CUBE AT 28 DAYS. AN APPROXIMATE MIX DESIGN PER CUBIC METER IS SUGGESTED AT FOLLOWS :

| | | |
|---|---|---|
| PORTLAND CEMENT TYPE 1 | 350 | KG. (MIN.) |
| SAND | 0.43 | $M^3$ |
| CRUSHED ROCK OR GRAVEL | 0.86 | $M^3$ |
| CONCRETE SLUMP | 10 | CM. (MAX.) |

8. REINFORCING STEEL SHALL CONFORM TO TIS. 20 GRADE SR 24.

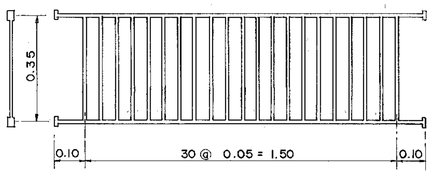


## CAST-IRON GRATING DETAILS
SCALE 1 : 10

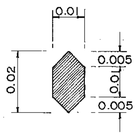


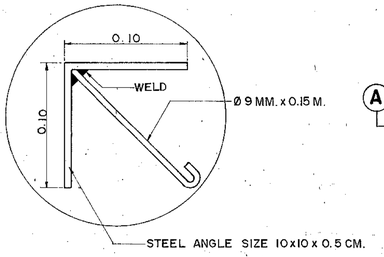


## STEEL CORNER GUARD
SCALE 1 : 2.5

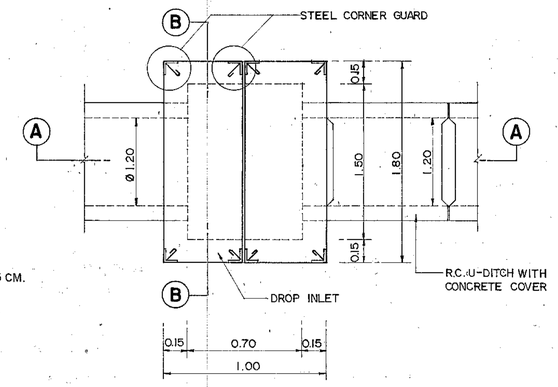


## PLAN DROP INLET
SCALE 1 : 30

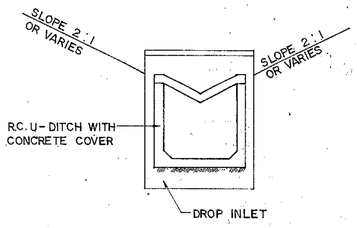


## SECTION (E) - (E)
SCALE 1 : 50

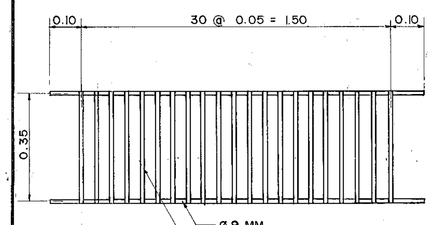


## STEEL GRATING DETAILS
SCALE 1 : 10

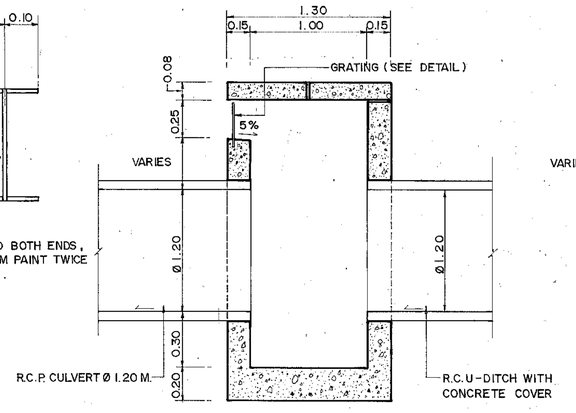


## SECTION (A) - (A)
SCALE 1 : 30

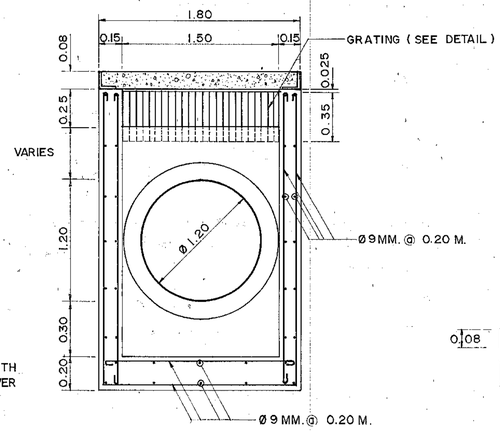


## SECTION (B) - (B)
SCALE 1 : 30

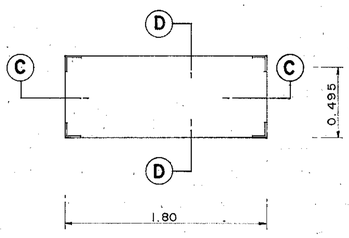


## PLAN
SCALE 1 : 30

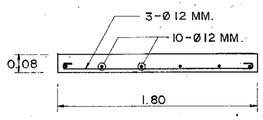


## SECTION (C) - (C)
SCALE 1 : 30

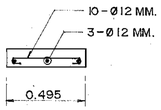


## SECTION (D) - (D)
SCALE 1 : 30

# KINGDOM OF THAILAND
## MINISTRY OF TRANSPORT AND COMMUNICATIONS
## DEPARTMENT OF HIGHWAYS

STANDARD DRAWING

## DROP INLET & R.C.U-DITCH FOR BRIDGE DRAINAGE

| | | |
|---|---|---|
| DESIGNED : D.O.H. & CONSULTANTS | CHECKED : | DATE JULY 1994 |
| SUBMITTED : (DIRECTOR OF LOCATION & DESIGN DIVISION) | | SCALE AS SHOWN |
| APPROVED : FOR (DIRECTOR GENERAL) | | DWG. NO. DS-503 |
| | | SHEET NO. 88 |

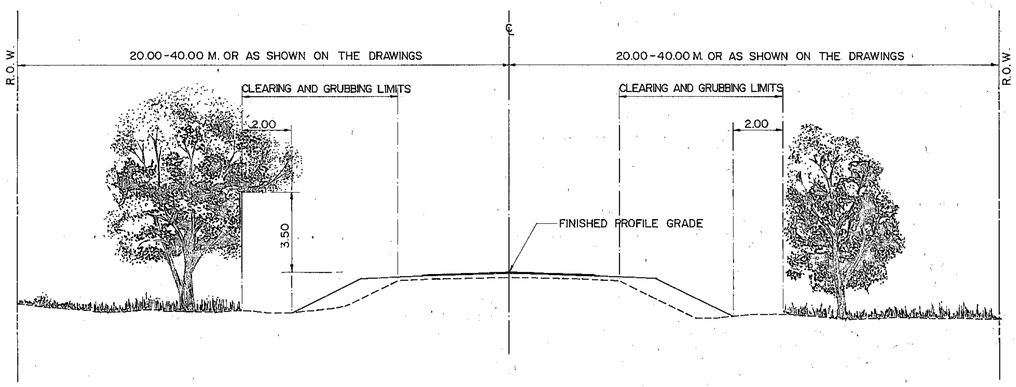


## CLEARING AND GRUBBING FOR REHABILITATION OR RECONSTRUCTION PROJECT

NOT TO SCALE

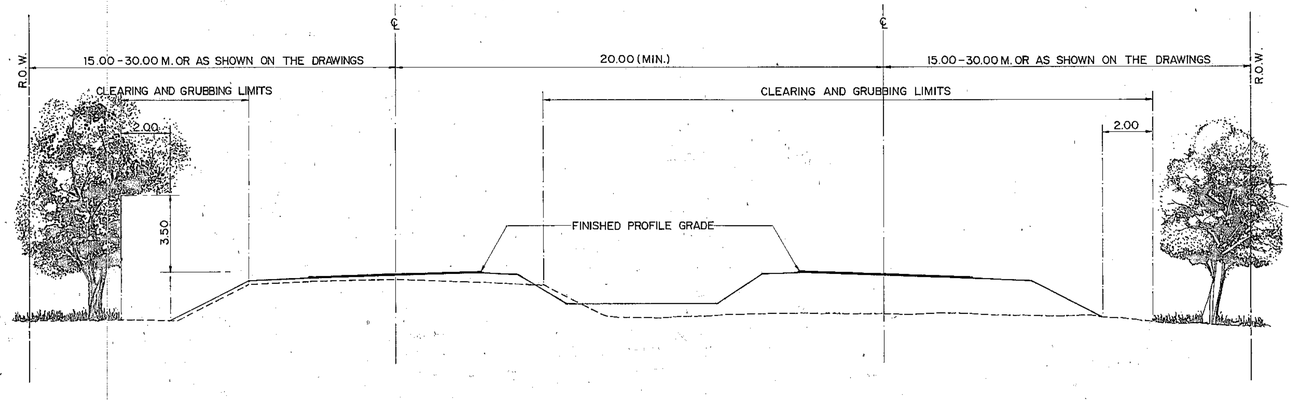


## CLEARING AND GRUBBING FOR REHABILITATION (OR RECONSTRUCTION) AND CONSTRUCTION PROJECT

NOT TO SCALE

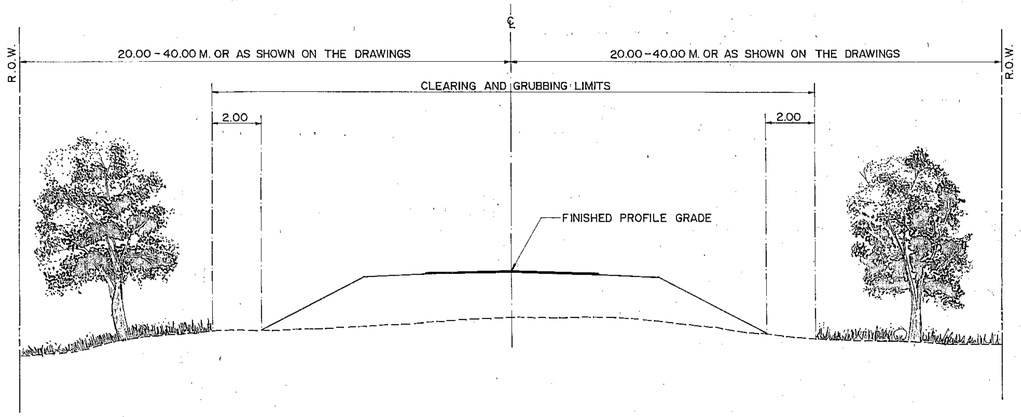


## CLEARING AND GRUBBING FOR CONSTRUCTION PROJECT

NOT TO SCALE

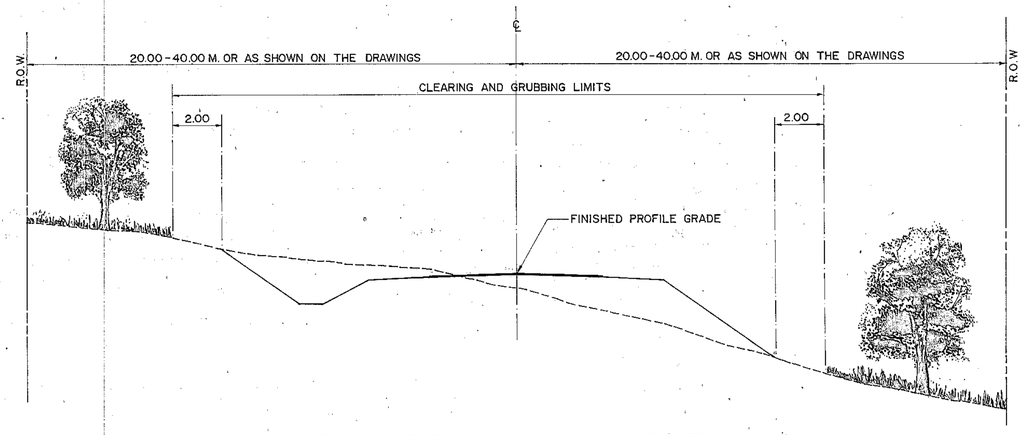


## CLEARING AND GRUBBING AT CUT-SECTION

NOT TO SCALE

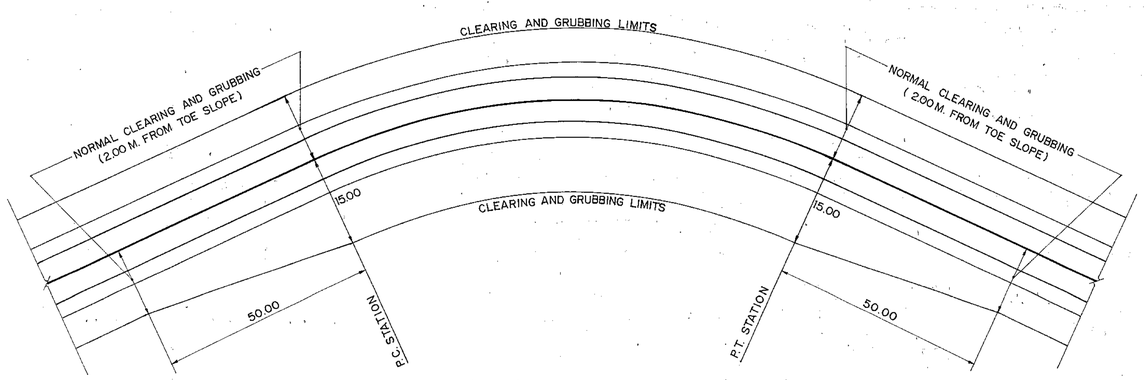


## CLEARING AND GRUBBING AT HORIZONTAL CURVE

NOT TO SCALE

## NOTES :

1. ALL DIMENSIONS ARE IN METERS UNLESS OTHERWISE INDICATED.
2. AT LOCATIONS WHERE OVERHANGING TREE BRANCHES, SHRUBS, BUSHES, ETC. SPREAD OVER CLEARING AND GRUBBING AREAS, THEY SHALL BE CUT TO PROVIDE A 3.50 M. CLEARANCE OVER FINISHED PROFILE GRADE.
3. SIDE DITCHES, CUT AND FILL SLOPES DIMENSIONS SHALL CONFORM TO THE TYPICAL CROSS-SECTION DRAWING.
4. CLEARING AND GRUBBING IN RESIDENTIAL AREAS SHALL CONFORM TO THE DRAWING FOR THAT PARTICULAR PROJECT OR AS DIRECTED BY THE ENGINEER.

**KINGDOM OF THAILAND**
**MINISTRY OF TRANSPORT AND COMMUNICATIONS**
**DEPARTMENT OF HIGHWAYS**

STANDARD DRAWING

CLEARING AND GRUBBING

| | | |
|---|---|---|
| DESIGNED : D.O.H. & CONSULTANTS | CHECKED : | DATE JULY 1994 |
| SUBMITTED : (DIRECTOR OF LOCATION & DESIGN DIVISION) | | SCALE NONE |
| | | DWG. NO. MD-101 |
| APPROVED : (DIRECTOR GENERAL) | | SHEET NO. 89 |

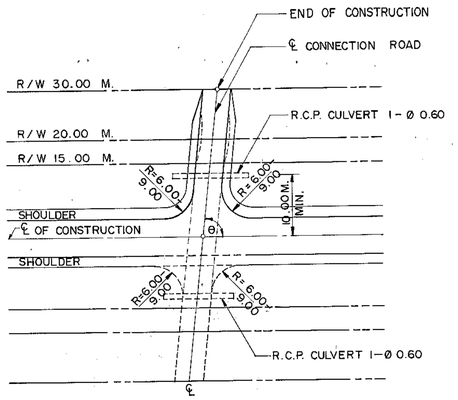


## CONNECTION ROAD, θ BETWEEN 80°-90°

NOT TO SCALE

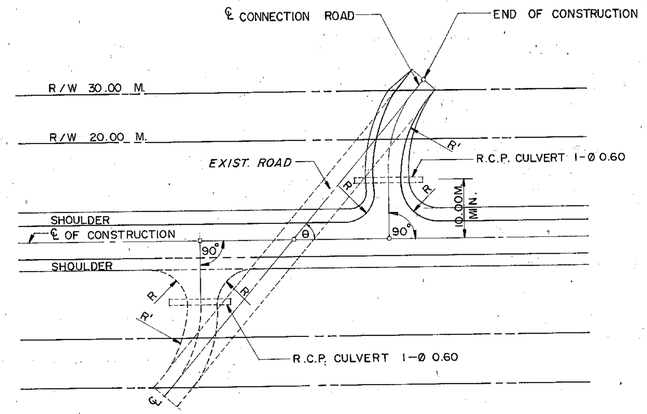


RIGHT OF WAY 20.00 M. R = 6.00 M. R' = 8.00 M., RIGHT OF WAY 30.00 M. R = 6.00 M. R' = 15.00 M.

## CONNECTION ROAD, θ BETWEEN 45°-60°

NOT TO SCALE

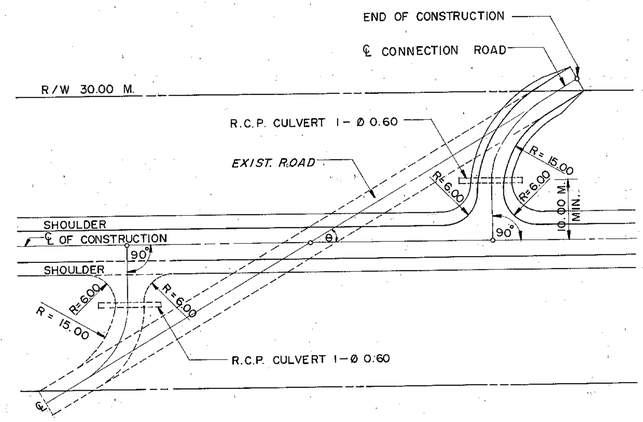


## CONNECTION ROAD, θ LESS THAN 45°

NOT TO SCALE

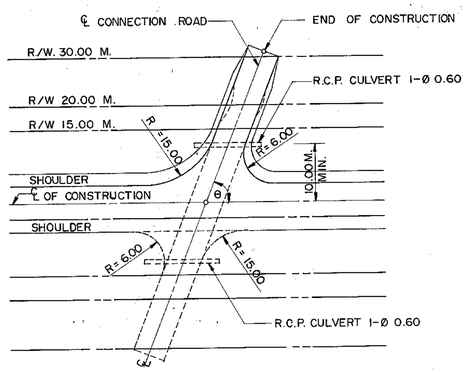


## CONNECTION ROAD, θ BETWEEN 60°-80°

NOT TO SCALE

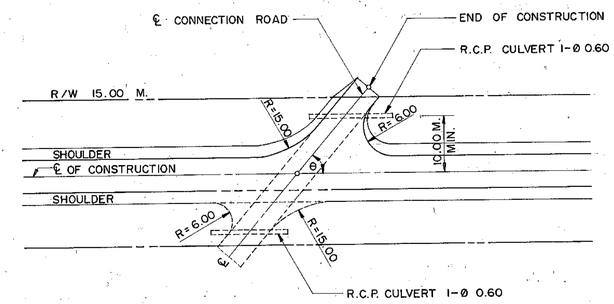


## CONNECTION ROAD, θ BETWEEN 45°-60°

NOT TO SCALE

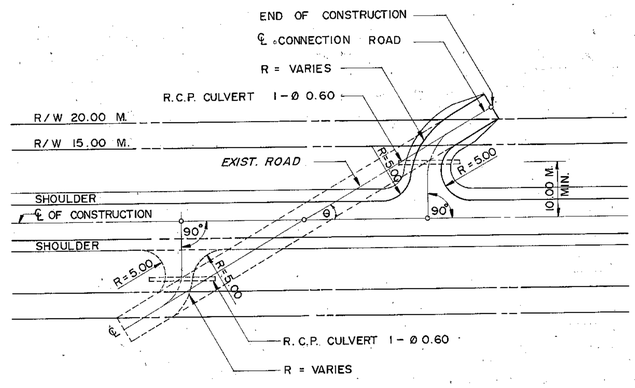


## CONNECTION ROAD, θ LESS THAN 45°

NOT TO SCALE

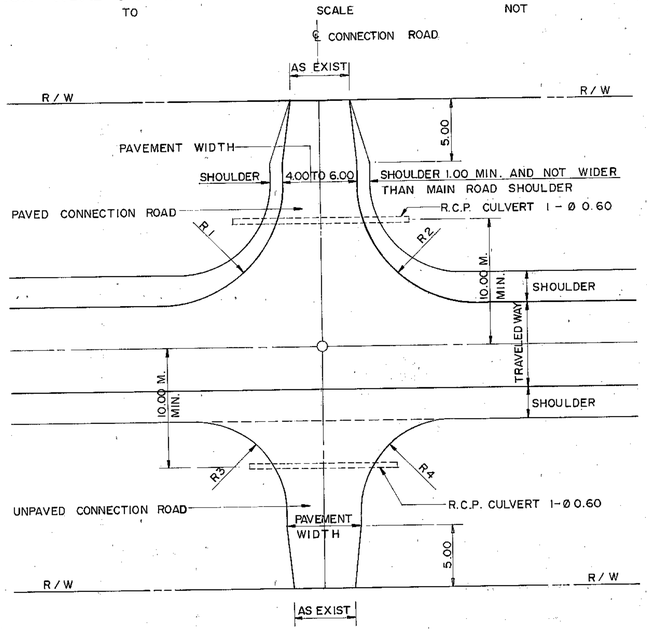


## CONNECTION ROAD PLAN

NOT TO SCALE

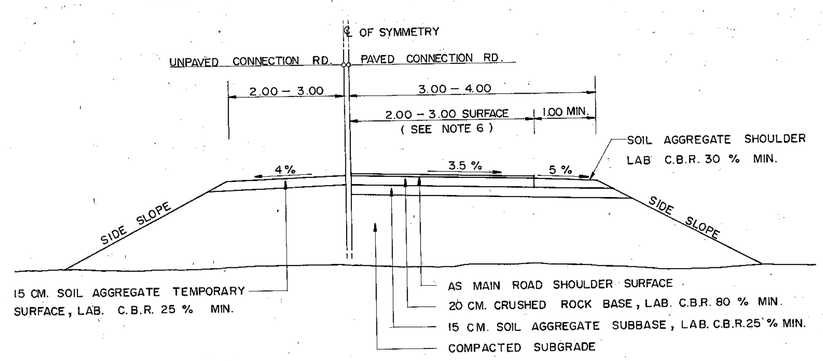


## TYPICAL CROSS-SECTION FOR PAVED AND UNPAVED CONNECTION ROAD

NOT TO SCALE

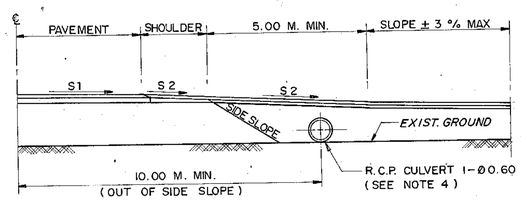


## CONNECTION ROAD SECTION

NOT TO SCALE

## NOTES :

1. ALL DIMENSIONS ARE IN METERS UNLESS OTHERWISE INDICATED.
2. IN GENERAL, PUBLIC SIDE ROAD CONNECTS THE HIGHWAY TO A VILLAGE, POPULATED AREA, MONASTERY, GOVERNMENT OFFICE, PUBLIC UTILITY OR SOME PLACES OF IMPORTANCE.
3. THE PAVEMENT STRUCTURE OF EACH CONNECTION ROAD SHALL BE AS RECOMMENDED IN THE DRAWING.
4. CHANGE IN SIZE AND NUMBER OF PIPE CULVERT SHALL REQUIRE APPROVAL OF THE ENGINEER. LOCATION AND LENGTH OF PIPE CULVERT DURING CONSTRUCTION SHALL BE AS DIRECTED BY THE ENGINEER IN THE FIELD.
5. THE CONSTRUCTION OF EACH CONNECTION ROAD SHALL END AT R/W LIMIT OR AS SHOWN ON THE DRAWING.
6. THE WIDTH OF PAVED SURFACE OF THE CONNECTION ROAD SHALL BE THE SAME AS OR AS THE EXISTING PAVED CONNECTION ROAD OR AS SHOWN ON THE DRAWING OR AS DIRECTED BY THE ENGINEER BUT SHALL NOT BE WIDER THAN 6.00 M.
7. THE INTERSECTIONS NOT SHOWN ON THE DRAWINGS SHALL REQUIRE PLANS SUBMITTED TO THE ENGINEER FOR APPROVAL BEFORE CONSTRUCTION.
8. FOR SIDE ROAD CONNECTED TO A SMALL VILLAGE WITH LOW TRAFFIC, THE FOLLOWING SHALL APPLY:
   a. THE CONNECTION ROAD SHALL BE UNPAVED ROAD TO THE R/W LIMIT WITH A RECOMMENDED PAVEMENT STRUCTURE AS SHOWN ON THE DRAWING.
   b. THE ROADWAY WIDTH SHALL BE AS SHOWN ON THE DRAWING OR AS DIRECTED BY THE ENGINEER.

**KINGDOM OF THAILAND**
MINISTRY OF TRANSPORT AND COMMUNICATIONS
DEPARTMENT OF HIGHWAYS

STANDARD DRAWING

CONNECTION ROAD DETAILS

| | | |
|---|---|---|
| DESIGNED: D.O.H. & CONSULTANTS | CHECKED: | DATE JULY 1994 |
| SUBMITTED: (DIRECTOR OF LOCATION & DESIGN DIVISION) | | SCALE NONE |
| | | DWG. NO. MD-201 |
| APPROVED: (DIRECTOR GENERAL) | | SHEET NO. 90 |

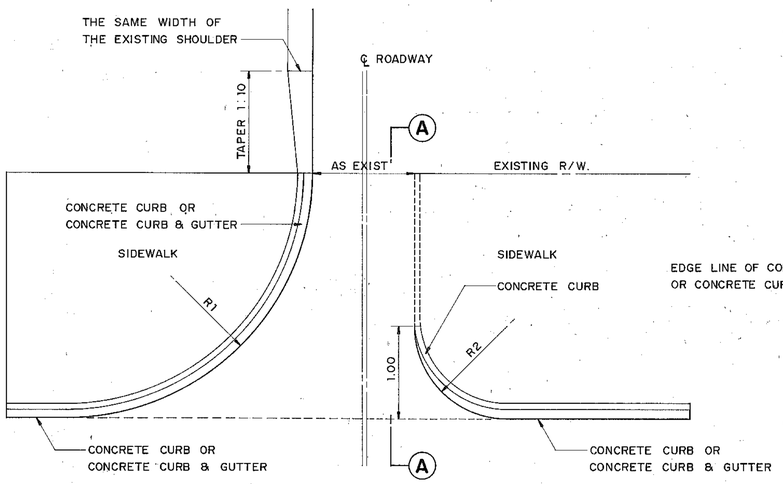


R1 = 5.00 M. - 9.00 M. } ACCORDING TO TRAFFIC VOLUME AND AVAILABLE SPACE
R2 = 2.50 M. - 3.50 M. } OR AS INDICATED IN THE PLAN & PROFILE DRAWING

## PLAN OF PUBLIC SIDE ROAD & PRIVATE DRIVE AT SIDEWALK
NOT TO SCALE

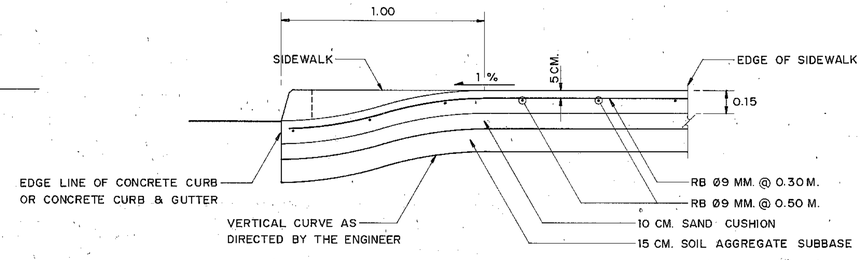


## SECTION (A) - (A)
## R.C. CONRETE PAVEMENT OF SIDE ROAD & PRIVATE DRIVE
NOT TO SCALE

## CRITERIA AND LIMITS OF CONSTRUCTION

1. THE PROJECT ENGINEER SHALL LIST THE CONNECTION ROADS THAT NEED TO BE RECONSTRUCTED AT THE BEGINNING OF THE PROJECT.
2. THE PAYMENT FOR CONSTRUCTION OF THE PUBLIC SIDE ROADS (FROM THE LIST OF ITEM. 1 ) ARE
   - 2.1 THE DRAINAGE STRUCTURE ( EXTENDED OR NEW STRUCTURE )
   - 2.2 THE PAVEMENT STRUCTURE, THAT SHOULD BE AS GOOD AS, OR BETTER THAN THE EXISTING PAVEMENT STRUCTURE.
3. THE PAYMENT FOR PRIVATE DRIVE ( FROM THE LIST OF ITEM. 1 ) ARE
   - 3.1 IN CASE OF GETTING PERMISSION FROM THE DOH.
     - 3.1.1 THE DRAINAGE STRUCTURE ( EXTENDED OR NEW STRUCTURE )
     - 3.1.2 FOR THE PAVEMENT STRUCTURE, DOH. SHALL CONSTRUCT THE TEMPORARY PAVEMENT DURING THE CONSTRUCTION OF THE HIGHWAY. WHEN THE PROJECT IS COMPLETED, THE OWNER OF EACH PRIVATE DRIVE SHALL PAY FOR THE PAVEMENT STRUCTURE FOR HIMSELF.
   - 3.2 IN CASE OF NOT GETTING PERMISSION FROM THE DOH.
     - 3.2.1 DOH. SHALL PAY FOR THE DRAINAGE STRUCTURE ONLY WHEN THE PRIVATE DRIVE INTERFERES WITH THE DRAINAGE SYSTEM OF THE HIGHWAY.
     - 3.2.2 ALL OF THE OWNERS OF THE PRIVATE DRIVED ARE REQUIRED TO SEEK THE PERMISSION FROM THE DOH. OTHERWISE, ILLEGAL PRIVATE DRIVES SHALL BE REMOVED ACCORDING TO THE ITEM 33 OF THE REVOLUTION ANNOUNCEMENT NO. 295
4. EVERY NEW PRIVATE DRIVES AFTER THE START OF THE PROJECT IS NEEDED TO GET THE PERMISSION FROM THE DOH. BEFORE THE CONNECTION CAN BE STARTED.
5. THE DOH. BY THE LOCATION AND DESIGN DIVISION SHALL DIRECT :
   - 5.1 THE ARRANGMENT OF THE DRAINAGE STRUCTURE.
   - 5.2 THE LIMIT OF CONSTRUCTION CONNECTION ROADS.
   - 5.3 THE TYPE AND QUANTITIES OF PAVEMENT STRUCTURE.

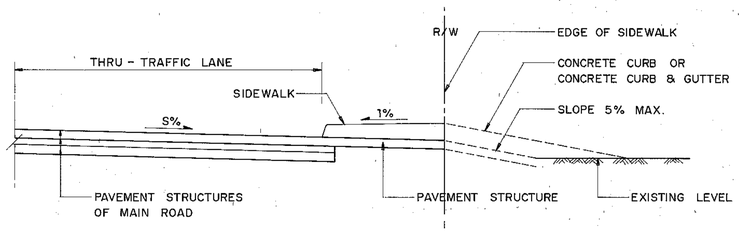


## TYPICAL SIDE ROAD AT SIDEWALK ( PROFILE )
NOT TO SCALE

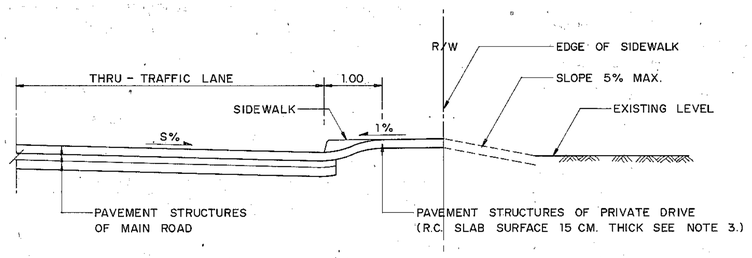


## TYPICAL PRIVATE DRIVE AT SIDEWALK ( PROFILE )
NOT TO SCALE

## NOTES :

1. ALL DIMENSION ARE IN METERS UNLESS OTHERWISE INDICATED.
2. IN GENERAL, PUBLIC SIDE ROAD CONNECTS THE HIGHWAY TO THE VILLAGE, POPULATED AREA, MONASTERY, GOVERNMENT OFFICE, PUBLIC UTILITY OR SOME PLACES OF IMPORTANCE WHILE "PRIVATE DRIVE" IS THE PRIVATE CONNECTION ROAD FOR PRIVATE HOUSE.
3. CONCRETE SHALL HAVE A MINIMUM ULTIMATE COMPRESSIVE STRENGTH OF 325 KSC. FOR 15x15x15 CM. CUBE AT 28 DAYS. AN APPROXIMATE MIX DESIGN PER CUBIC METER IS SUGGESTED AS FOLLOWS :

| | |
|---|---|
| PORTLAND CEMENT TYPE 1 | 350 KG. (MIN.) |
| SAND | 0.43 $M^3$ |
| CRUSHED ROCK OR GRAVEL | 0.86 $M^3$ |
| CONCRETE SLUMP | 10 CM. (MAX.) |

4. REINFORCING STEEL SHALL BE ROUND BARS CONFORMING TO TIS 20 GRADE SR24.
5. CLEAR CONCRETE COVER SHALL BE 5 CM.
6. FOR THE PRIVATE DRIVE THAT NEEDS TO BE CONCRETE PAVEMENT, REFER TO SECTION (A) - (A)

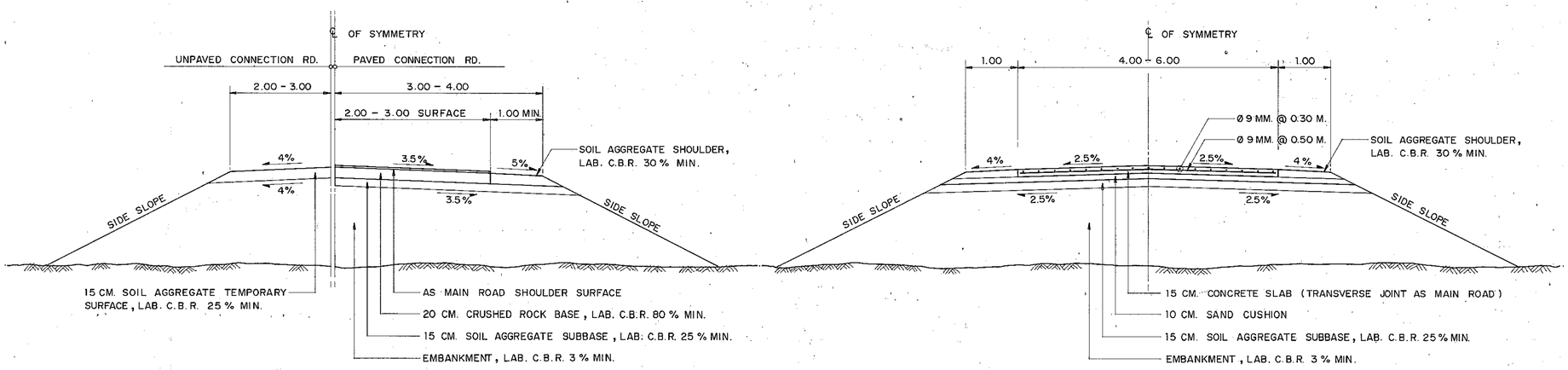


## TYPICAL CROSS - SECTION FOR SIDE ROAD & PRIVATE DRIVE CONNECTION
NOT TO SCALE

# KINGDOM OF THAILAND
## MINISTRY OF TRANSPORT AND COMMUNICATIONS
## DEPARTMENT OF HIGHWAYS

STANDARD DRAWING

SIDE ROAD & PRIVATE DRIVE DETAILS

| | | |
|---|---|---|
| DESIGNED : D.O.H & CONSULTANTS | CHECKED : | DATE JULY 1994 |
| SUBMITTED : (DIRECTOR OF LOCATION & DESIGN DIVISION) | | SCALE NONE |
| APPROVED : (DIRECTOR GENERAL) | | DWG. NO. MD-202 |
| | | SHEET NO. 91 |

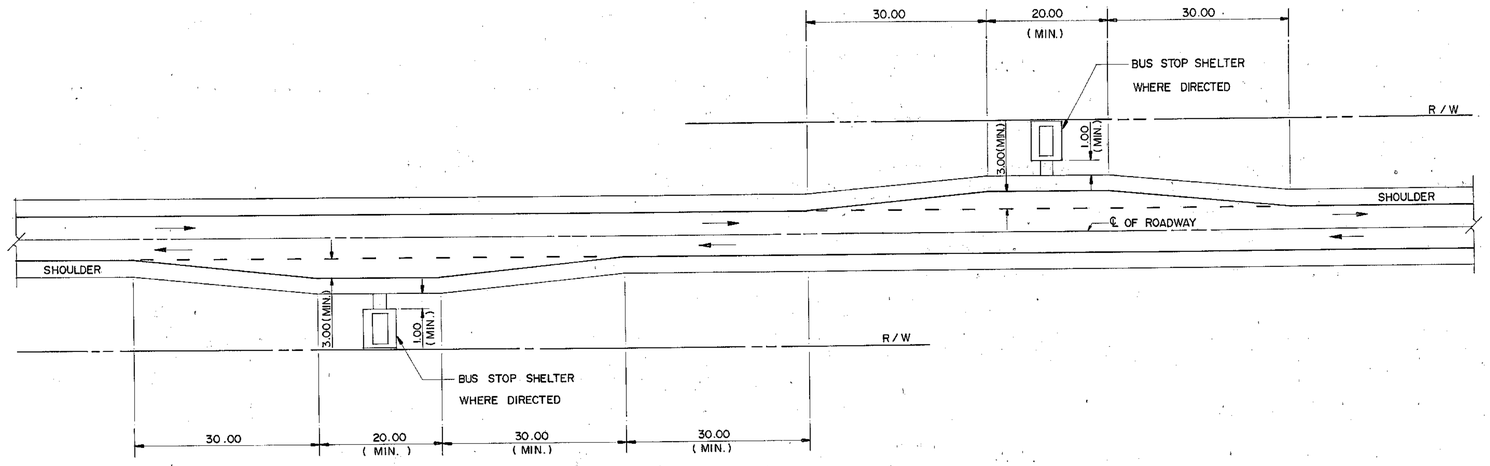


## GENERAL PLAN FOR BUS STOP

NOT TO SCALE

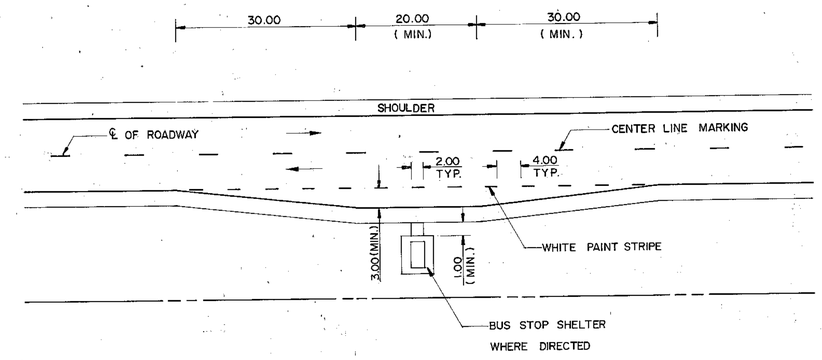


## DETAILED LAYOUT

NOT TO SCALE

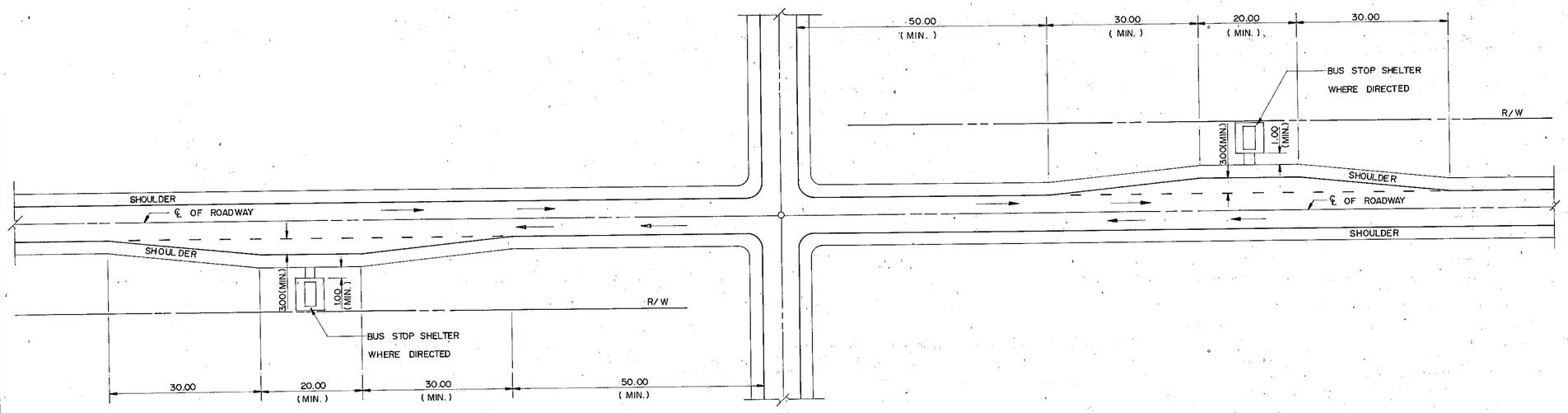


## PLAN FOR BUS STOP NEAR INTERSECTION

NOT TO SCALE

## NOTES :

1. ALL DIMENSIONS ARE IN METERS UNLESS OTHERWISE INDICATED.
2. BUS STOP SHALL BE CONSTRUCTED AT LOCATIONS AS SHOWN ON THE DRAWINGS OR AS DIRECTED BY THE ENGINEER.
3. CROSS SLOPE AND PAVEMENT OF THE BUS STOP ARE THE SAME AS FOR THE MAIN ROADWAY.
4. DIMENSIONS INDICATED BY " MIN." SHALL BE DIRECTED BY THE ENGINEER DEPENDING ON NUMBER AND SIZE OF BUSES, AND NUMBER OF PASSENGERS.

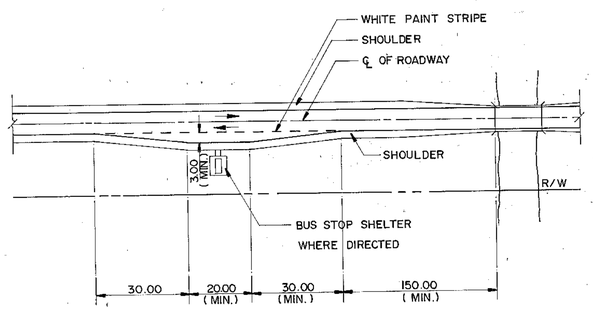


## PLAN FOR BUS STOP NEAR BRIDGE-FLAT PROFILE

NOT TO SCALE

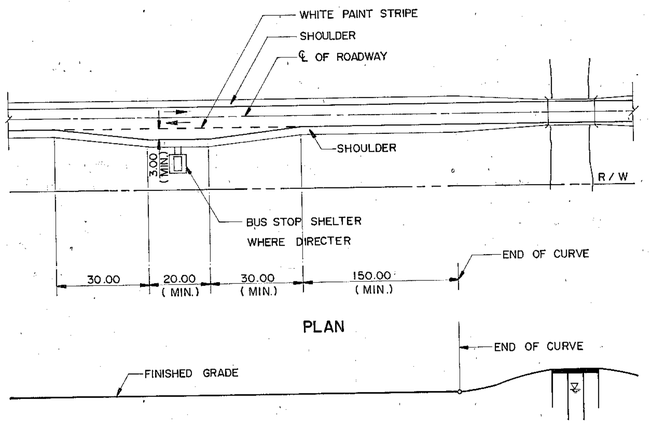


## BUS STOP NEAR BRIDGE-SLOPE ON APPROACH TO BRIDGE

NOT TO SCALE

# KINGDOM OF THAILAND

MINISTRY OF TRANSPORT AND COMMUNICATIONS
DEPARTMENT OF HIGHWAYS

STANDARD DRAWING

BUS STOP LAYOUT

| | | |
|---|---|---|
| DESIGNED : D.O.H. & CONSULTANTS | CHECKED : | DATE JULY 1994 |
| SUBMITTED : (DIRECTOR OF LOCATION & DESIGN DIVISION) | | SCALE NONE |
| APPROVED : (DIRECTOR GENERAL) | | DWG. NO. MD-301 |
| | | SHEET NO. 92 |

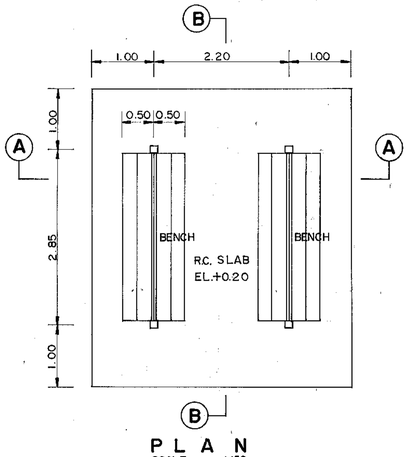


## PLAN
SCALE 1:50

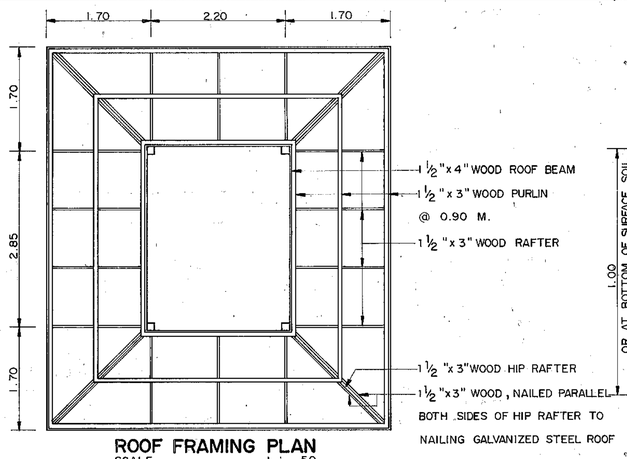


## ROOF FRAMING PLAN
SCALE 1 : 50

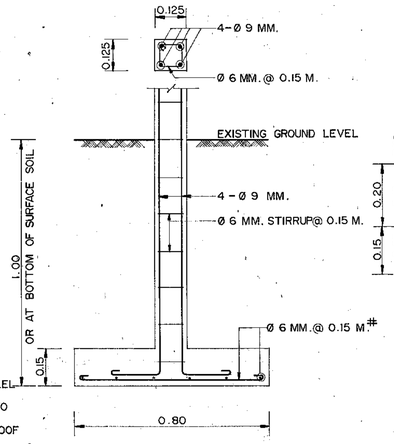


## R.C. COLUMN AND R.C. FOOTING DETAILS
SCALE 1 : 12.5

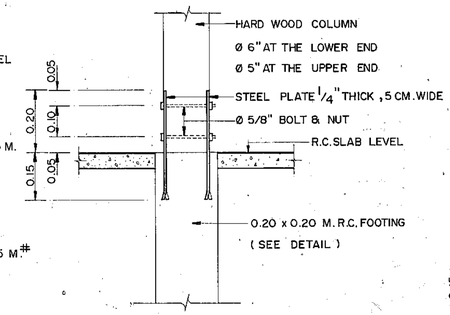


## HARD WOOD COLUMN AND R.C. FOOTING CONNECTION DETAILS
SCALE 1 : 10

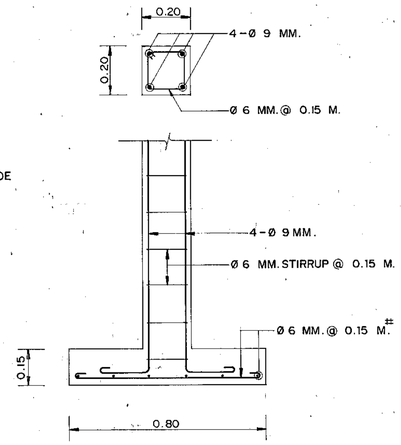


## 0.20 x 0.20 M. R.C. FOOTING DETAILS
SCALE 1 : 12.5

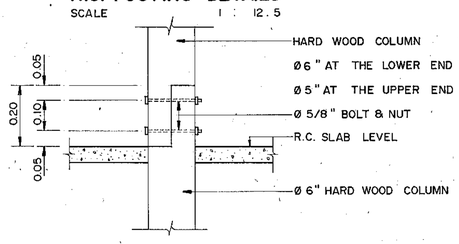


## HARD WOOD COLUMNS CONNECTION DETAILS
SCALE 1 : 10

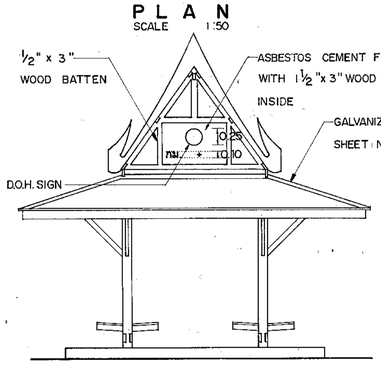


## FRONT ELEVATION
SCALE 1 : 50

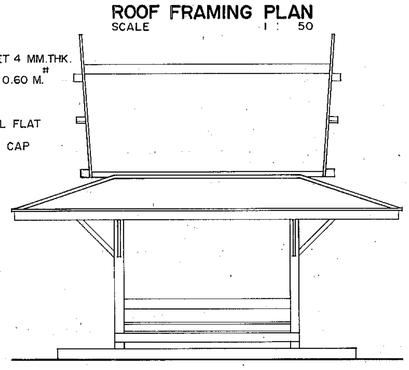

## SIDE ELEVATION
SCALE 1 : 50

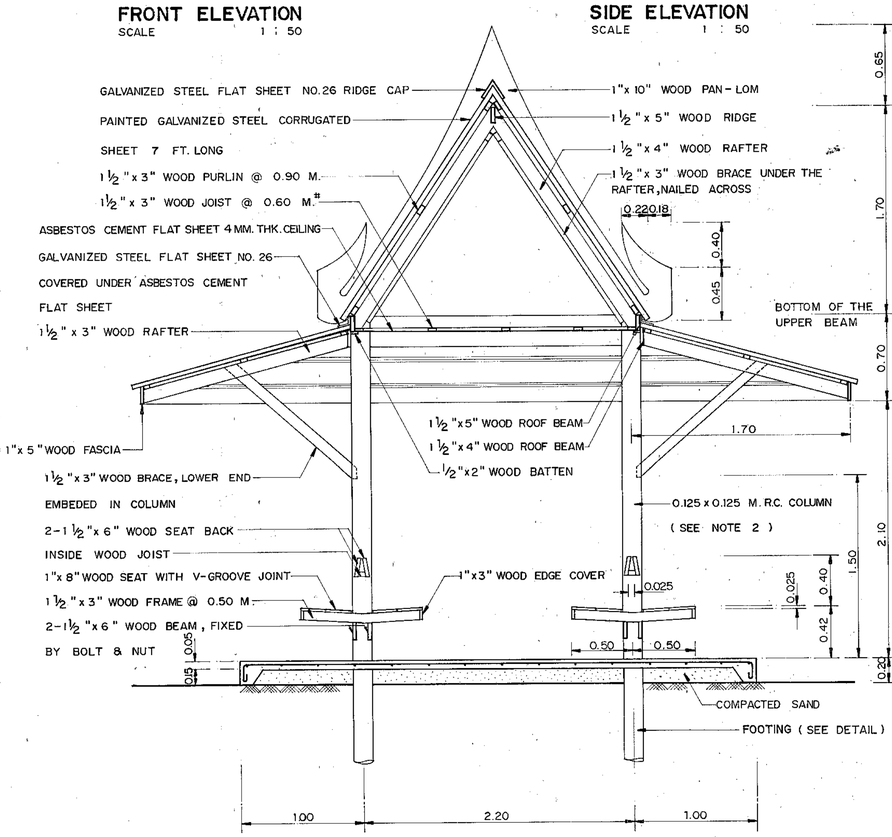


## SECTION (A) - (A)
SCALE 1 : 25

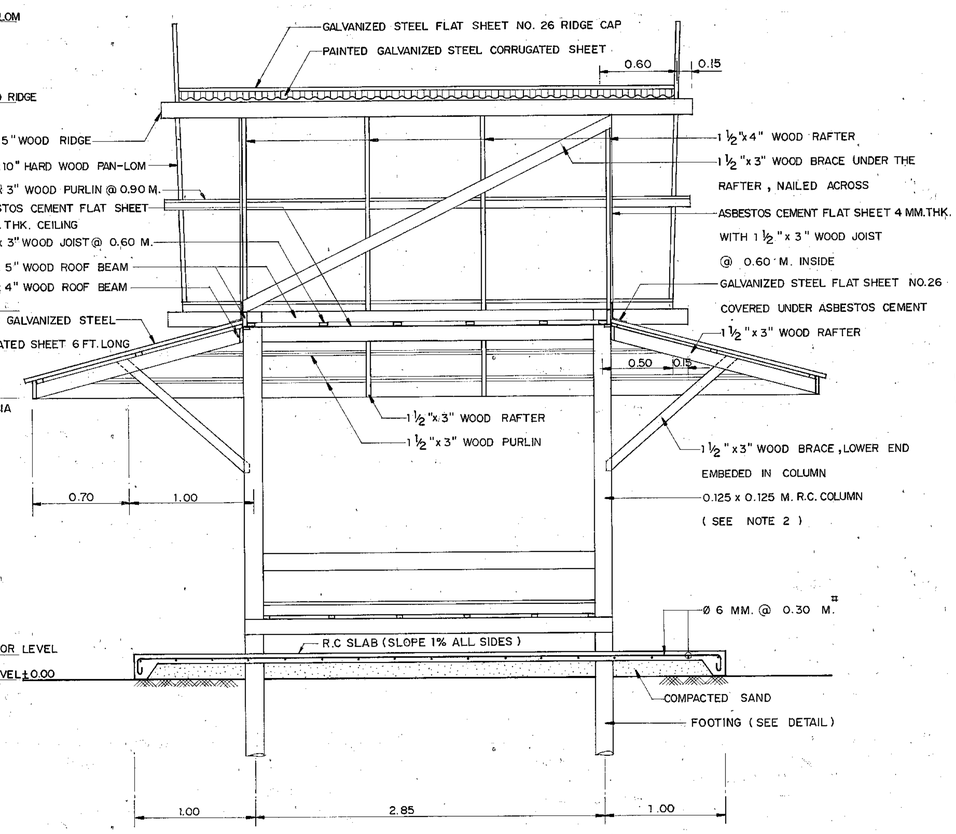


## SECTION (B) - (B)
SCALE 1 : 25

## NOTES :

1. ALL DIMENSIONS ARE IN METERS UNLESS OTHERWISE INDICATED.
2. THE SPECIFIED COLUMNS FOR THIS BUS STOP SHELTER ARE AS FOLLOWS:
   - 2.1 WHERE USING THE 0.125 x 0.125 M. R.C. COLUMN WITH 0.15 x 0.80 x 0.80 M. FOOTING , REACHES TO THE CEILING.
   - 2.2 HARD WOOD COLUMN Ø 6" AT THE LOWER END AND Ø 5" AT THE UPPER END MUST BE NON-DECAYABLE WITH MINIMUM OF 5 METERS DRIVEN IN THE GROUND.
   - 2.3 WHERE USING CONNECTED-COLUMNS SEE DETAILS AS SHOWN IN THIS DRAWING. THE HARD WOOD COLUMNS MUST BE TENG ( *Shorea obtusa* ), RUNG ( *Pentacme siamensis* ), DANG ( *Xylia kerii* ) OR ANY OTHER KIND OF HARD WOOD OF THE SAME QUALITY.
3. ELEVATION ± 0.00 AS SHOWN IN THIS DRAWING; INDICATES THE ROADWAY SHOULDER ELEVATION .
4. CONNECTION JOINTS SHALL BE Ø 3/8" BOLTS AND NUTS WITH WASHERS UNLESS OTHERWISE SHOWN .
5. WOOD TEXTURE MUST BE PRESERVED AGAINST DECAY AND INSECT DAMAGE BY PROPER PRESERVATIVE PAINT.
6. A PATH TO THE SHELTER FROM SHOULDER EDGE SHALL BE PROVIDED BY 1.50 M. WIDE SAND MORTAR AT ELEVATION OF + 0.10 METERS.
7. GALVANIZED STEEL ROOF SHALL BE GREEN OR RED COLOR.
8. PAN - LOM , FASCIA AND CEILING SHALL BE PAINTED IN WHITE COLOR.
9. CONCRETE SHALL HAVE A MINIMUM ULTIMATE COMPRESSIVE STRENGTH OF 210 KSC. FOR 15 x 15 x 15 CM. CUBE AT 28 DAYS. AN APPROXIMATE MIX DESIGN PER CUBIC METER IS SUGGESTED AS FOLLOWS :

| | | |
|---|---|---|
| PORTLAND CEMENT TYPE 1 | 350 | KG. ( MIN. ) |
| SAND | 0.43 | $M^3$ |
| CRUSHED ROCK OR GRAVEL | 0.86 | $M^3$ |
| CONCRETE SLUMP | 10 | CM. ( MAX.) |

10. REINFORCING STEEL SHALL CONFORM TO TIS. 20 GRADE SR 24.
11. IN CASE OF CONSTRUCTION BY THE DEPARTMENT OF HIGHWAYS AND NOT LOCATED IN MAIN ROUTE , LOCAL MATERIALS MAY BE USED BY REMAINING SHAPE AND STRUCTURES OF THIS BUS STOP SHELTER.

# KINGDOM OF THAILAND
## MINISTRY OF TRANSPORT AND COMMUNICATIONS
## DEPARTMENT OF HIGHWAYS

STANDARD DRAWING

## BUS STOP SHELTER TYPE A

| | | |
|---|---|---|
| DESIGNED : D.O.H. & CONSULTANTS | CHECKED : | DATE JULY 1994 |
| SUBMITTED : (DIRECTOR OF LOCATION & DESIGN DIVISION) | | SCALE AS SHOWN |
| APPROVED : (DIRECTOR GENERAL) | | DWG. NO. MD-302 |
| | | SHEET NO. 93 |

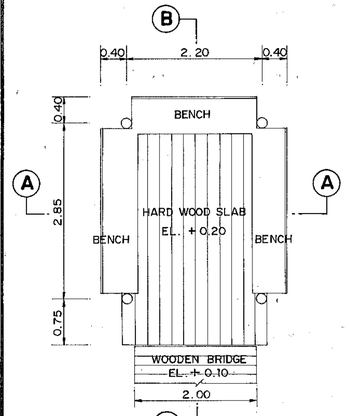


## PLAN
SCALE 1:50

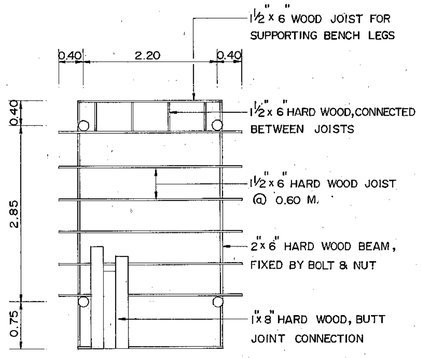


## FLOOR, JOIST AND BEAM PLAN
SCALE 1:50

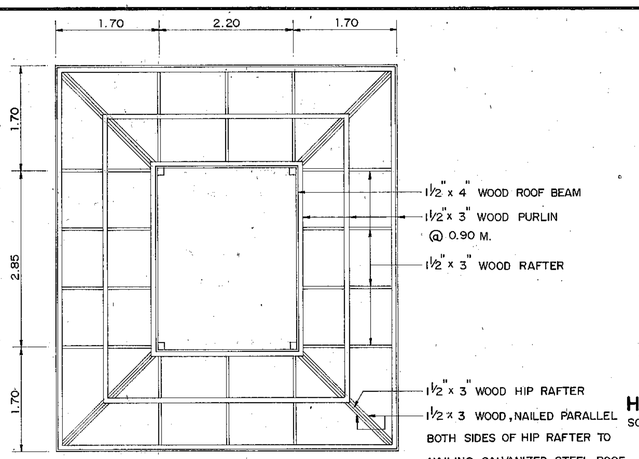


## ROOF FRAMING PLAN
SCALE 1:50

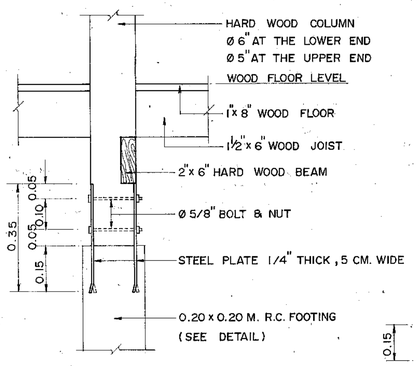


## HARD WOOD COLUMN AND R.C. FOOTING
SCALE 1:10

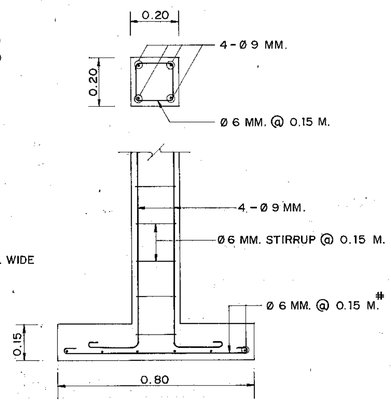


## 0.20 x 0.20 M. R.C. FOOTING DETAILS
SCALE 1:12.5

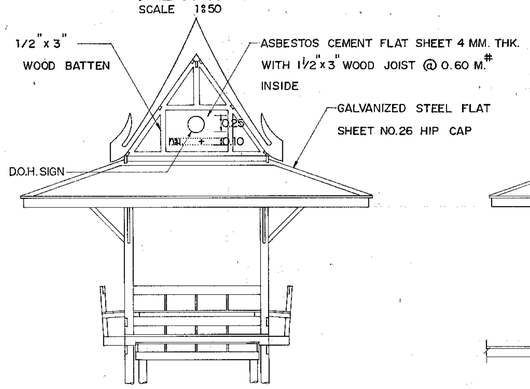


## FRONT ELEVATION
SCALE 1:50

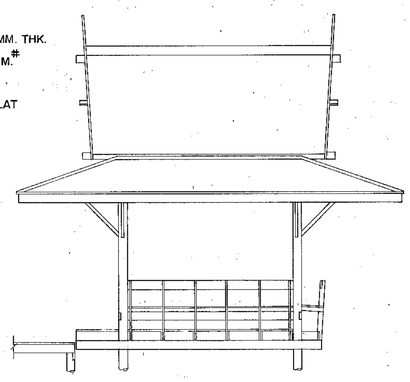

## SIDE ELEVATION
SCALE 1:50

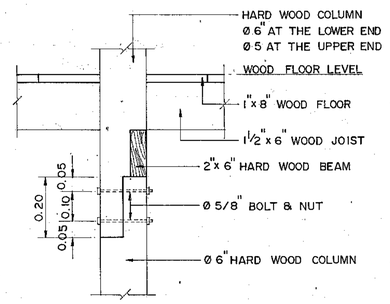


## HARD WOOD COLUMNS CONNECTION DETAILS
SCALE 1:10

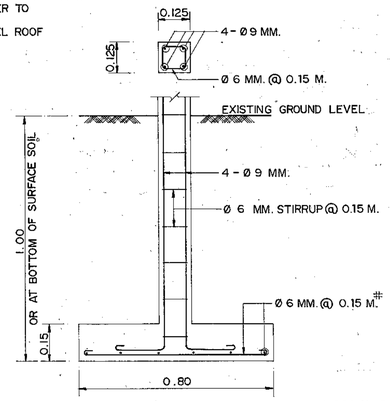


## R.C. COLUMN AND R.C. FOOTING DETAILS
SCALE 1:12.5

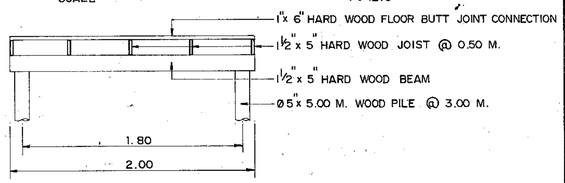


## WOODEN BRIDGE DETAILS
SCALE 1:25

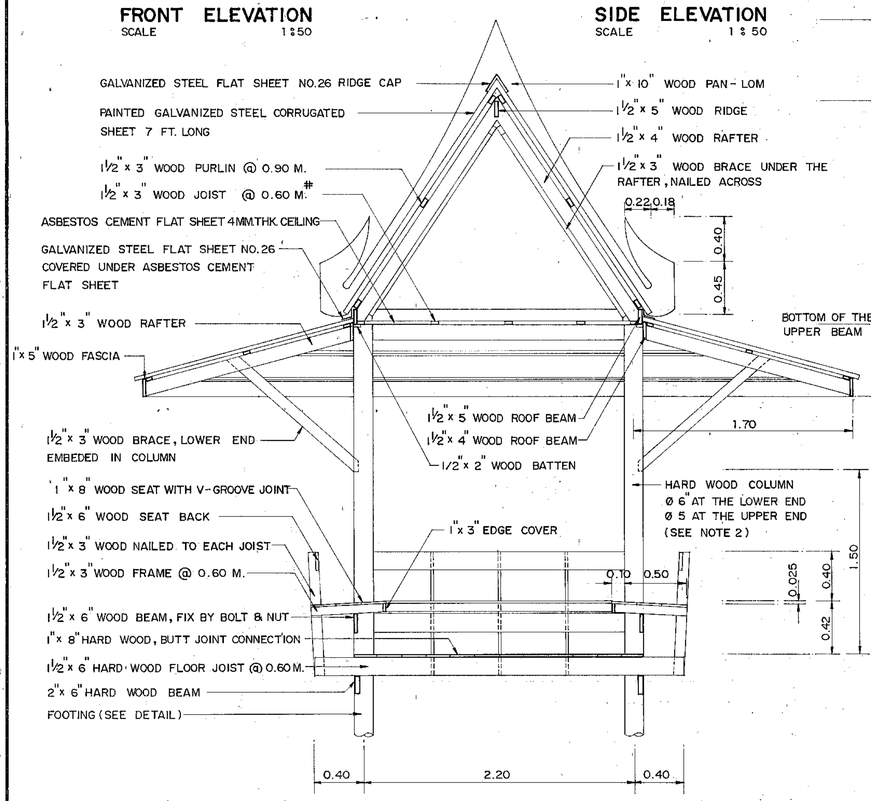


## SECTION (A) - (A)
SCALE 1:25

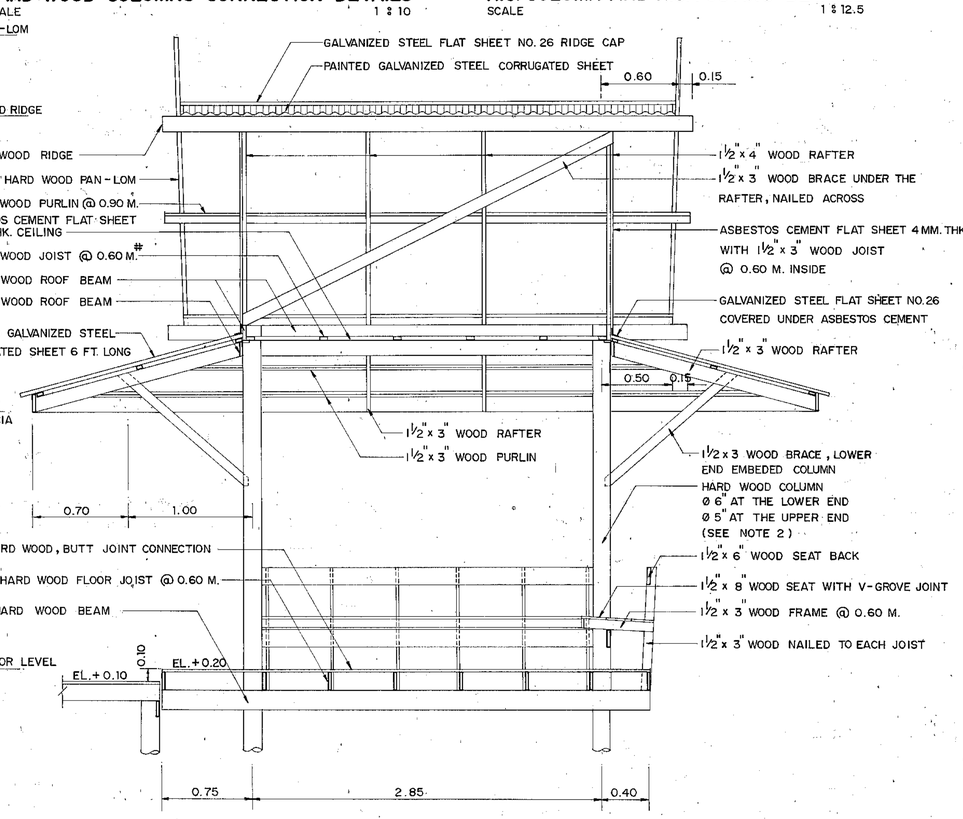


## SECTION (B) - (B)
SCALE 1:25

## NOTES :

1. ALL DIMENSIONS ARE IN METERS UNLESS OTHERWISE INDICATED.
2. THE SPECIFIED COLUMNS FOR THIS BUS STOP SHELTER ARE AS FOLLOWS:
   - 2.1 WHERE USING THE 0.125 x 0.125 M. R.C. COLUMN WITH 0.15 x 0.80 x 0.80 M. FOOTING, REACHES TO THE CEILING.
   - 2.2 HARD WOOD COLUMN Ø 6" AT THE LOWER END AND Ø 5" AT THE UPPER END MUST BE NON - DECAYABLE WITH MINIMUM OF 5 METERS DRIVEN IN THE GROUND.
   - 2.3 WHERE USING CONNECTED - COLUMNS SEE DETAILS AS SHOWN IN THIS DRAWING. THE HARD WOOD COLUMNS MUST BE TENG (Shorea obtusa), RUNG (Pentacme siamensis), DANG (Xylia kerii) OR ANY OTHER KIND OF HARD WOOD OF THE SAME QUALITY.
3. ELEVATION ± 0.00 AS SHOWN IN THIS DRAWING, INDICATES THE ROADWAY SHOULDER ELEVATION.
4. CONNECTION JOINTS SHALL BE Ø 3/8 BOLTS AND NUTS WITH WASHERS UNLESS OTHERWISE SHOWN.
5. WOOD TEXTURE MUST BE PRESERVED AGAINST DECAY AND INSECT DAMAGE BY PROPER PRESERVATIVE PAINT.
6. A PATH TO THE SHELTER FROM SHOULDER EDGE SHALL BE PROVIDED BY 2.00 M. WIDE WOODEN BRIDGE AT ELEVATION OF + 0.10 METERS.
7. GALVANIZED STEEL ROOF SHALL BE GREEN OR RED COLOR.
8. PAN - LOM, FASCIA AND CEILING SHALL BE PAINTED IN WHITE COLOR.
9. CONCRETE SHALL HAVE A MINIMUM ULTIMATE COMPRESSIVE STRENGTH OF 210 KSC. FOR 15 x 15 x 15 CM. CUBE AT 28 DAYS. AN APPROXIMATE MIX DESIGN PER CUBIC METER IS SUGGESTED AS FOLLOWS.

| | | |
|---|---|---|
| PORTLAND CEMENT TYPE 1 | 350 | KG. (MIN.) |
| SAND | 0.43 | $M^3$ |
| CRUSHED ROCK OR GRAVEL | 0.86 | $M^3$ |
| CONCRETE SLUMP | 10 | CM. (MAX.) |

10. REINFORCING STEEL SHALL CONFORM TO TIS. 20 GRADE SR.24.
11. IN CASE OF CONSTRUCTION BY THE DEPARTMENT OF HIGHWAYS AND NOT LOCATED IN MAIN ROUTE, LOCAL MATERIALS MAY BE USED BY REMAINING SHAPE AND STRUCTURES OF THIS BUS STOP SHELTER.

# KINGDOM OF THAILAND
## MINISTRY OF TRANSPORT AND COMMUNICATIONS
## DEPARTMENT OF HIGHWAYS

STANDARD DRAWING

BUS STOP SHELTER TYPE B

| | | |
|---|---|---|
| DESIGNED: D.O.H. & CONSULTANTS | CHECKED: | DATE JULY 1994 |
| SUBMITTED: (DIRECTOR OF LOCATION & DESIGN DIVISION) | | SCALE AS SHOWN |
| | | DWG. NO. MD-303 |
| APPROVED: (DIRECTOR GENERAL) | | SHEET NO. 94 |

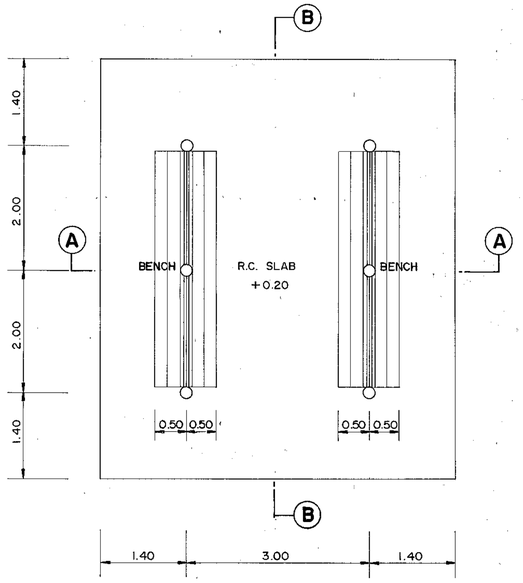


## PLAN
SCALE 1 : 50

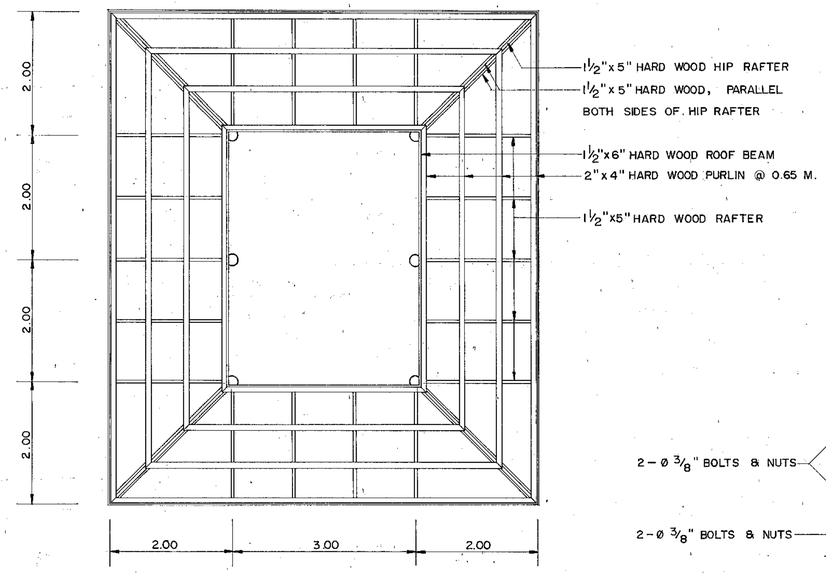


## ROOF FRAMING PLAN
SCALE 1 : 50

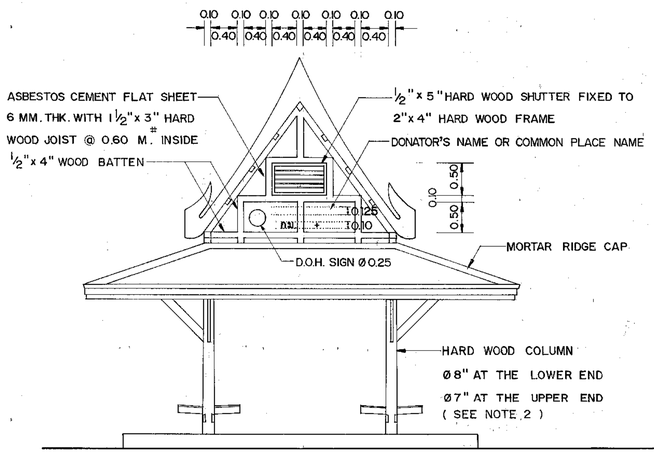


## FRONT ELEVATION
SCALE 1 : 50

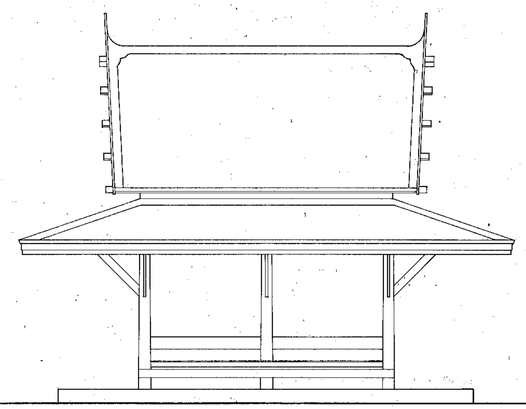

## SIDE ELEVATION
SCALE 1 : 50

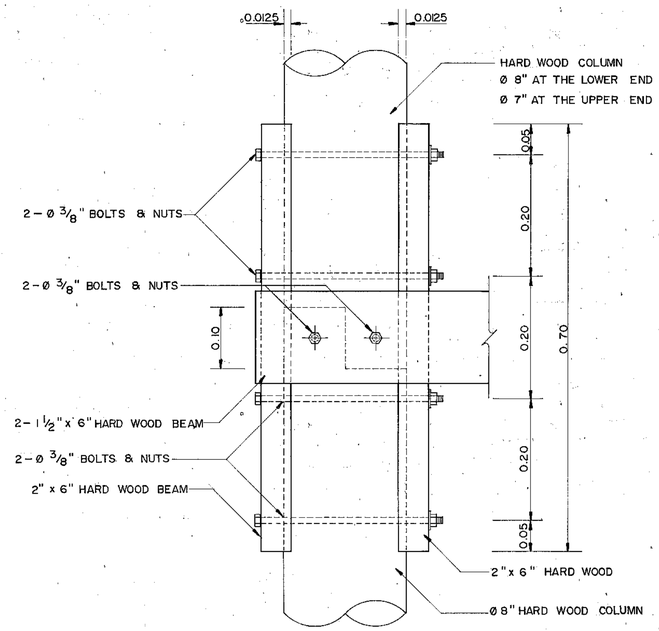


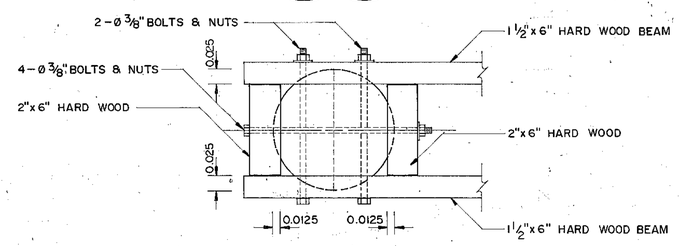


## HARD WOOD COLUMN CONNECTION DETAILS
SCALE 1 : 5

## NOTES :

1. ALL DIMENSIONS ARE IN METERS UNLESS OTHERWISE INDICATED.
2. THE SPECIFIED COLUMNS FOR THIS BUS STOP SHELTER ARE AS FOLLOWS :
   - 2.1 WHERE USING THE Ø 20 CM. ( INSIDE DIAMETER OF ASBESTOS CEMENT PIPE FORM ) R.C. COLUMN WITH 0.15 x 1.00 x 1.00 M. FOOTING, REACHES TO THE CEILING.
   - 2.2 HARD WOOD COLUMN Ø 8" AT THE LOWER END AND Ø 7" AT THE UPPER END MUST BE NON – DECAYABLE WITH MINIMUM OF 3.50 METERS DRIVEN IN THE GROUND OR ALLOWABLE LOAD NOT LESS THAN 1.5 TONS.
   - 2.3 WHERE USING CONNECTED – COLUMNS SEE DETAILS AS SHOWN IN THIS DRAWING. THE HARD WOOD COLUMNS MUST BE TENG (Shorea obtusa), RUNG (Pentacme siamensis), DANG (Xylia kerii) OR ANY OTHER KIND OF HARD WOOD OF THE SAME QUALITY.
3. ELEVATION ± 0.00 AS SHOWN IN THIS DRAWING, INDICATES THE ROADWAY SHOULDER ELEVATION.
4. ALL WOODEN STRUCTURES SHALL BE HARD WOOD.
5. WOOD TEXTURE MUST BE PRESERVED AGAINST DECAY AND INSECT DAMAGE BY PROPER PRESERVATIVE PAINT.
6. A PATH TO THE SHELTER FROM SHOULDER EDGE SHALL BE PROVIDED BY 1.50 M. WIDE SAND MOTAR AT ELEVATION OF + 0.10 METERS.
7. CONCRETE SHALL HAVE A MINIMUM ULTIMATE COMPRESSIVE STRENGTH OF 210 KSC. FOR 15 x 15 x 15 CM. CUBE AT 28 DAYS. AN APPROXIMATE MIX DESIGN PER CUBIC METER IS SUGGESTED AS FOLLOWS.

| | | |
|---|---|---|
| PORTLAND CEMENT TYPE 1 | 350 | KG. (MIN.) |
| SAND | 0.43 | $M^3$ |
| CRUSHED ROCK OR GRAVEL | 0.86 | $M^3$ |
| CONCRETE SLUMP | 10 | CM. ( MAX. ) |

8. REINFORCING STEEL SHALL CONFORM TO TIS. 20 GRADE SR. 24
9. THIS DRAWING SHALL BE USED IN COMBINATION WITH DWG. NO. MD-305.

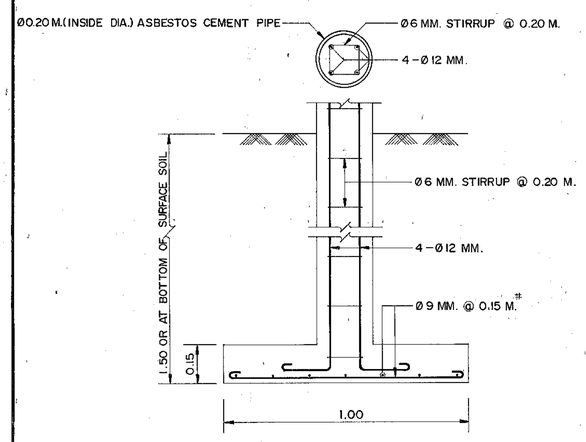


## R.C. COLUMN AND R.C. FOOTING DETAILS
SCALE 1 : 12.5

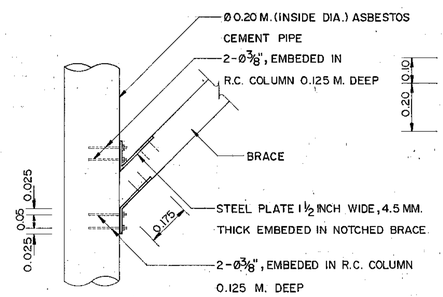


## DETAIL OF BRACE CONNECTION WITH R.C. COLUMN
SCALE 1 : 12.5

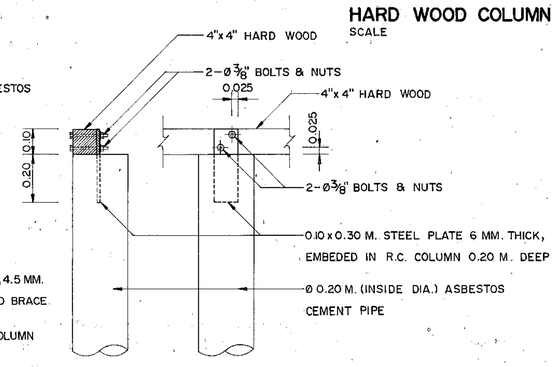


## DETAIL OF 4"x 4" HARD WOOD CONNECTION AT TOP OF R.C. COLUMN
SCALE 1 : 12.5

# KINGDOM OF THAILAND
MINISTRY OF TRANSPORT AND COMMUNICATIONS
DEPARTMENT OF HIGHWAYS

STANDARD DRAWING

BUS STOP SHELTER TYPE C – I

| | | |
|---|---|---|
| DESIGNED : D.O.H. & CONSULTANTS | CHECKED : | DATE JULY 1994 |
| SUBMITTED : (DIRECTOR OF LOCATION & DESIGN DIVISION) | | SCALE AS SHOWN |
| APPROVED : (DIRECTOR GENERAL) | | DWG. NO. MD-304 |
| | | SHEET NO. 95 |

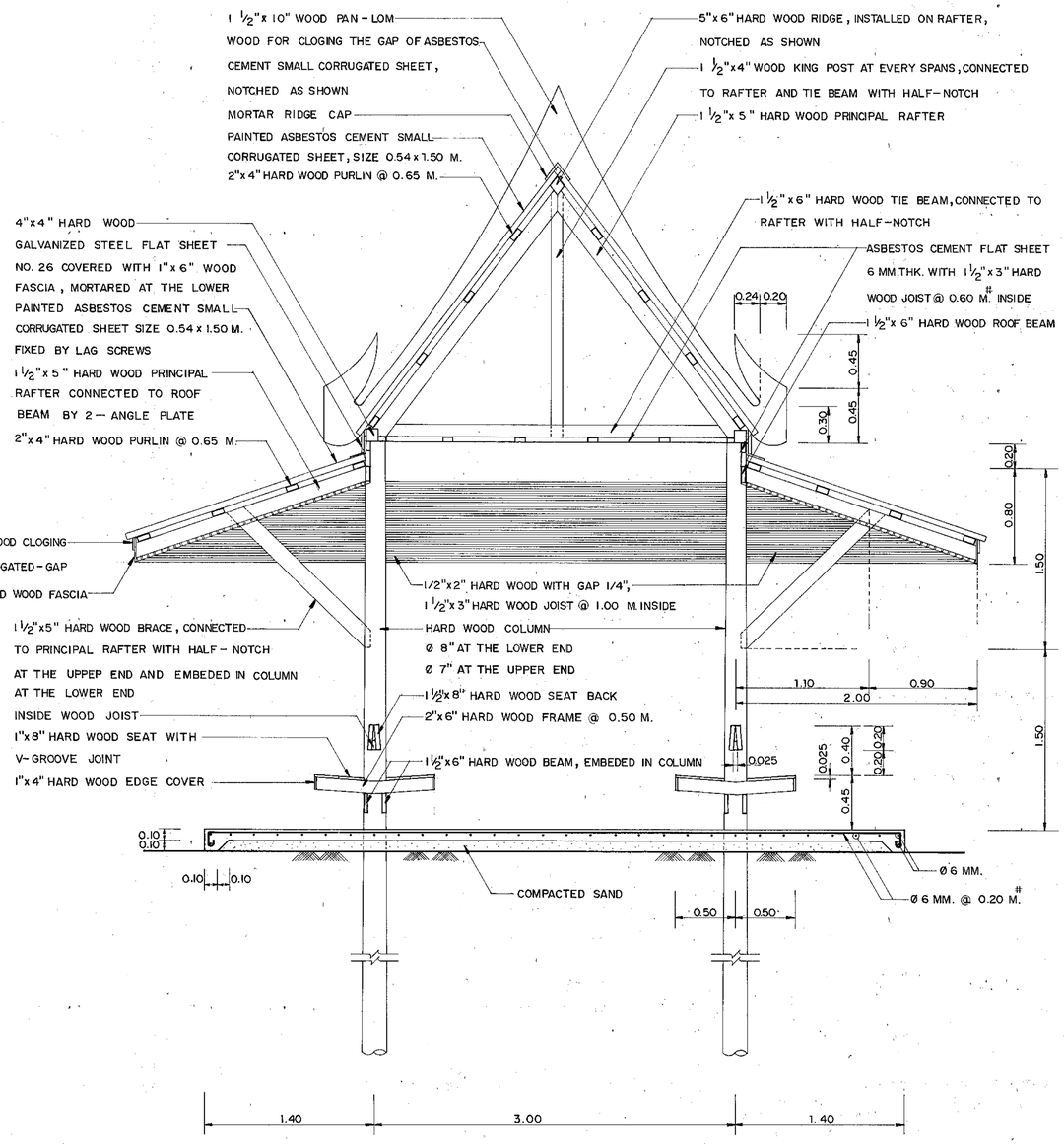


SECTION (A) – (A)
SCALE 1 : 25

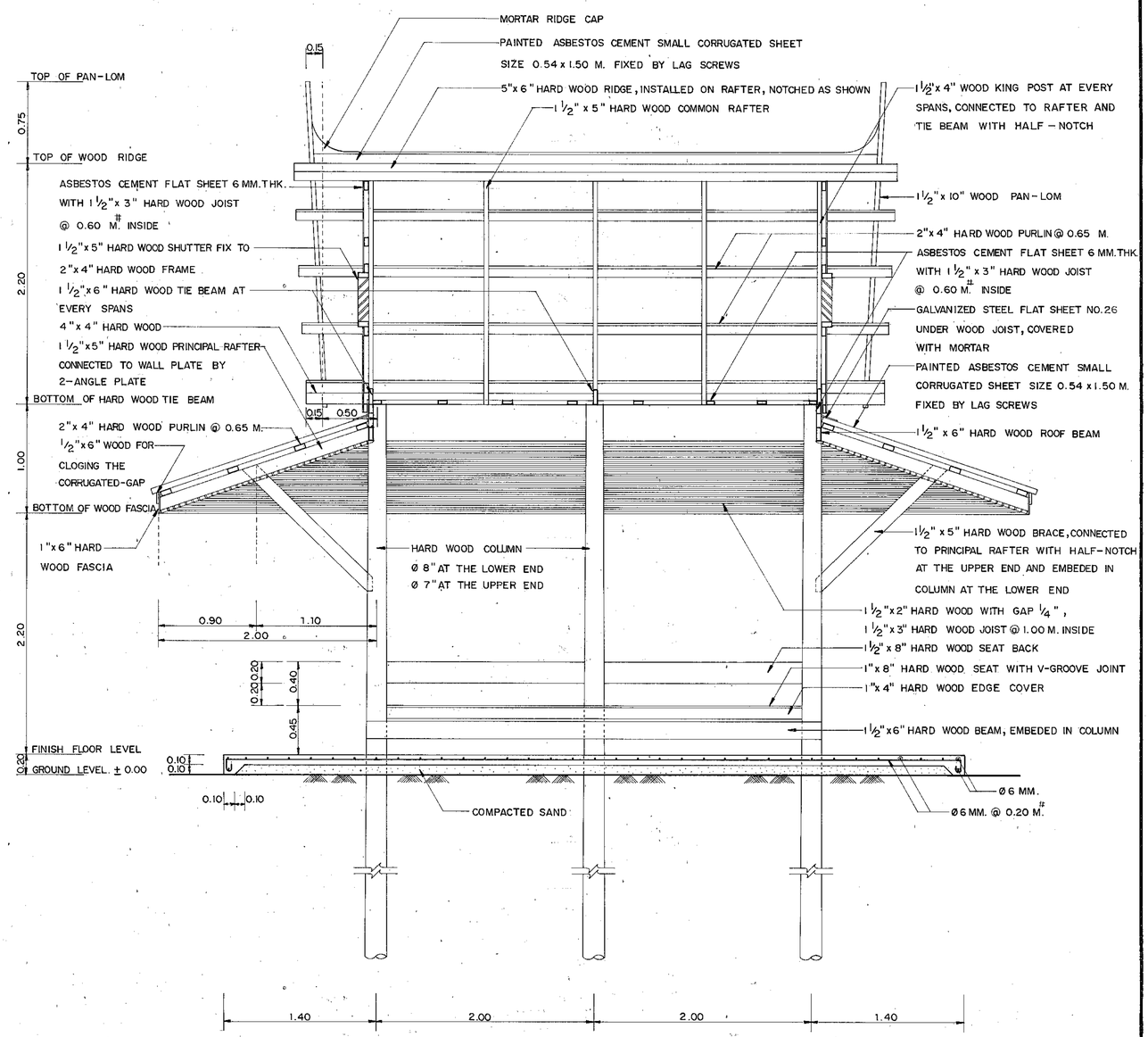


SECTION (B) – (B)
SCALE 1 : 25

## NOTES :

1. ALL DIMENSIONS ARE IN METER UNLESS OTHWISE INDICATED.
2. THIS DRAWING SHALL BE USED IN COMBINATION WITH DWG. NO. MD-304.

# KINGDOM OF THAILAND
## MINISTRY OF TRANSPORT AND COMMUNICATIONS
## DEPARTMENT OF HIGHWAYS

STANDARD DRAWING

BUS STOP SHELTER TYPE C-II

| | | |
|---|---|---|
| DESIGNED : D.O.H. & CONSULTANTS | CHECKED : | DATE JULY 1994 |
| SUBMITTED : (DIRECTOR OF LOCATION & DESIGN DIVISION) | | SCALE 1 : 25 |
| | | DWG. NO. MD-305 |
| APPROVED : (DIRECTOR GENERAL) | | SHEET NO. 96 |

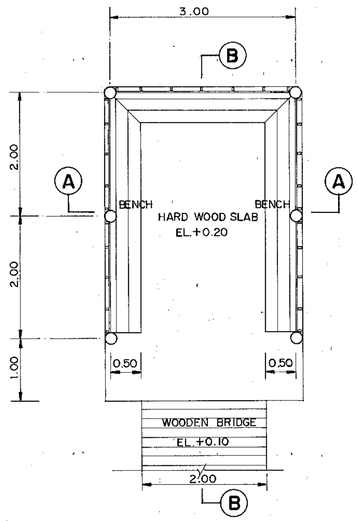


## PLAN
SCALE 1 : 50

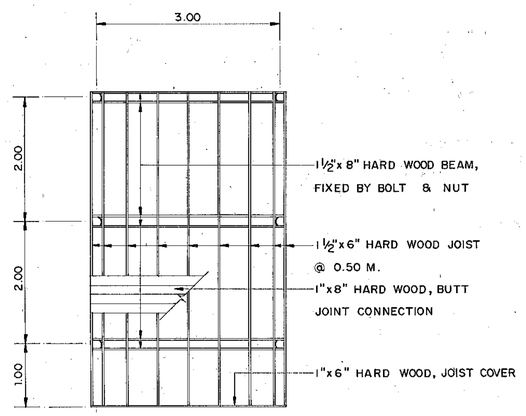


## FLOOR, JOIST AND BEAM PLAN
SCALE 1 : 50

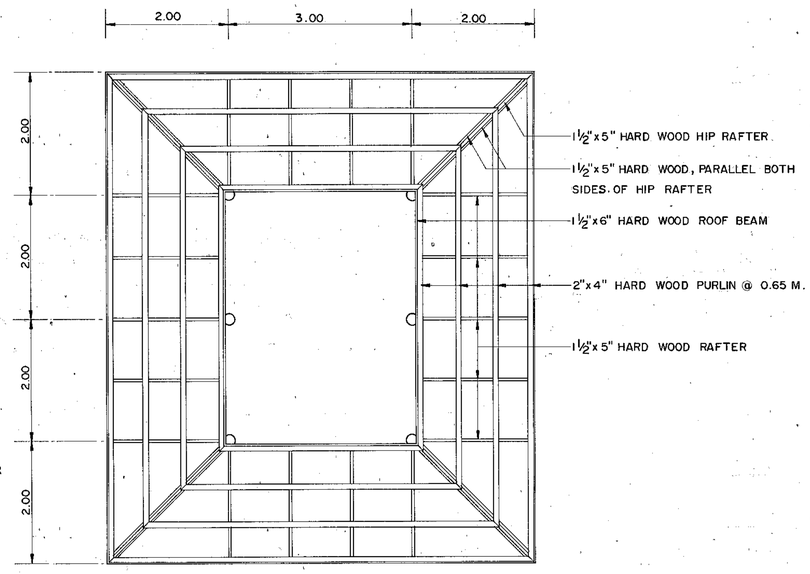


## ROOF FRAMING PLAN
SCALE 1 : 50

## NOTES :

1. ALL DIMENSIONS ARE IN METERS UNLESS OTHERWISE INDICATED.
2. THE SPECIFIED COLUMNS FOR THIS BUS STOP SHELTER ARE AS FOLLOWS :
   - 2.1 WHERE USING THE Ø 20 CM. ( INSIDE DIAMETER OF ASBESTOS CEMENT PIPE FORM ) R.C. COLUMN WITH 0.15 x 1.00 x 1.00 M. FOOTING , REACHES TO THE CEILING.
   - 2.2 HARD WOOD COLUMN Ø 8" AT THE LOWER END AND Ø7" AT THE UPPER END MUST BE NON-DECAYABLE WITH MINIMUM OF 3.50 METERS DRIVEN IN THE GROUND OR ALLOWABLE LOAD NOT LESS THAN 1.5 TONS.
   - 2.3 WHERE USING CONNECTED - COLUMNS SEE DETAILS AS SHOWN IN THIS DRAWING. THE HARD WOOD COLUMNS MUST BE TENG (Shorea obtusa), RUNG ( Pentacme siamensis ), DANG ( Xylia kerii ) OR ANY OTHERE KIND OF HARD WOOD OF THE SAME QUALITY.
3. ELEVATION ± 0.00 AS SHOWN IN THIS DRAWING , INDICATES THE ROADWAY SHOULDER ELEVATION.
4. ALL WOODEN STRUCTURES SHALL BE HARD WOOD.
5. WOOD TEXTURE MUST BE PRESERVED AGAINST DECAY AND INSECT DAMAGE BY PROPER PRESERVATIVE PAINT.
6. A PATH TO THE SHELTER FROM SHOULDER EDGE SHALL BE PROVIDED BY 2.00 M. WIDE WOODEN BRIDGE AT ELEVATION OF + 0.10 METERS.
7. CONCRETE SHALL HAVE A MINIMUM ULTIMATE COMPRESSIVE STRENGTH OF 210 KSC. FOR 15 x 15 x 15 CM. CUBE AT 28 DAYS. AN APPROXIMATE MIX DESIGN PER CUBIC METER IS SUGGESTED AS FOLLOWS :

| | | |
|---|---|---|
| PORTLAND CEMENT TYPE 1 | 350 | KG. ( MIN. ) |
| SAND | 0.43 | $M^3$ |
| CRUSHED ROCK OR GRAVEL | 0.86 | $M^3$ |
| CONCRETE SLUMP | 10 | CM. ( MAX. ) |

8. REINFORCING STEEL SHALL CONFORM TO TIS.20 GRADE SR.24.
9. THIS DRAWING SHALL BE USED IN COMBINATION WITH DWG. NO. MD-307.

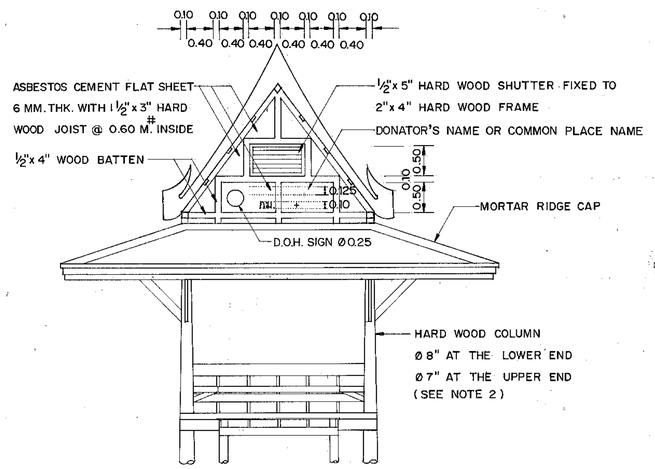


## FRONT ELEVATION
SCALE 1 : 50

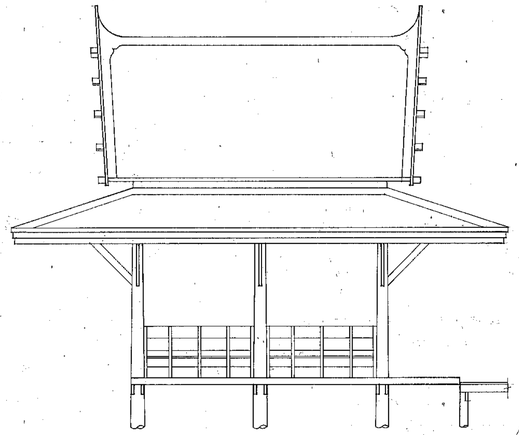

## SIDE ELEVATION
SCALE 1 : 50

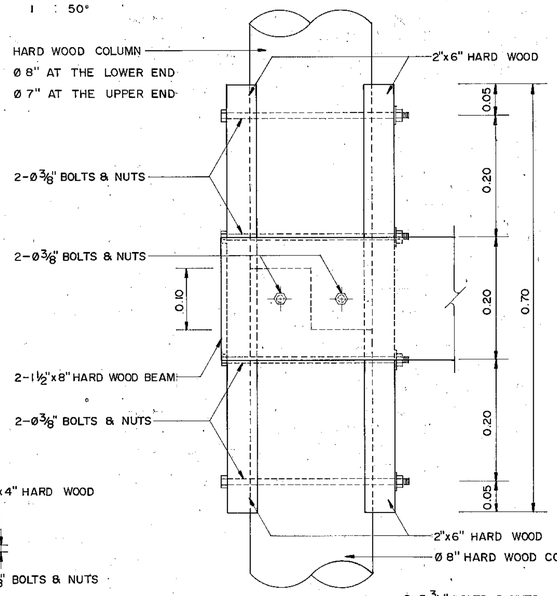


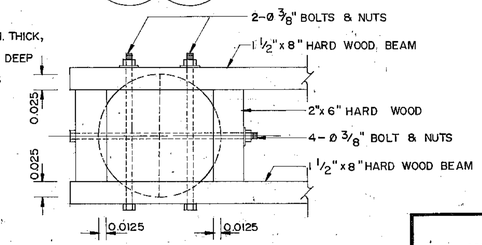


## HARD WOOD COLUMN CONNECTION DETAILS
SCALE 1 : 5

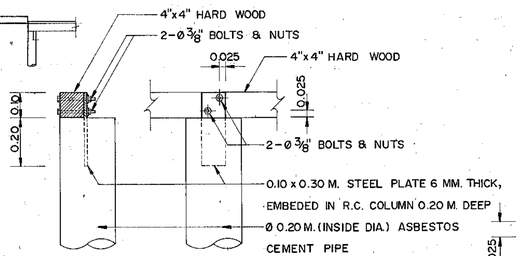


## DETAIL OF 4"x 4" HARD WOOD CONNECTION AT TOP OF R.C. COLUMN
SCALE 12.5

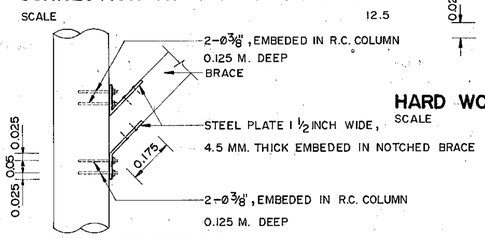


## DETAIL OF BRACE CONNECTION WITH R.C. COLUMN
SCALE 1 : 12.5

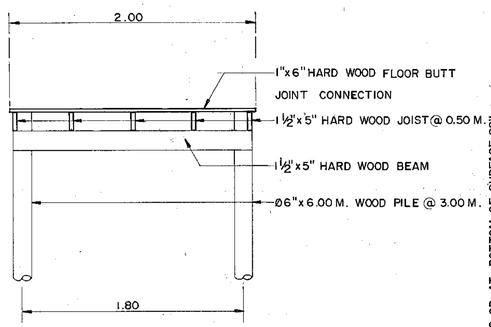


## WOODEN BRIDGE DETAILS
SCALE 1 : 25

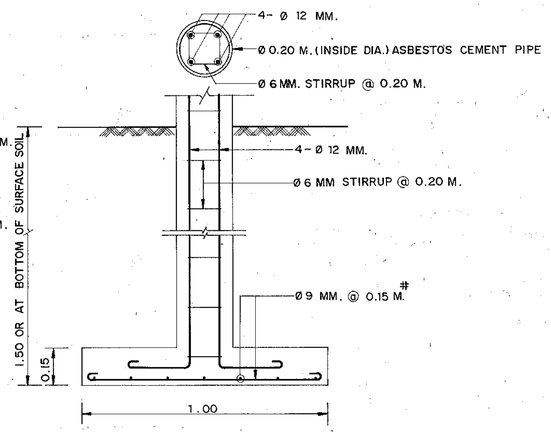


## R.C. COLUMN AND R.C. FOOTING DETAILS
SCALE 1 : 12.5

# KINGDOM OF THAILAND
## MINISTRY OF TRANSPORT AND COMMUNICATIONS
## DEPARTMENT OF HIGHWAYS

STANDARD DRAWING

BUS STOP SHELTER TYPE D - I

| | | |
|---|---|---|
| DESIGNED : D.O.H. & CONSULTANTS | CHECKED : | DATE JULY 1994 |
| SUBMITTED : (DIRECTOR OF LOCATION & DESIGN DIVISION) | | SCALE AS SHOWN |
| | | DWG. NO. MD-306 |
| APPROVED : (DIRECTOR GENERAL) | | SHEET NO. 97 |

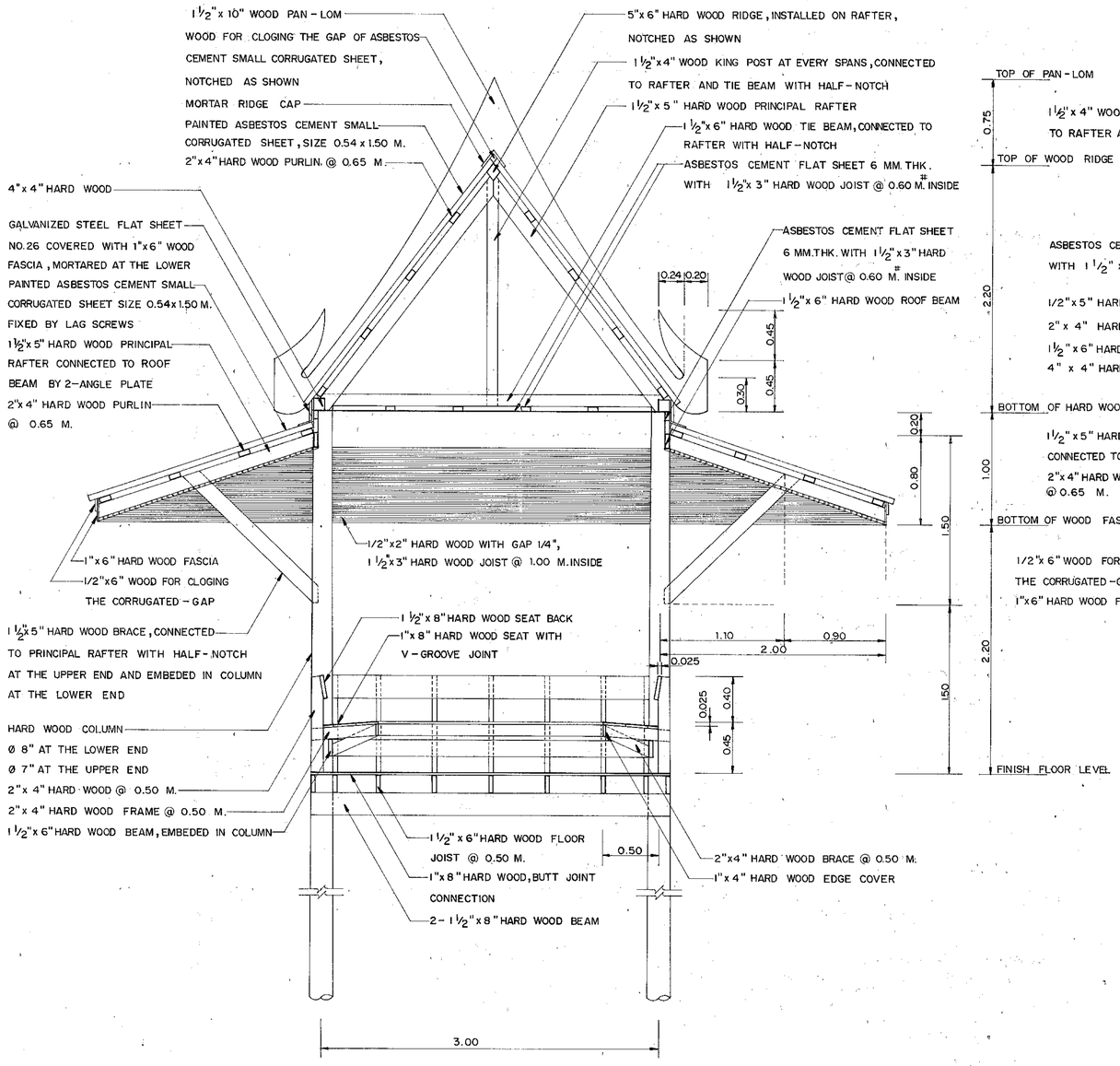


## SECTION (A) - (A)

SCALE 1 : 25

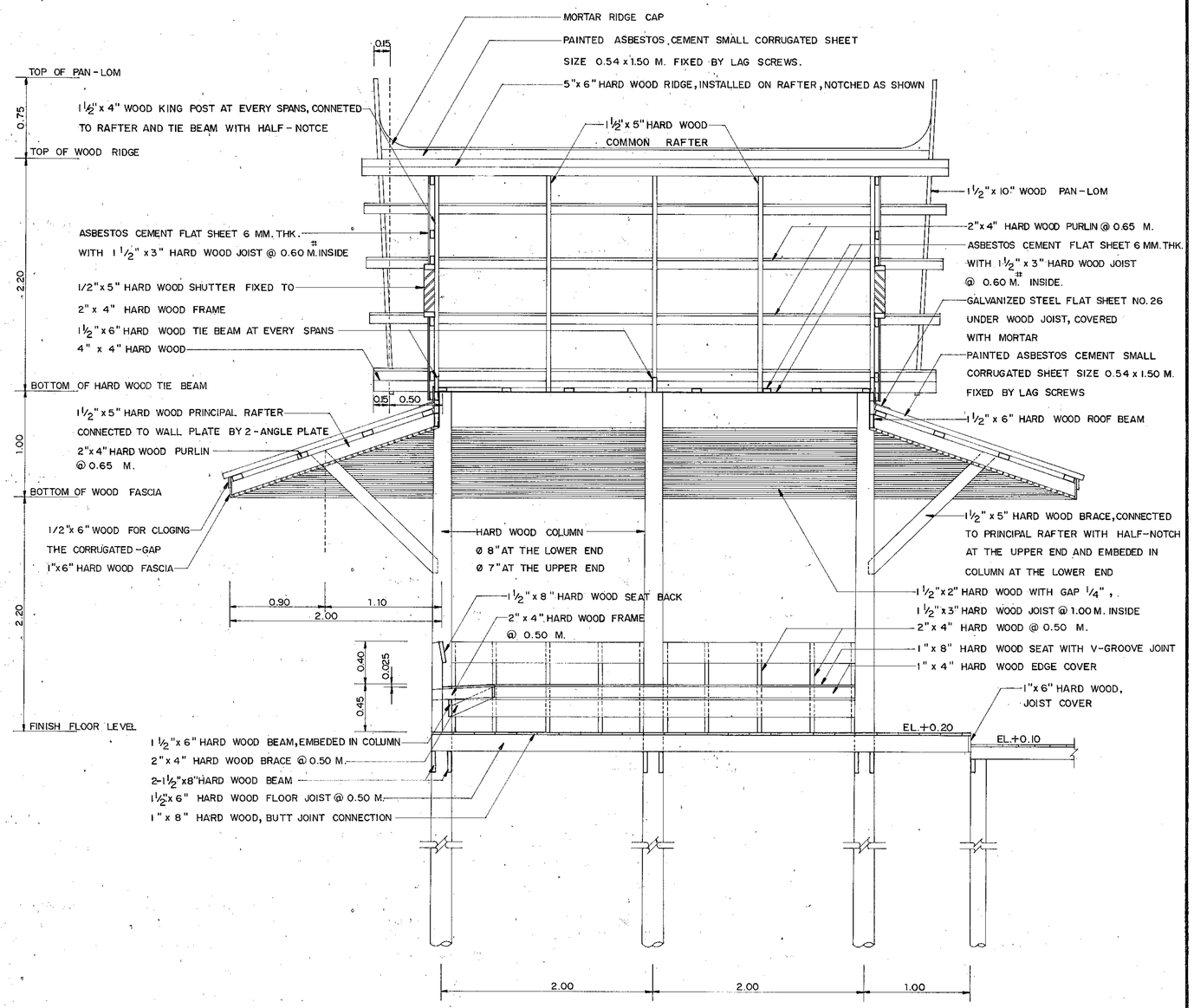


## SECTION (B) - (B)

SCALE 1 : 25

## NOTES :

1 . ALL DIMENSIONS ARE IN METER UNLESS OTHWISE INDICATED .

2 . THIS DRAWING SHALL BE USED IN COMBINATION WITH DWG. NO. MD-306.

# KINGDOM OF THAILAND
## MINISTRY OF TRANSPORT AND COMMUNICATIONS
## DEPARTMENT OF HIGHWAYS

STANDARD DRAWING

BUS STOP SHELTER TYPE D - II

| | | |
|---|---|---|
| DESIGNED : D.O.H. & CONSULTANTS | CHECKED : | DATE JULY 1994 |
| SUBMITTED : (DIRECTOR OF LOCATION & DESIGN DIVISION) | | SCALE 1 : 25 |
| | | DWG. NO. MD-307 |
| APPROVED : (DIRECTOR GENERAL) | | SHEET NO. 98 |

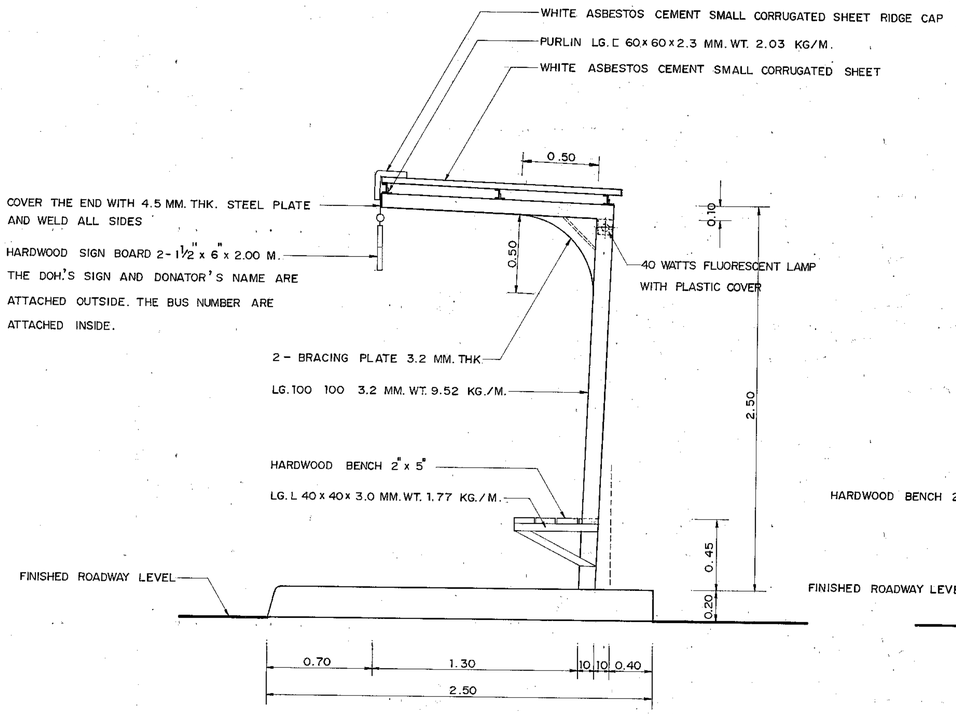


## SIDE ELEVATION

SCALE 1 : 20

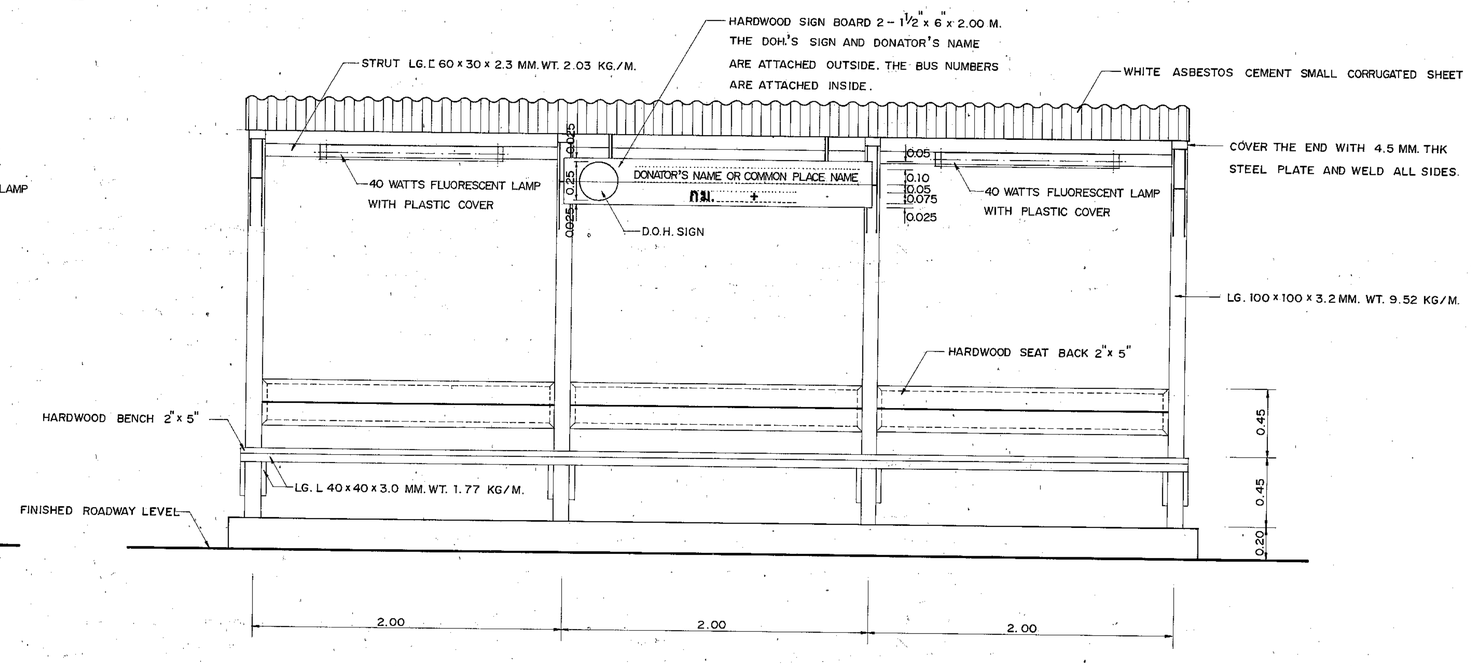


## FRONT ELEVATION

SCALE 1 : 20

## NOTES :

1. ALL DIMENSIONS ARE IN METERS UNLESS OTHERWISE INDICATED.
2. CONCRETE SHALL HAVE A MINIMUM ULTIMATE COMPRESSIVE STRENGTH OF 210 KSC. FOR 15 x 15 x 15 CM. CUBE AT 28 DAYS. AN APPROXIMATE MIX DESIGN PER CUBIC METER IS SUGGESTED AS FOLLOWS :

| | | |
|---|---|---|
| PORTLAND CEMENT TYPE 1 | 350 | KG. (MIN.) |
| SAND | 0.43 | $M^3$ |
| CRUSHED ROCK OR GRAVEL | 0.86 | $M^3$ |
| CONCRETE SLUMP | 10 | CM. (MAX.) |

3. CLEAR CONCRETE COVER SHALL BE 2.5 CM.
4. REINFORCING STEEL SHALL CONFORM TO TIS. 20 GRADE SR 24 FOR ROUND BARS AND TIS. 24 GRADE SD 30 FOR DEFORMED BARS.
5. WOODEN STRUCTURES SHALL BE HARDWOOD.
6. ALL WELDING SHALL BE 3/16" FILLET WELD AS AISC. SPECIFICATIONS.
7. STEEL STRUCTURES SHALL BE PAINTED WITH RUST - OLEUM OR OTHER EQUIVALENT IN DUSKY BLACK COLOR.
8. WOODEN PARTS SHALL BE POLISHED, NOT PAINTED.
9. ONE 40 WATTS FLUORESCENT SHALL BE USED FOR OUTER SPAN.
10. THIS DRAWING SHALL BE USED IN COMBINATION WITH DWG. NO. MD - 309.

# KINGDOM OF THAILAND
## MINISTRY OF TRANSPORT AND COMMUNICATIONS
## DEPARTMENT OF HIGHWAYS

STANDARD DRAWING

BUS STOP SHELTER TYPE E - I

| | | |
|---|---|---|
| DESIGNED : D.O.H. & CONSULTANTS | CHECKED : | DATE JULY 1994 |
| SUBMITTED : (DIRECTOR OF LOCATION & DESIGN DIVISION) | | SCALE 1 : 20 |
| | | DWG. NO. MD-308 |
| APPROVED : (DIRECTOR GENERAL) | | SHEET NO. 99 |

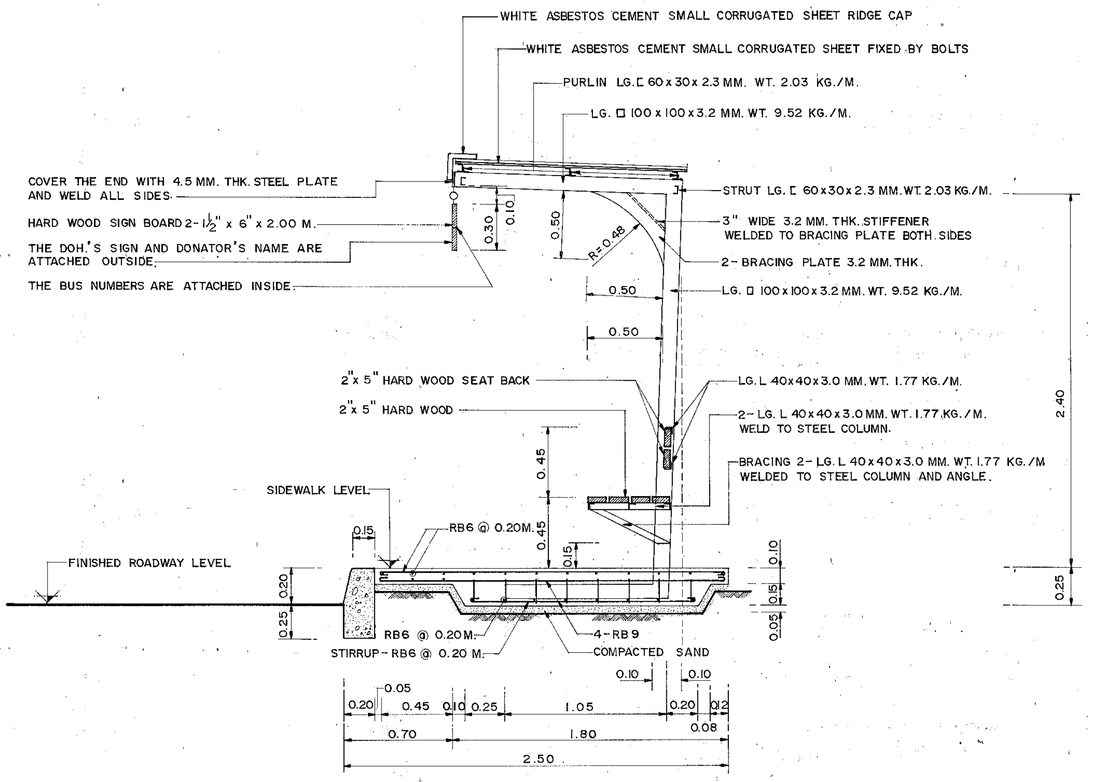


**SECTION (A)-(A)**
SCALE 1:20

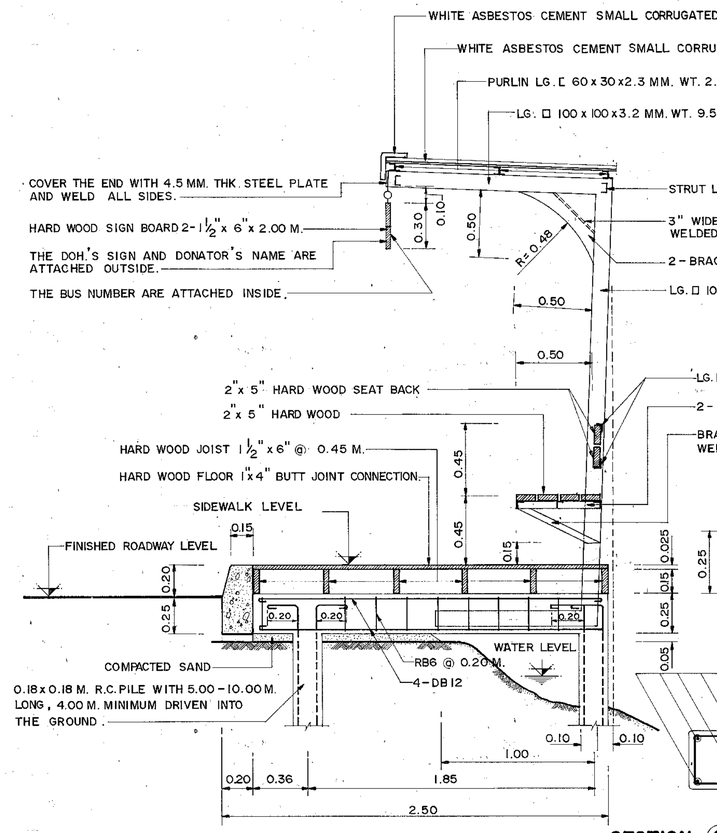


**SECTION (B)-(B)**
SCALE 1:20

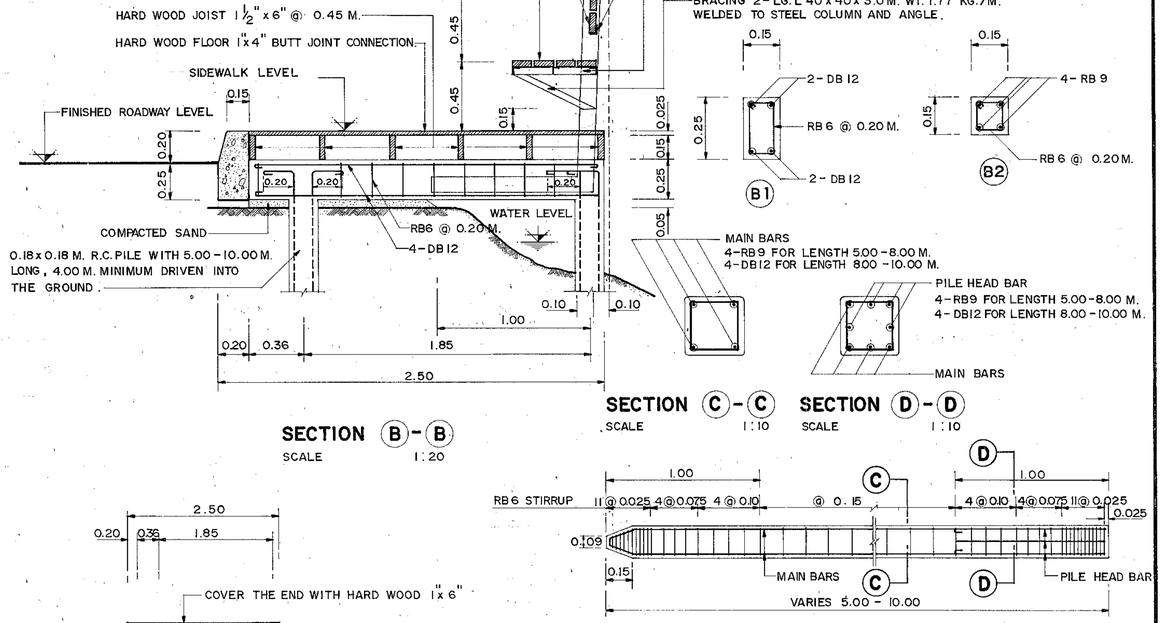


**SECTION (C)-(C)** SCALE 1:10

**SECTION (D)-(D)** SCALE 1:10

**0.18x0.18 M. PILE**
SCALE 1:20

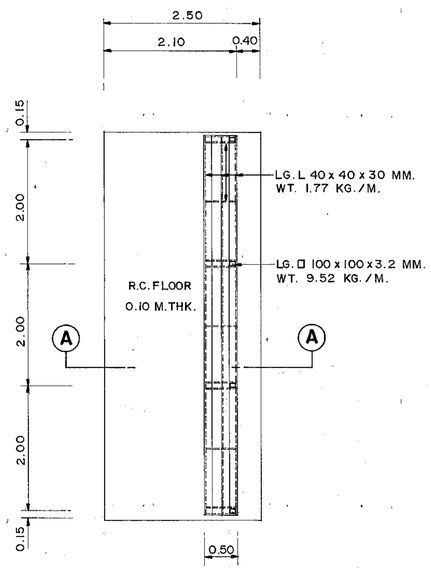


**FLOOR PLAN (FOUNDATION TYPE (A))**
SCALE 1:50

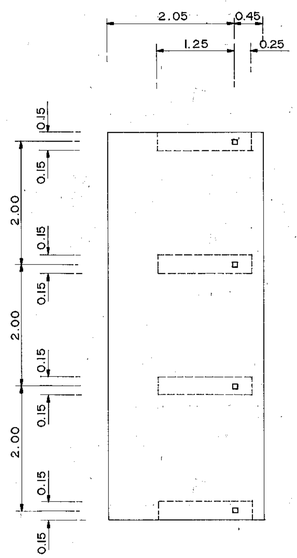

**FLOOR, FOOTING PLAN (FOUNDATION TYPE (A))**
SCALE 1:50

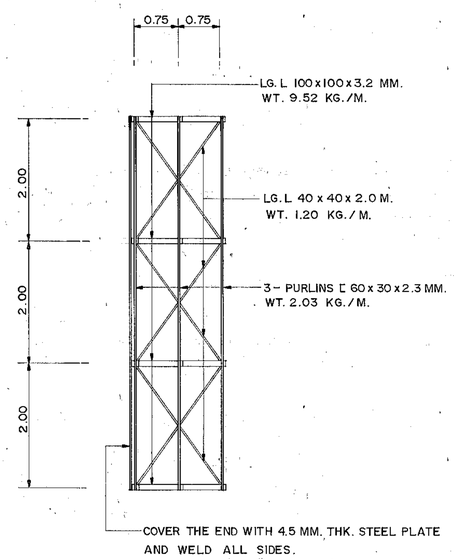


**ROOF FRAMING PLAN**
SCALE 1:50

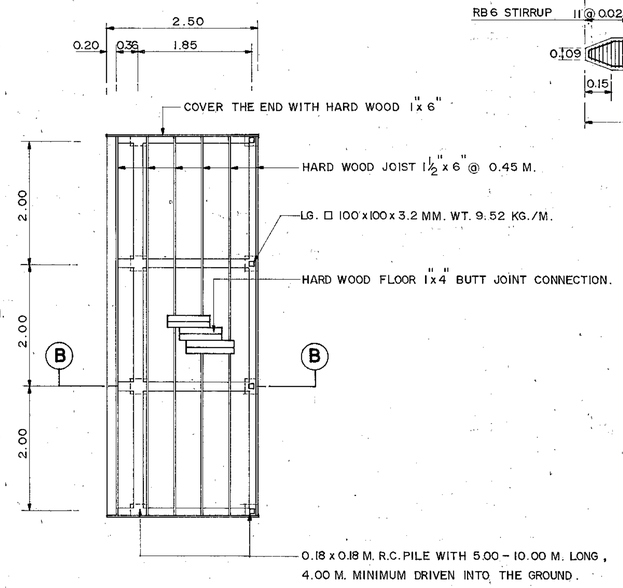


**FLOOR, JOIST, BEAM AND PILE PLAN (FOUNDATION TYPE (B))**
SCALE 1:50

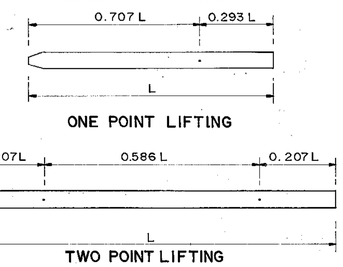


**PILE LIFTING LOCATIONS**
NOT TO SCALE

## NOTES :

1. ALL DIMENSIONS ARE IN METERS UNLESS OTHERWISE INDICATED.
2. THIS DRAWING SHALL BE USED IN COMBINATION WITH DWG. NO. MD-308

# KINGDOM OF THAILAND
MINISTRY OF TRANSPORT AND COMMUNICATIONS
DEPARTMENT OF HIGHWAYS

STANDARD DRAWING

BUS STOP SHELTER TYPE E-II

| | | |
|---|---|---|
| DESIGNED: D.O.H. & CONSULTANTS | CHECKED: | DATE JULY 1994 |
| SUBMITTED: (DIRECTOR OF LOCATION & DESIGN DIVISION) | | SCALE AS SHOWN |
| | | DWG. NO. MD-309 |
| APPROVED: (DIRECTOR GENERAL) | | SHEET NO. 100 |

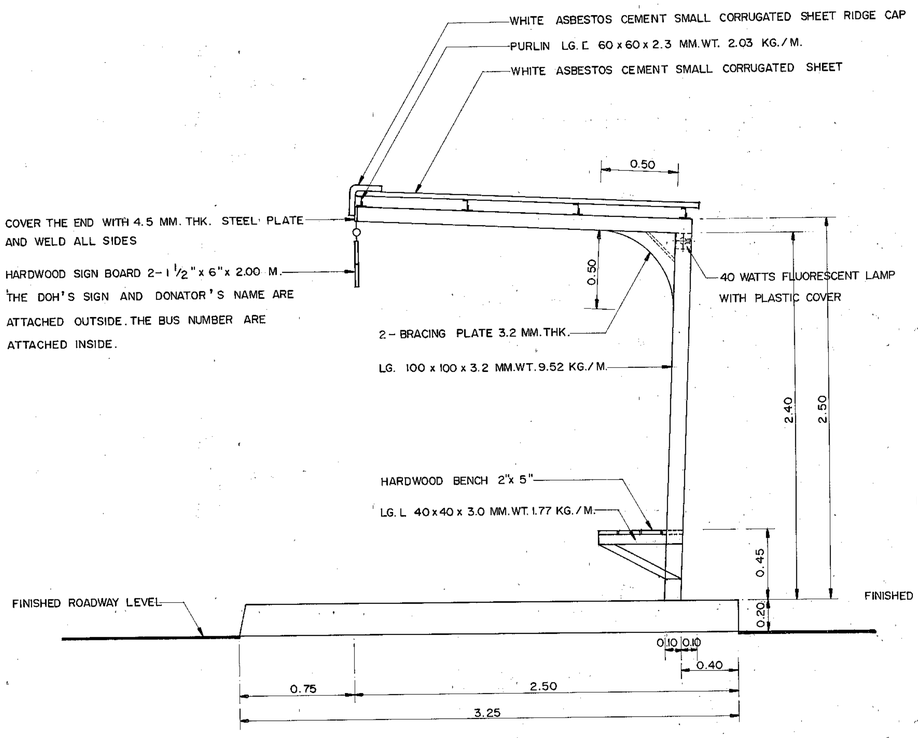


## SIDE ELEVATION

SCALE 1 : 20

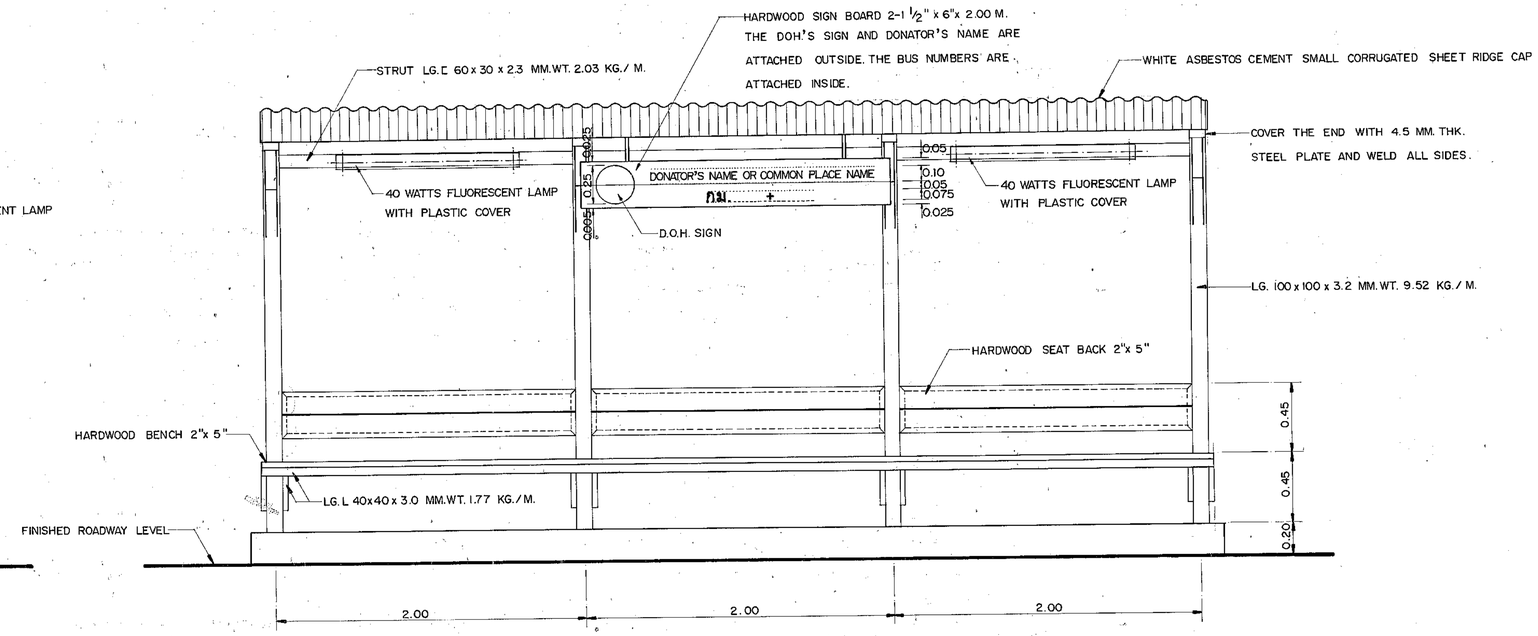


## FRONT ELEVATION

SCALE 1 : 20

## NOTES :

1. ALL DIMENSIONS ARE IN METERS UNLESS OTHERWISE INDICATED.
2. CONCRETE SHALL HAVE A MINIMUM ULTIMATE COMPRESSIVE STRENGTH OF 210 KSC. FOR 15 x 15 x 15 CM. CUBE AT 28 DAYS. AN APPROXIMATE MIX DESIGN PER CUBIC METER IS SUGGESTED AS FOLLOWS :

| | | |
|---|---|---|
| PORTLAND CEMENT TYPE 1 | 350 | KG. (MIN.) |
| SAND | 0.43 | $M^3$ |
| CRUSHED ROCK OR GRAVEL | 0.86 | $M^3$ |
| CONCRETE SLUMP | 10 | CM. (MAX.) |

3. CLEAR CONCRETE COVER SHALL BE 2.5 CM.
4. REINFORCING STEEL SHALL CONFORM TO TIS. 20 GRADE SR 24 FOR ROUND BARS AND TIS. 24 GRADE SD 30 FOR DEFORMED BARS.
5. WOODEN STRUCTURES SHALL BE HARDWOOD.
6. ALL WELDING SHALL BE 3/16" FILLET WELD AS AISC. SPECIFICATIONS.
7. STEEL STRUCTURES SHALL BE PAINTED WITH RUST-OLEUM OR OTHER EQUIVALENT IN DUSKY BLACK COLOR.
8. WOODEN PARTS SHALL BE POLISHED, NOT PAINTED.
9. ONE 40 WATTS FLUORESCENT SHALL BE USED FOR OUTER SPAN.
10. THIS DRAWING SHALL BE USED IN COMBINATION WITH DWG. NO. MD-311.

# KINGDOM OF THAILAND
## MINISTRY OF TRANSPORT AND COMMUNICATIONS
## DEPARTMENT OF HIGHWAYS

STANDARD DRAWING

BUS STOP SHELTER TYPE F-I

| | | |
|---|---|---|
| DESIGNED : D.O.H. & CONSULTANTS | CHECKED : | DATE JULY 1994 |
| SUBMITTED : (DIRECTOR OF LOCATION & DESIGN DIVISION) | | SCALE 1 : 20 |
| | | DWG. NO. MD-310 |
| APPROVED : (DIRECTOR GENERAL) | | SHEET NO. 101 |

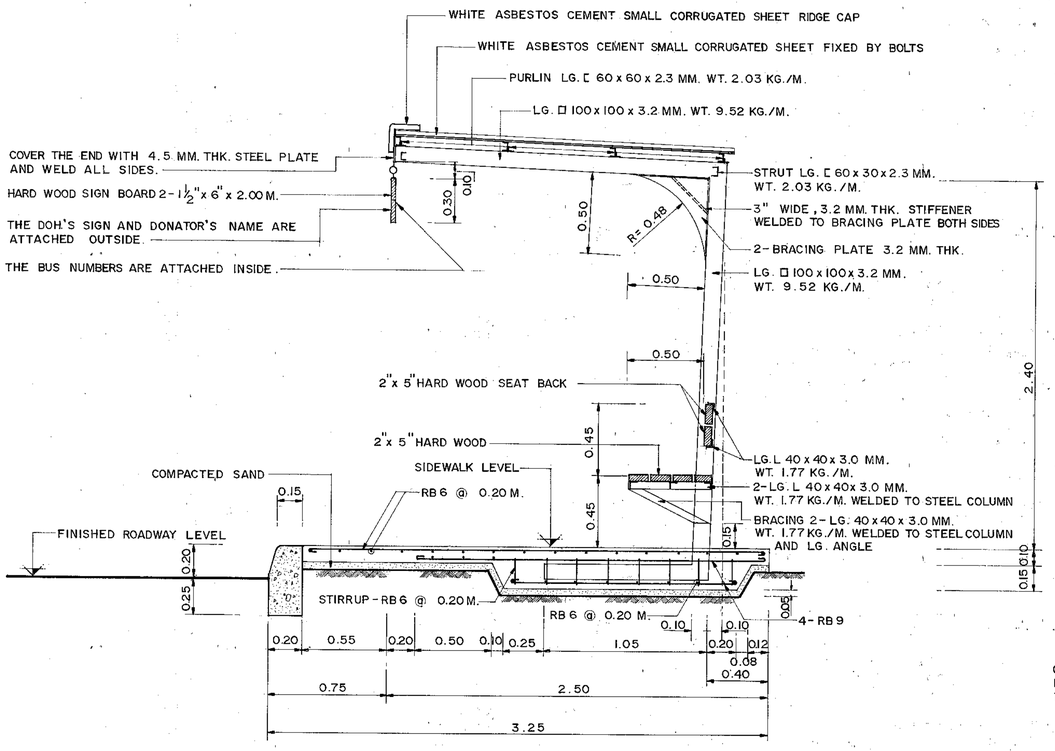


**SECTION (A)-(A)**
SCALE 1:20

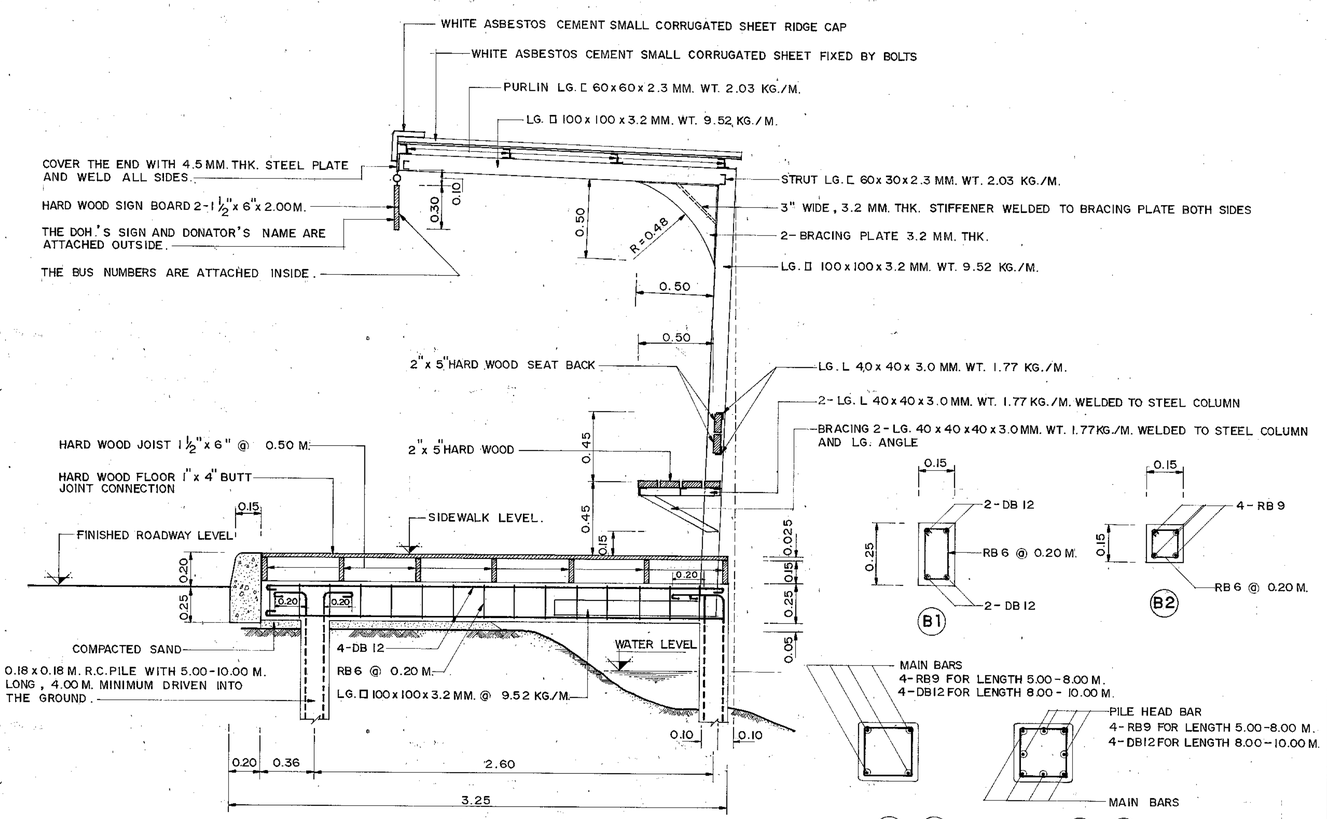


**SECTION (B)-(B)**
SCALE 1:20

**SECTION (C)-(C)**
SCALE 1:10

**SECTION (D)-(D)**
SCALE 1:10

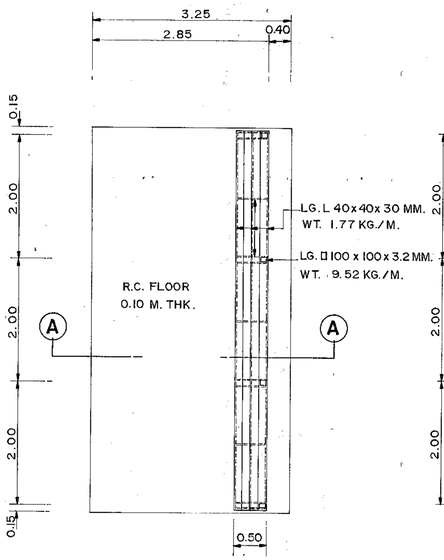


**FLOOR PLAN (FOUNDATION TYPE (A))**
SCALE 1:50

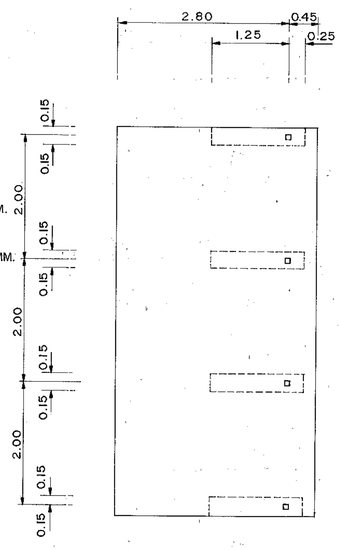


**FLOOR, FOOTING PLAN (FOUNDATION TYPE (A))**
SCALE 1:50

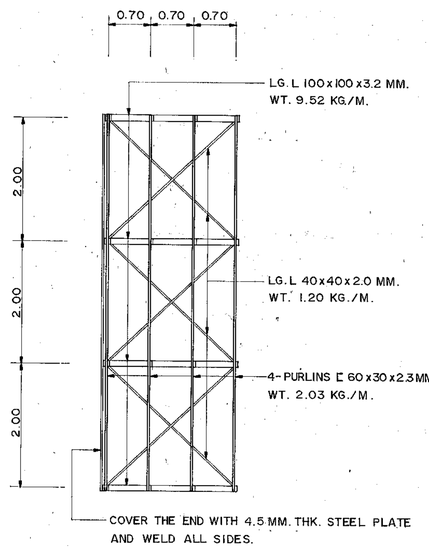


**ROOF FRAMING PLAN**
SCALE 1:50

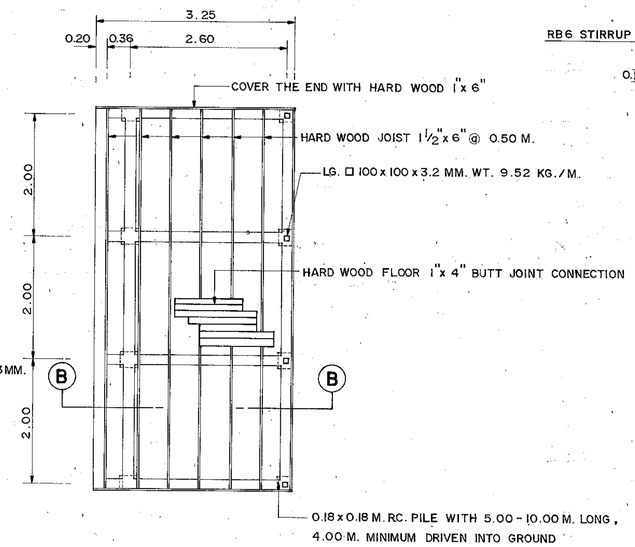


**FLOOR, JOIST, BEAM AND PILE PLAN (FOUNDATION TYPE (B))**
SCALE 1:50

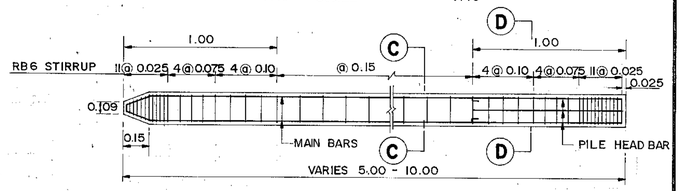


**0.18 x 0.18 M. PILE**
SCALE 1:20

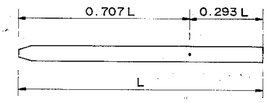


ONE POINT LIFTING

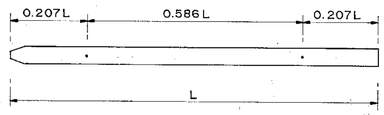


TWO POINT LIFTING

**PILE LIFTING LOCATIONS**
NOT TO SCALE

## NOTES :

1. ALL DIMENSIONS ARE IN METERS UNLESS OTHERWISE INDICATED.
2. THIS DRAWING SHALL BE USED IN COMBINATION WITH DWG. NO. MD - 310

# KINGDOM OF THAILAND
MINISTRY OF TRANSPORT AND COMMUNICATIONS
DEPARTMENT OF HIGHWAYS

STANDARD DRAWING

BUS STOP SHELTER TYPE F - II

| | | |
|---|---|---|
| DESIGNED : D.O.H. & CONSULTANTS | CHECKED : | DATE JULY 1994 |
| SUBMITTED : (DIRECTOR OF LOCATION & DESIGN DIVISION) | | SCALE AS SHOWN |
| | | DWG. NO. MD-311 |
| APPROVED : (DIRECTOR GENERAL) | | SHEET NO. 102 |

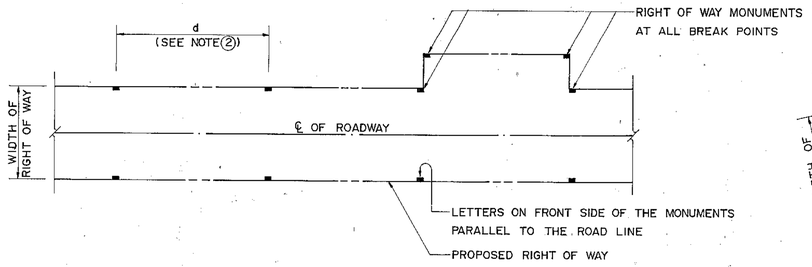


## R.O.W. MONUMENT IN STRAIGHT LINE
NOT TO SCALE

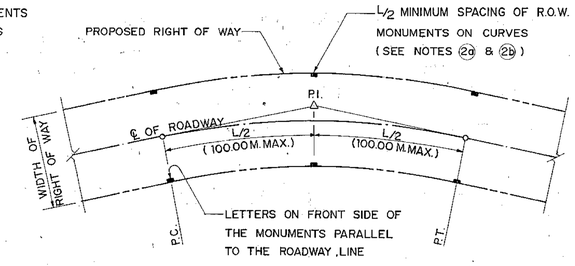


## R.O.W. MONUMENT IN HORIZONTAL CURVES
NOT TO SCALE

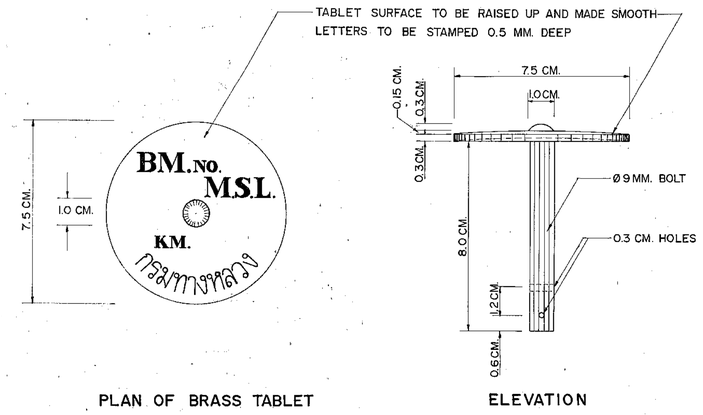


PLAN OF BRASS TABLET

ELEVATION

## BENCH MARK DETAILS
NOT TO SCALE

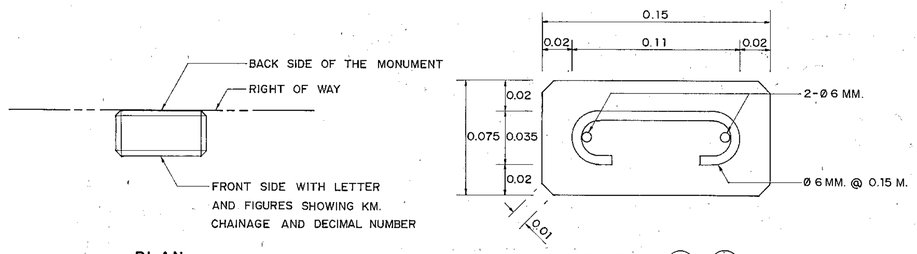


PLAN

SECTION (A)-(A)
SCALE 1 : 2

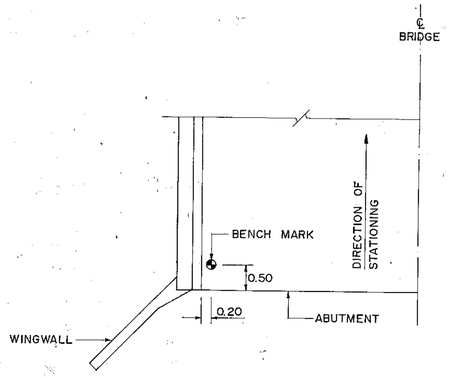


## BENCH MARK LOCATION DETAIL ON BRIDGE
NOT TO SCALE

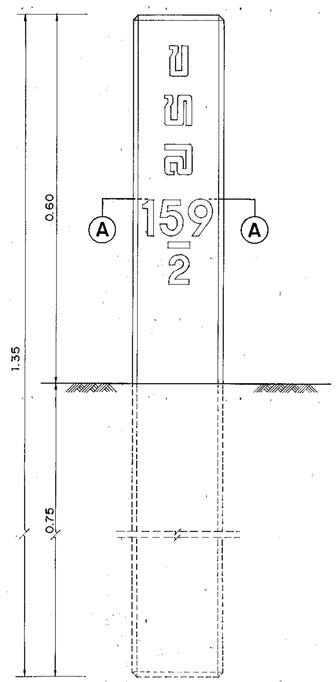


FRONT ELEVATION

## RIGHT OF WAY MONUMENT
SCALE 1 : 5

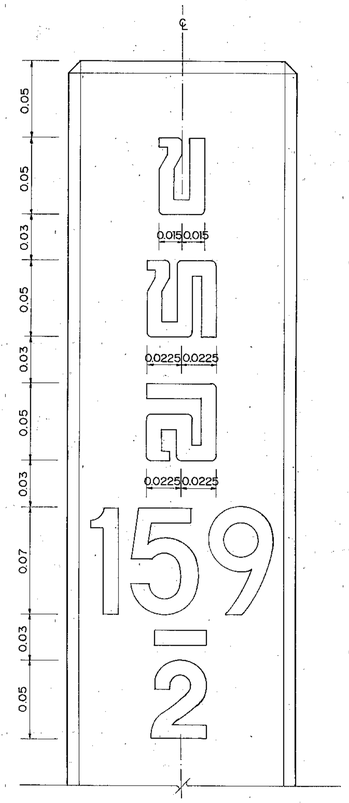


## STANDARD LETTERS & FIGURES
SCALE 1 : 2

## NOTES :

1. ALL DIMENSIONS ARE IN METERS UNLESS OTHERWISE INDICATED.
2. LOCATION OF R.O.W. MONUMENTS SHALL BE AS SHOWN ON THE PLAN AND SHALL BE SPECIFIED AS FOLLOWS :
   a) RURAL (RICE FIELD, WOOD AND ETC.) d = 100 M.
   b) URBAN (TOWNS AND VILLAGES) d = 25 M.
   c) AT ALL BREAK POINTS OF R.O.W.
   d) AT P.C., P.T. AND MIDDLE POINT OF HORIZONTAL CURVE
3. PAINTING OF R.O.W. POSTS.
   a) POSTS, WHITE
   b) LETTERS & FIGURES, BLACK
4. BLACK AND WHITE PAINTS MUST BE GLOSS ENAMAL PAINTS IN ACCORDANCE WITH TIS. 327 AND SHALL BE APPLIED IN 2-LAYERS.
5. LETTERS ARE DEPRESSED 1 CM. INTO THE CONCRETE.
6. POSTS SHALL BE ERECTED TRULY VERTICAL.
7. SIZES OF LETTERS AND FIGURES SHALL BE IN ACCORDANCE WITH DOH'S TRAFFIC CONTROL MANUAL AND THE DRAWING.
8. CONCRETE SHALL HAVE A MINIMUM ULTIMATE COMPRESSIVE STRENGTH OF 180 KSC. FOR 15x15x15 CM. CUBE AT 28 DAYS. AN APPROXIMATE MIX DESIGN PER CUBIC METER IS SUGGESTED AS FOLLOWS :

| | | |
|---|---|---|
| PORTLAND CEMENT TYPE 1 | 320 | KG.(MIN.) |
| SAND | 0.43 | $M^3$ |
| CRUSHED ROCK OR GRAVEL | 0.86 | $M^3$ |
| CONCRETE SLUMP | 10 | CM.(MAX.) |

9. RAINFORCING STEEL SHALL CONFORM TO TIS.20 GRADE SR 24

# KINGDOM OF THAILAND
MINISTRY OF TRANSPORT AND COMMUNICATIONS
DEPARTMENT OF HIGHWAYS

STANDARD DRAWING

RIGHT OF WAY MONUMENT & BENCH MARK

| | | |
|---|---|---|
| DESIGNED : D.O.H. & CONSULTANTS | CHECKED : | DATE JULY 1994 |
| SUBMITTED : (DIRECTOR OF LOCATION & DESIGN DIVISION) | | SCALE AS SHOWN |
| | | DWG. NO. MD-401 |
| APPROVED : (DIRECTOR GENERAL) | | SHEET NO. 103 |

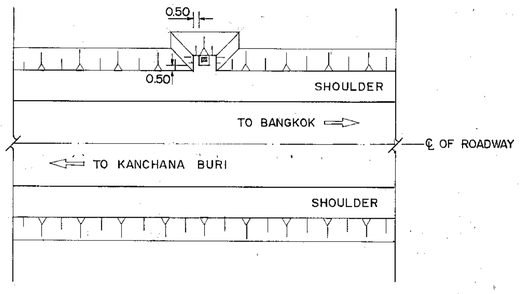


FOR TWO-LANE HIGHWAY

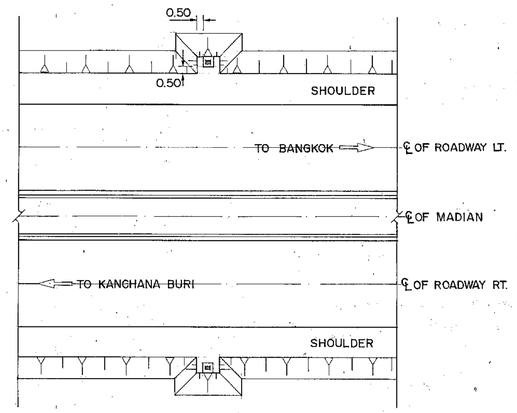


FOR DIVIDED HIGHWAY

PLAN
NOT TO SCALE

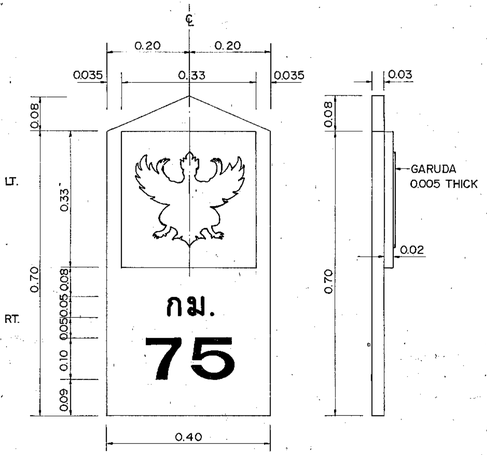


FRONT TILE

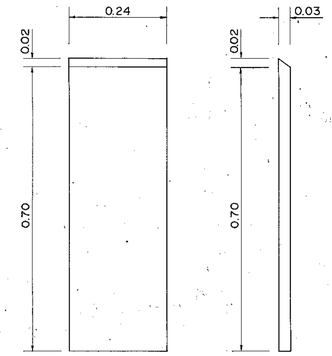


SIDE TILE

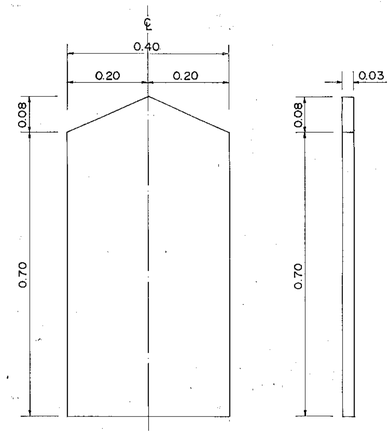


BACK TILE

TILE DETAIL
SCALE 1 : 7.5

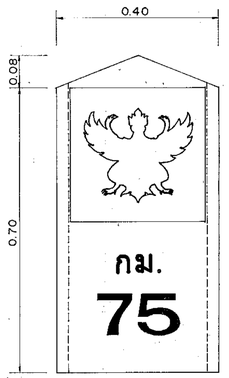


FRONT VIEW

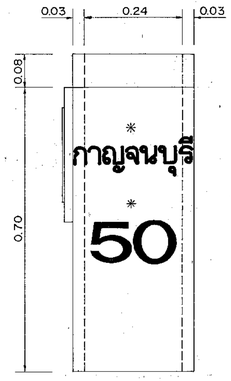


SIDE VIEW

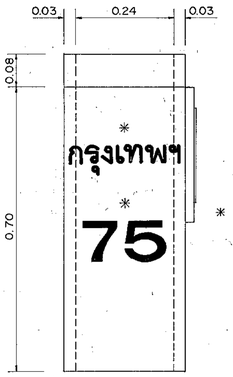


SIDE VIEW

* THE LETTERS MAY BE TWO DESTINATIONS.

KILOMETER STONE
SCALE 1 : 7.5

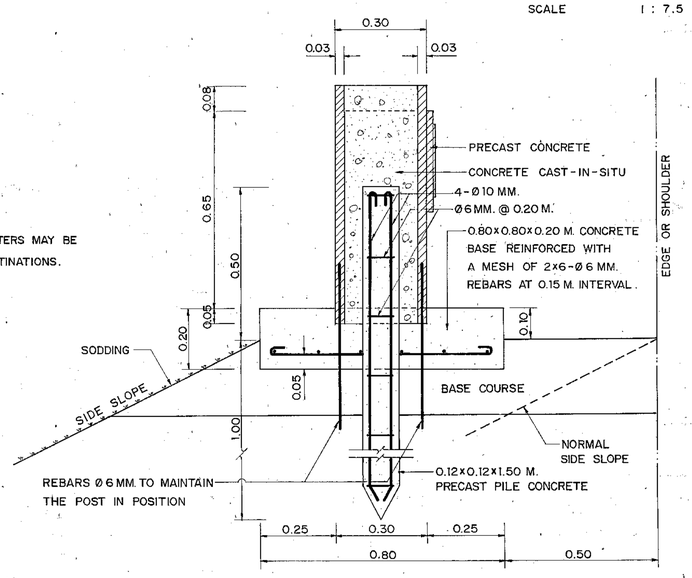


GENERAL DETAIL AT SHOULDER
SCALE 1 : 10

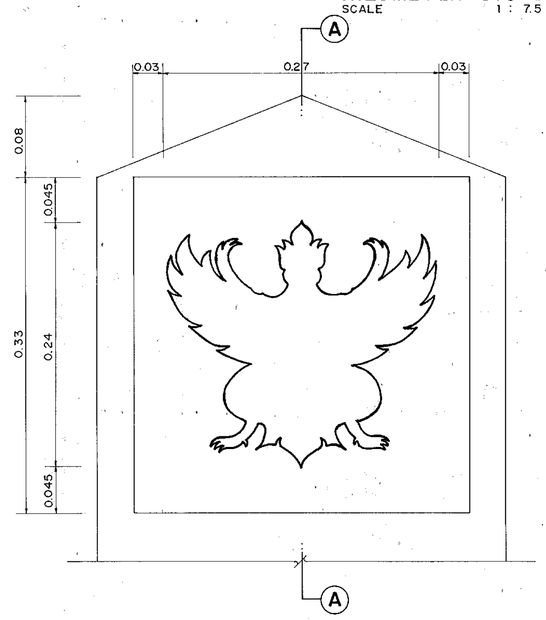


ELEVATION OF GARUDA
SCALE 1 : 3

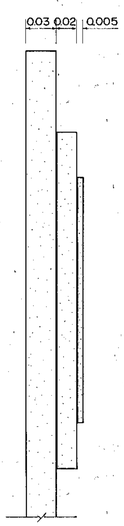


SECTION (A) - (A)
SCALE 1 : 3

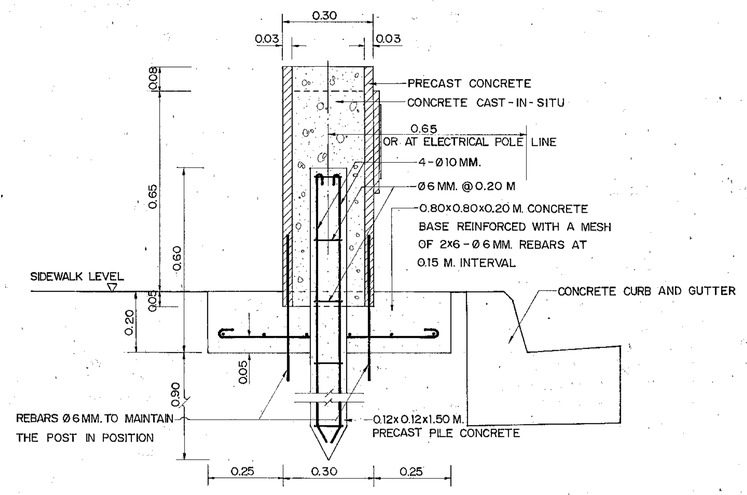


GENERAL DETAIL AT SIDEWALK AND VILLAGE SECTION
SCALE 1 : 10

## NOTES :

1. ALL DIMENSIONS ARE IN METERS UNLESS OTHERWISE INDICATED.
2. KILOMETER STONE SHALL BE PAINTED WHITE WITH ALL INSCRIPTIONS PAINTED BLACK AND WITH THE GARUDA FRAME PAINTED IN GREY LINE OF 1 CENTIMETER.
3. CONSTRUCTION METHOD
   ALL KILOMETER POST SHALL BE PRECAST IN SEPARATE PARTS AND INSTALLED INPLACE OR BY PRECASTING THE WHOLE UNIT AS SPECIFIED IN THE DRAWING WITH THE ENGINEER'S APPROVAL.
4. WHERE PENETRATION CANNOT BE ACHIEVED FOR PILING THE KILOMETER POST MAY BE ERECTED WITHOUT PILING WHEN APPROVED BY THE ENGINEER.
5. ALL INSCRIPTIONS SHOWN IN THIS DRAWING ARE SET UP FOR EXAMPLE PURPOSES ONLY.
6. THE KILOMETER STONE SHALL BE PLACED AT 1 KILOMETER INTERVAL AT 0.50 M. FROM EDGE OF LEFT SHOULDER OR AT 0.65 M. FROM CURB.
7. CONCRETE SHALL HAVE A MINIMUM ULTIMATE COMPRESSIVE STRENGTH OF 180 KSC. FOR 15x15x15 CM. CUBE AT 28 DAYS. AN APPROXIMATE MIX' DESIGN PER CUBIC METER IS SUGGESTED AS FOLLOW :

| | | |
|---|---|---|
| PORTLAND CEMENT TYPE 1 | 320 | KG.(MIN.) |
| SAND | 0.43 | $M^3$ |
| CRUSHED ROCK OR GRAVEL | 0.86 | $M^3$ |
| CONCRETE SLUMP | 10 | CM.(MAX.) |

8. REINFORCING STEEL SHALL CONFORM TO TIS. 20 GRADE SR 24.

**KINGDOM OF THAILAND**
**MINISTRY OF TRANSPORT AND COMMUNICATIONS**
**DEPARTMENT OF HIGHWAYS**

STANDARD DRAWING

KILOMETER STONE

| | | |
|---|---|---|
| DESIGNED : D.O.H. & CONSULTANTS | CHECKED : | DATE JULY 1994 |
| SUBMITTED : (DIRECTOR OF LOCATION & DESIGN DIVISION) | | SCALE AS SHOWN |
| | | DWG. NO. MD-402 |
| APPROVED : (DIRECTOR GENERAL) | | SHEET NO. 104 |

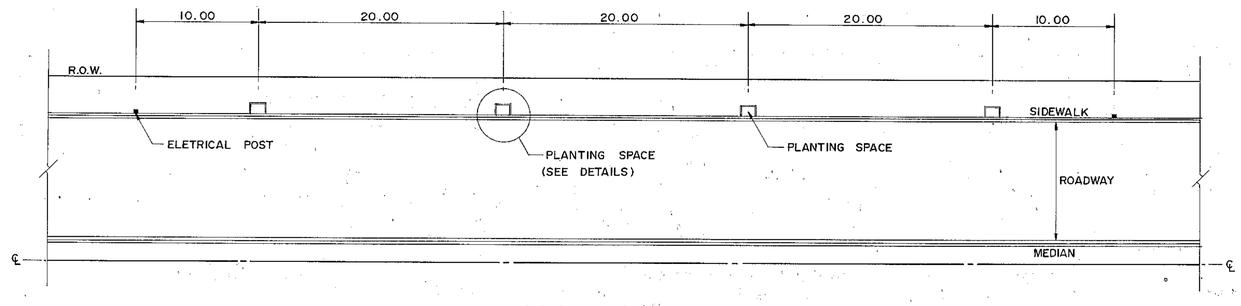


## PLANTING SPACE ON SIDEWALK

SCALE 1 : 250

## NOTES :

1. ALL DIMENSIONS ARE IN METERS UNLESS OTHERWISE INDICATED.
2. CONCRETE SHALL HAVE A MINIMUM ULTIMATE COMPRESSIVE STRENGTH OF 180 KSC. FOR 15 x 15 x 15 CM. CUBE AT 28 DAYS. AN APPROXIMATE MIX DESIGN PER CUBIC METER IS SUGGESTED AS FOLLOWS :

| | | |
|---|---|---|
| PORTLAND CEMENT TYPE I | 320 | KG. (MIN.) |
| SAND | 0.43 | $M^3$ |
| CRUSHED ROCK OR GRAVEL | 0.86 | $M^3$ |
| CONCRETE SLUMP | 10 | CM. (MAX.) |

3. EARTH FILL IN PLANTING SPACE SHALL BE THE PROPORTION OF SOIL : FERTILIZER : SAND EQUAL TO 4:3:2 BY VOLUME AND SHALL INCLUDE IN THE COST OF PLANTING SPACE.
4. PLANT TREES SHALL BE PAID FOR IN A SEPARATED ITEM.

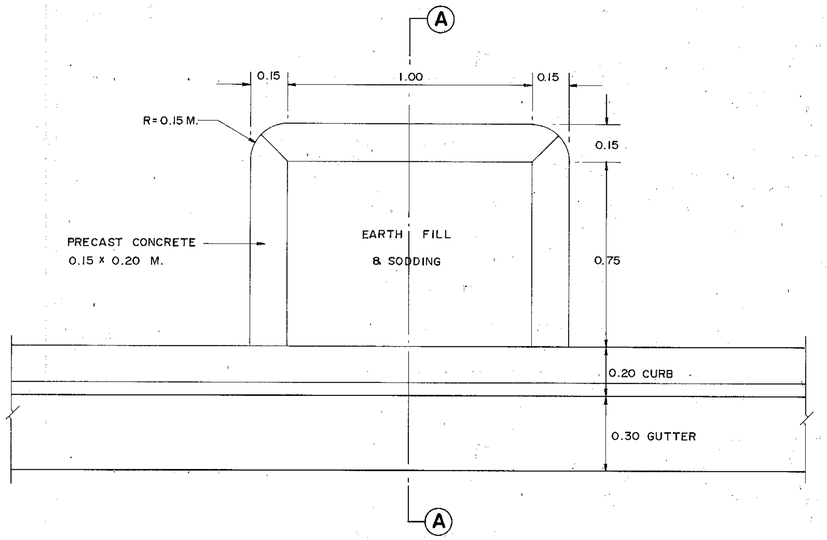


## PLANTING SPACE DETAILS

SCALE 1 : 12.5

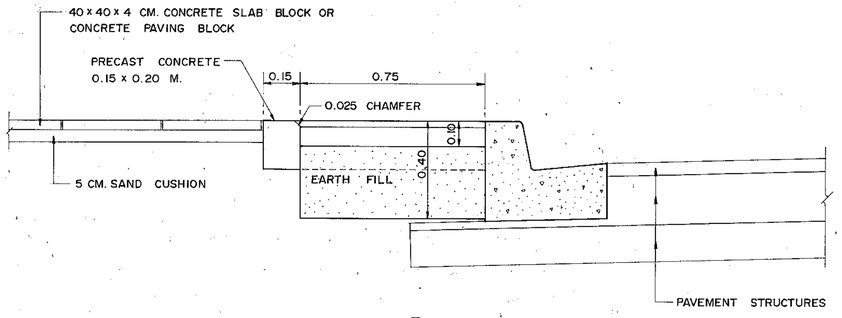


## SECTION A - A

SECTION 1 : 12.5

# KINGDOM OF THAILAND

MINISTRY OF TRANSPORT AND COMMUNICATIONS
DEPARTMENT OF HIGHWAYS

STANDARD DRAWING

PLANTING SPACE ON SIDEWALK

| | | |
|---|---|---|
| DESIGNED : D.O.H. & CONSULTANTS | CHECKED : | DATE JULY 1994 |
| SUBMITTED : (DIRECTOR OF LOCATION & DESIGN DIVISION) | | SCALE AS SHOWN |
| APPROVED : (DIRECTOR GENERAL) | | DWG. NO. MD-501 |
| | | SHEET NO. 105 |

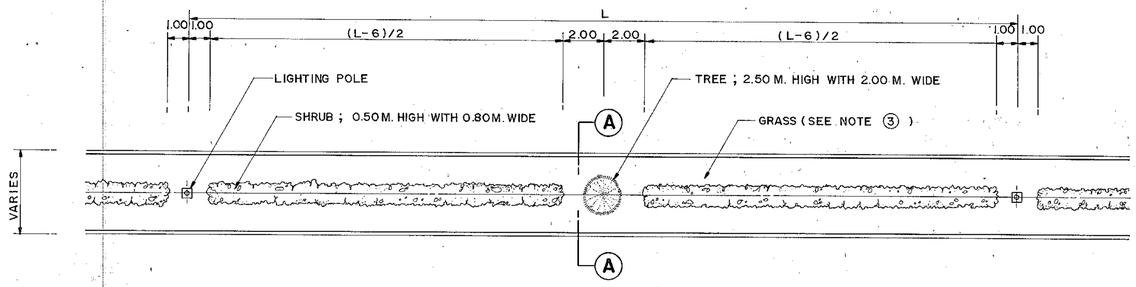


PLAN

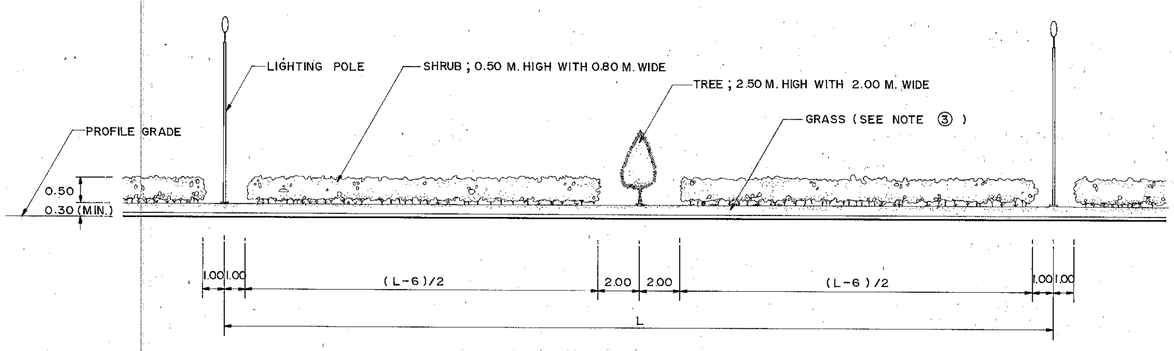


PROFILE

## DETAIL OF PLANTING AT MEDIAN
NOT TO SCALE

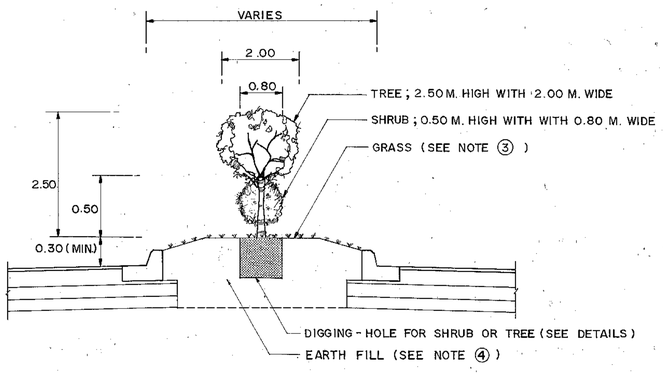


## SECTION (A) - (A)
NOT TO SCALE

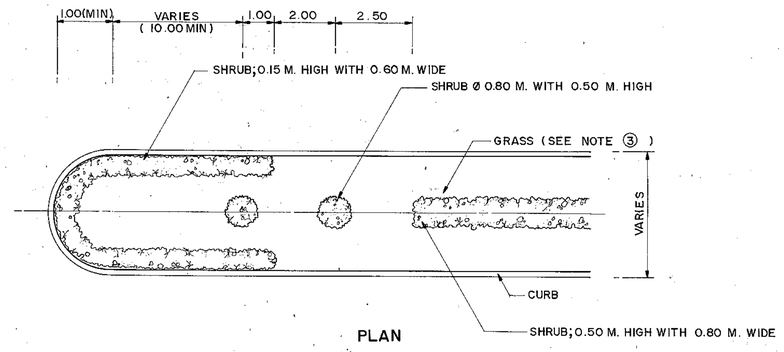


PLAN

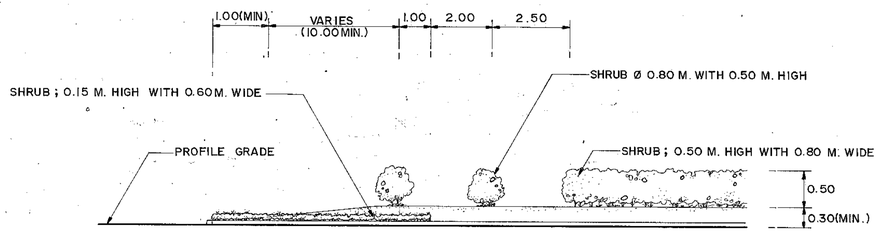


PROFILE

## BEGINNING OF MEDIAN
NOT TO SCALE

✱ THE DEPTH SHALL BE 0.30 M. FOR SHRUB; 0.15 M. HIGH WITH 0.60 M. WIDE.

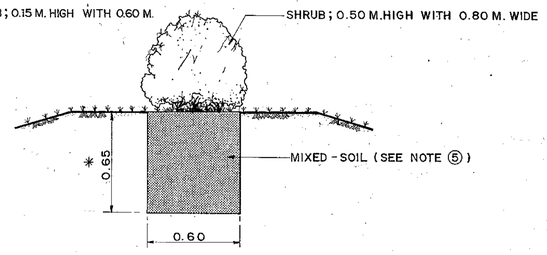


## DETAIL OF DIGGING - HOLE FOR SHRUB
SCALE 1 : 20

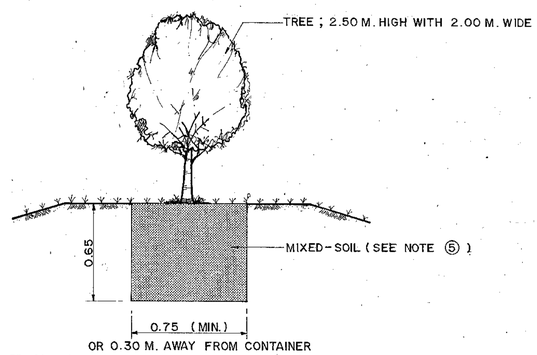


OR 0.30 M. AWAY FROM CONTAINER

## DETAIL OF DIGGING - HOLE FOR TREE
SCALE 1 : 20

## NOTES :

1. ALL DIMENSIONS ARE IN METERS UNLESS OTHERWISE INDICATED.
2. TREE AND SHRUB SHALL BE DIRECTED BY ENGINEERS OR OTHERWISE INDICATED IN DRAWINGS.
3. GRASS SHALL BE NUALNOI GRASS OR OTHERWISE INDICATED IN DRAWINGS.
4. EARTH FILL IN MEDIAN SHALL BE ORGANIC TOPSOIL THAT BE SUITABLE FOR GROWING GRASS.
5. MIXED - SOIL SHALL BE THE PROPORTION OF SOIL : FERTILIZER : SAND EQUAL TO 4 : 3 : 2 BY VOLUME.
6. THE CONTRACTOR SHALL BE RESPONSIBLE FOR MAINTAINING THE PLANTS UNTIL THE END PERIOD AS SPECIFIED IN THE SPECIAL PROVISIONS.

# KINGDOM OF THAILAND
MINISTRY OF TRANSPORT AND COMMUNICATIONS
DEPARTMENT OF HIGHWAYS

STANDARD DRAWING

PLANTING AND GRASSING IN MEDIANS

| | | |
|---|---|---|
| DESIGNED : D.O.H. & CONSULTANTS | CHECKED : | DATE JULY 1994 |
| SUBMITTED : (DIRECTOR OF LOCATION & DESIGN DIVISION) | | SCALE NONE |
| | | DWG. NO. MD-502 |
| APPROVED : (DIRECTOR GENERAL) | | SHEET NO. 106 |

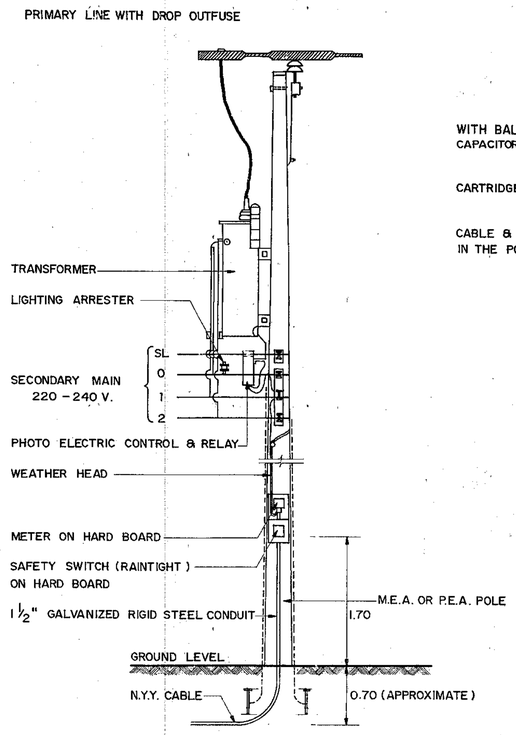


## DETAIL OF THE INSTALLATION OF TRANSFORMER, RELAY METER AND SAFETY SWITCH ON ELECTRICAL POLE

NOT TO SCALE

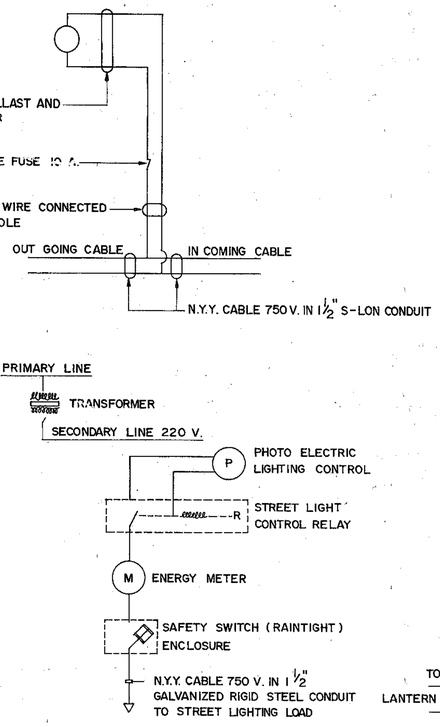


## CIRCUIT DIAGRAM

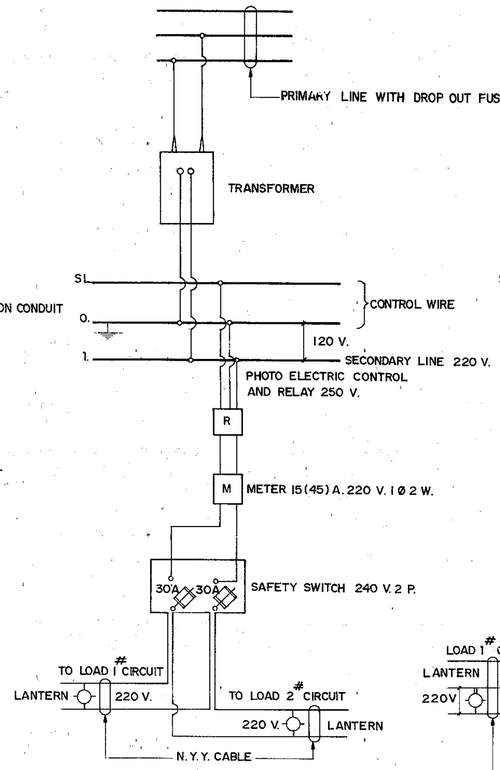


## BLOCK DIAGRAM (1)

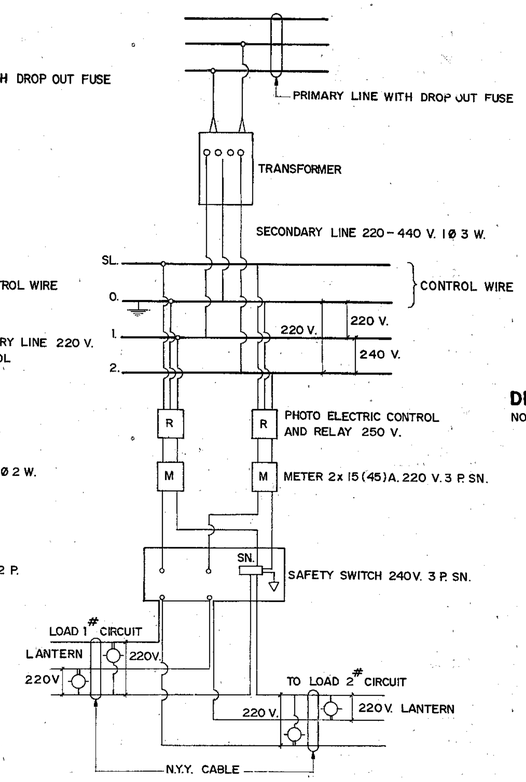


## BLOCK DIAGRAM (2)

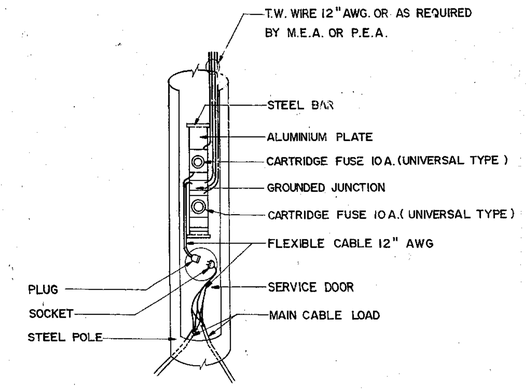


## DETAIL OF PULL OUT ELECTRICAL CONNECTION

NOT TO SCALE

## NOTES :

1. ALL DIMENSION ARE IN METERS UNLESS OTHERWISE INDICATED.
2. THE DETAIL DRAWING IS THE MINIMUM REQUIREMENT BY THE DOH. INCASE OF ANY DISCREPANCY BETWEEN THIS DRAWING AND M.E.A. OR P.E.A. STANDARDS ARISES, SUCH ORGANIZING STANDARDS SHALL PREVAIL AT THE EXPENSE OF THE CONTRACTOR.
3. THE ELEVATION OF LIGHTING POLE FOUNDATION SHALL BE LOCATED AS FOLLOWS :
   - 3.1 FOR LIGHTING POLE ON EDGE OF SHOULDER, RAISED MEDIAN AND SIDEWALK, THE TOP OF FOUNDATION LEVEL SHALL BE ABOUT 5 CM. HIGHER THAN GROUND LEVEL.
   - 3.2 FOR LIGHTING POLE IN DEPRESSED MEDIAN, THE TOP OF FOUNDATION LEVEL SHALL KEEP THE SAME ELEVATION AS ROAD PROFILE GRADE.
4. THE GALVANIZED RIGID STEEL CONDUIT (GRC.) SHALL CONFORM TO TIS. 770
5. GROUND ROD SHALL BE GALVANIZED NOT LESS THAN 85 MICRON.

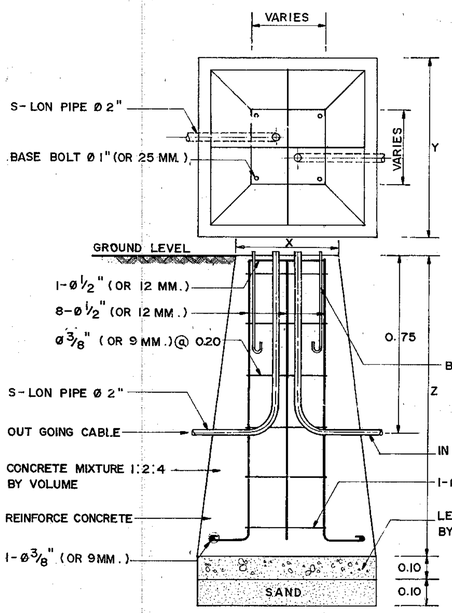


## LIGHTING POLE FOUNDATION DETAILS

NOT TO SCALE

| H | X (CM.) | Y (CM.) | Z (CM.) | REMARK |
|---|---|---|---|---|
| 9.00 | 40x40 | 80x80 | 120 | FOR SIDE ENTRY OR POST TOP MOUNTING |
| 10.00 | 45x45 | 90x90 | 120 | FOR SIDE ENTRY OR POST TOP MOUNTING |
| 11.00 | 45x45 | 90x90 | 120 | FOR SIDE ENTRY OR POST TOP MOUNTING |
| 12.00 | 50x50 | 100x100 | 120 | FOR SIDE ENTRY OR POST TOP MOUNTING |
| 14.00 | 65x65 | 130x130 | 150 | FOR POST TOP MOUNTING ONLY |

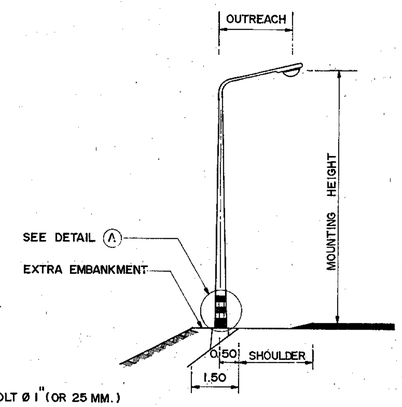


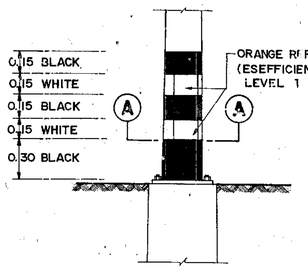


## DETAIL (A)

NOT TO SCALE

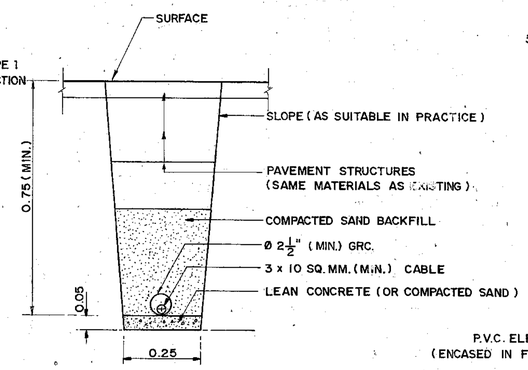


## DETAIL OF BURIAL CABLE UNDER ROADWAY

SCALE 1:10

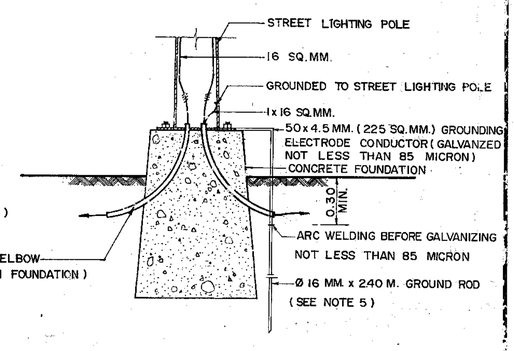


## DETAIL OF GROUND ROD

SCALE 1:20

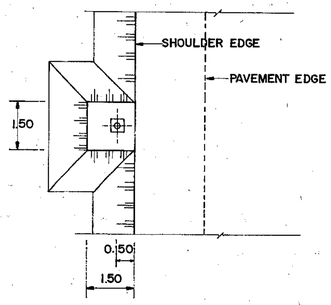


## LOCATION OF LIGHTING POLE

NOT TO SCALE

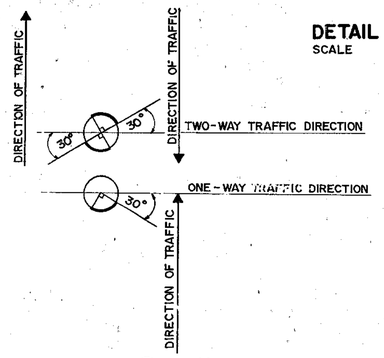


## SECTION (A) - (A)

NOT TO SCALE

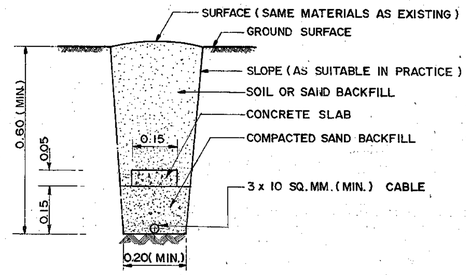


## DETAIL OF BURIAL CABLE UNDER GROUND

SCALE 1:10

# KINGDOM OF THAILAND
## MINISTRY OF TRANSPORT AND COMMUNICATIONS
## DEPARTMENT OF HIGHWAYS

STANDARD DRAWING

MISCELLANEOUS LIGHTING DETAILS

| | | |
|---|---|---|
| DESIGNED: D.O.H. & CONSULTANTS | CHECKED: | DATE |
| SUBMITTED: (DIRECTOR OF LOCATION & DESIGN DIVISION) | 15/2/40 | SCALE AS SHOWN |
| APPROVED: (DIRECTOR GENERAL) | 18/02/97 | DWG. NO. MD-601 |
| | | SHEET NO. 107 |

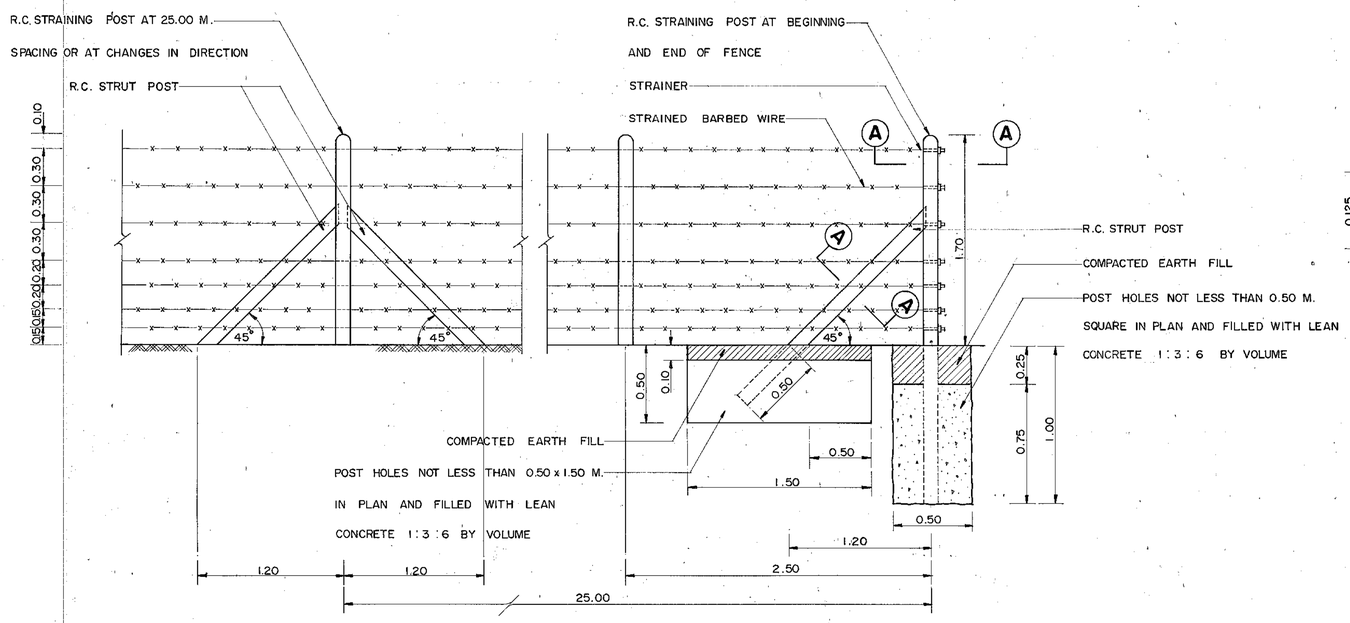


## FENCE TYPE I ( PROPERTY FENCE )

NOT TO SCALE

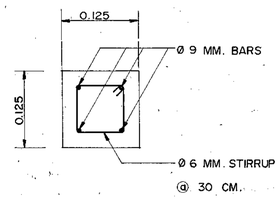


## SECTION (A)-(A)

SCALE 1 : 5

## NOTES :

1. ALL DIMENSIONS ARE IN METERS UNLESS OTHERWISE INDICATED.
2. CONSTRUCTION LOCATION OF THE TWO TYPES OF FENCES ARE SHOWN ON LAY OUT PLAN WHERE THE FENCES SHALL NOT BE OBSTRUCTED TRAFFIC, WHEN ACCIDENT ARE OCCURED TO THE FENCES.
3. CONCRETE SHALL HAVE A MINIMUM ULTIMATE COMPRESSIVE STRENGTH OF 180 KSC. FOR 15 x 15 x 15 CM. CUBE AT 28 DAYS. AN APPROXIMATE MIX DESIGN PER CUBIC METER IS SUGGESTED AS FOLLOWS

| | | |
|---|---|---|
| PORTLAND CEMENT TYPE 1 | 320 | KG. ( MIN. ) |
| SAND | 0.43 | $M^3$ |
| CRUSHED ROCK OR GRAVEL | 0.86 | $M^3$ |
| CONCRETE SLUMP | 10 | CM. (MAX.) |

4. REINFORCING STEEL SHALL CONFORM TO TIS. 20 GRADE SR. 24 .
5. WIRE NETTING SHALL BE GALVANIZED AS SPECIFIED BY TIS. 208 .
6. STRAINED BARBED WIRE SHALL BE GALVANIZED AS SPECIFIED BY TIS. 76 .
7. Ø 2" AND Ø 3" STEEL PIPE SHALL BE GALVANIZED.
8. THE COST OF FENCE TYPE I SHALL INCLUDE THE COST OF R.C. STRUT POST AND ITS FOUNDATION.
9. THE COST OF FENCE TYPE II SHALL INCLUDE THE COST OF 0.90 x 1.50 M. EXIT-ENTRANCE OF FENCE GATE, AND ITS FOUNDATION.
10. LOCATION OF EXIT-ENTRANCE OF FENCE GATE TYPE II SHALL BE AS DIRECTED BY THE ENGINEER.

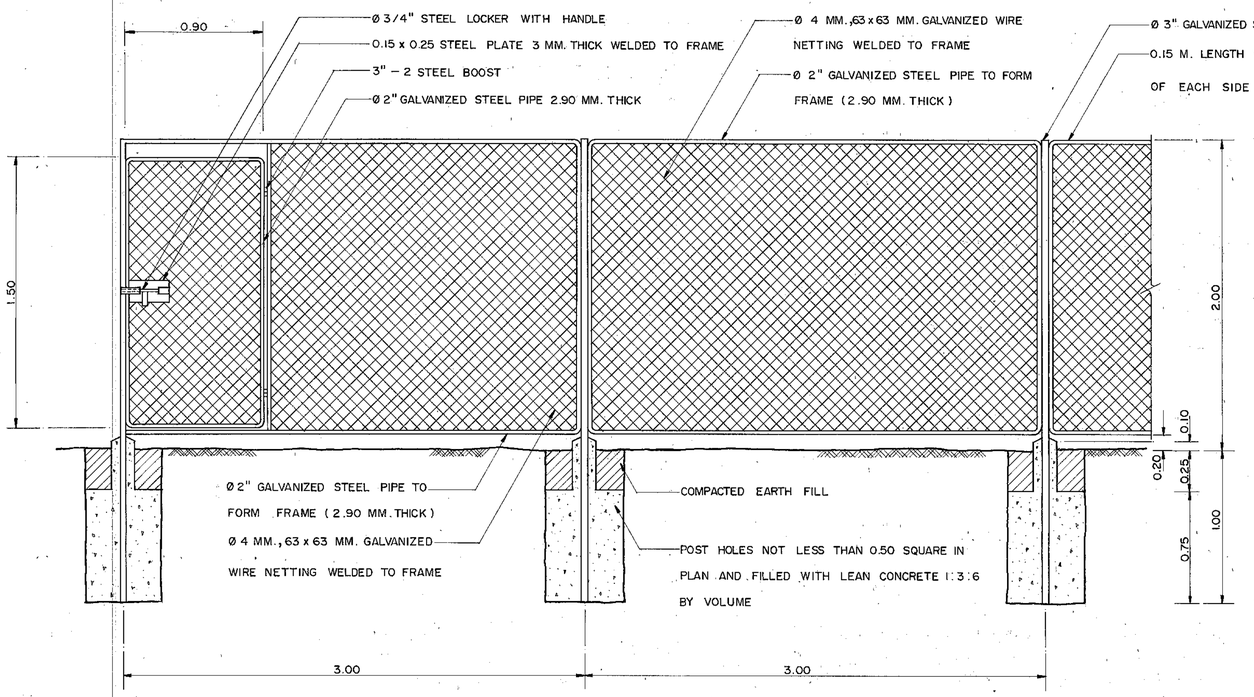


## FENCE TYPE II

SCALE 1 : 20

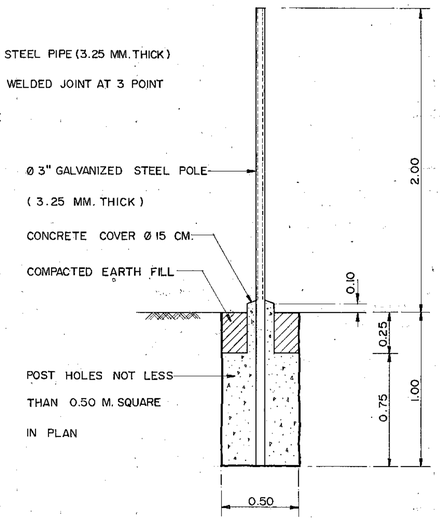


## SIDE VIEW

SCALE 1 : 20

# KINGDOM OF THAILAND

MINISTRY OF TRANSPORT AND COMMUNICATIONS
DEPARTMENT OF HIGHWAYS

STANDARD DRAWING

FENCING DETAILS

| | | |
|---|---|---|
| DESIGNED: D.O.H. & CONSULTANTS | CHECKED: | DATE JULY 1994 |
| SUBMITTED: (DIRECTOR OF LOCATION & DESIGN DIVISION) | | SCALE AS SHOWN |
| | | DWG. NO. MD–701 |
| APPROVED: (DIRECTOR GENERAL) | | SHEET NO. 108 |

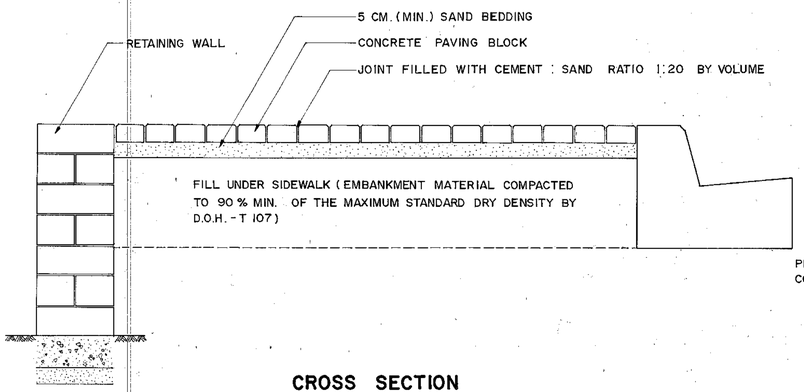


**CROSS SECTION**
SCALE 1 : 10

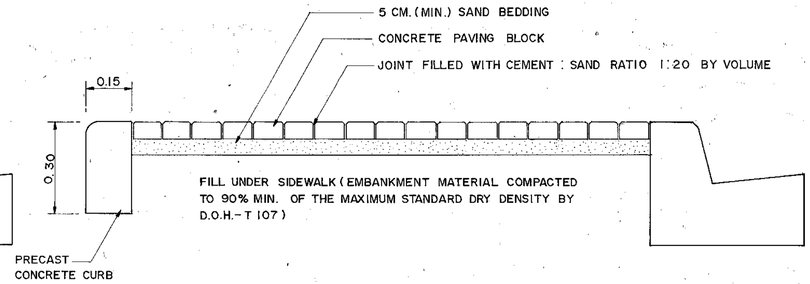


**CROSS SECTION**
SCALE 1 : 10

## NOTES :

1. ALL DIMENSIONS ARE IN METERS UNLESS OTHERWISE INDICATED.
2. SHAPE AND ARRANGEMENT SHALL BE SPECIFIED IN THE DRAWINGS OR DIRECTED BY THE ENGINEER.
3. COST OF CONCRETE PAVING BLOCK SHALL INCLUDE SAND BEDDING, JOINT FILLING, AND PRECAST CONCRETE CURB.
4. CONCRETE PAVING BLOCK SHALL CONFORM TO TIS. 827
5. JOINT SHALL BE FILLED WITH CEMENT : SAND RATIO 1:20 BY VOLUME

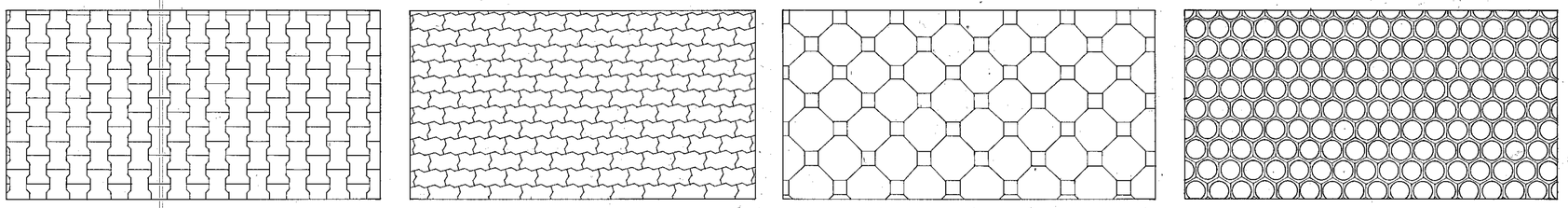

**SHAPE AND ARRANGEMENT OF CONCRETE PAVING BLOCK**
NOT TO SCALE

## PROPERTIES OF SAND BEDDING AND JOINT FILLING SAND

| SIEVE SIZE | % PASSING | |
|---|---|---|
| mm. | SAND BEDDING | JOINTING SAND |
| 9.52 | 100 | — |
| 4.75 | 95 — 100 | — |
| 2.36 | 80 — 100 | 100 |
| 1.18 | 50 — 85 | 90 — 100 |
| 0.60 | 25 — 60 | 60 — 90 |
| 0.30 | 10 — 30 | 30 — 60 |
| 0.15 | 5 — 15 | 15 — 30 |
| 0.075 | 0 — 5 | 10 — 20 |

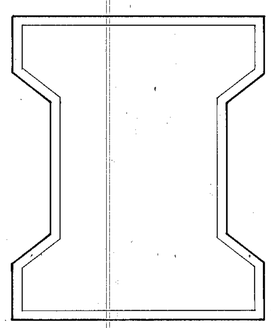

TOP VIEW

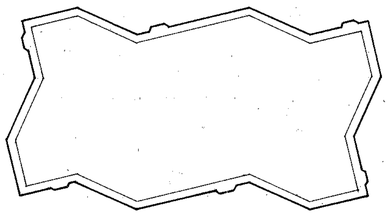

TOP VIEW

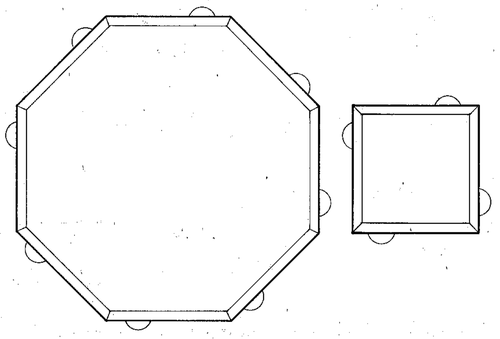

TOP VIEW

TOP VIEW

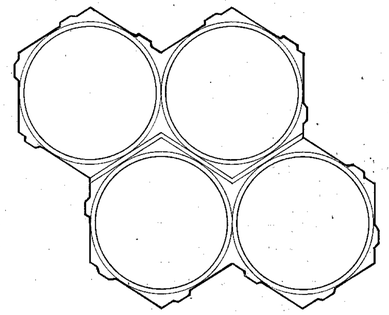

TOP VIEW

SIDE VIEW

**CONCRETE PAVING BLOCK BEHATON SHAPE**
SCALE 1 : 20

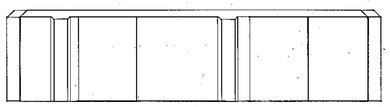

SIDE VIEW

**CONCRETE PAVING BLOCK UNI-PAVE SHAPE**
SCALE 1 : 20

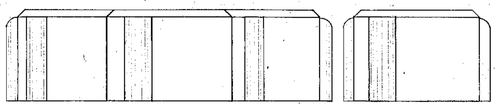

SIDE VIEW

**CONCRETE PAVING BLOCK OCTA-CUBE SHAPE**
SCALE 1 : 20

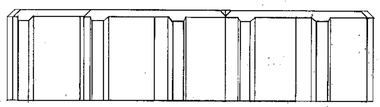

SIDE VIEW

**CONCRETE PAVING BLOCK DYWIDAG SHAPE**
SCALE 1 : 20

**KINGDOM OF THAILAND**
MINISTRY OF TRANSPORT AND COMMUNICATIONS
DEPARTMENT OF HIGHWAYS

STANDARD DRAWING

CONCRETE PAVING BLOCK

| | | |
|---|---|---|
| DESIGNED : D.O.H. & CONSULTANTS | CHECKED : | DATE JULY 1994 |
| SUBMITTED : (DIRECTOR OF LOCATION & DESIGN DIVISION) | | SCALE AS SHOWN |
| APPROVED : (DIRECTOR GENERAL) | | DWG. NO. MD-801 |
| | | SHEET NO. 109 |

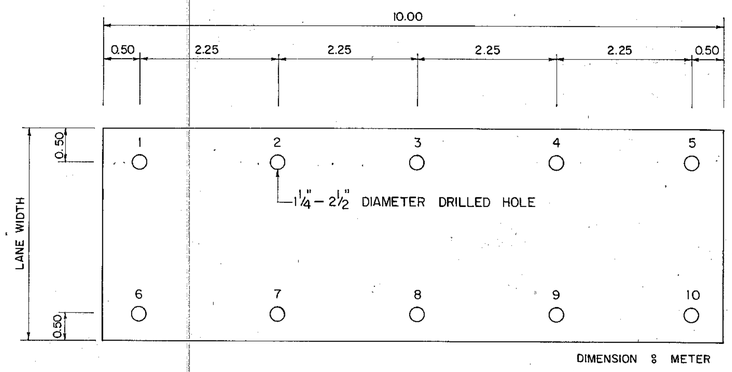


FIGURE 1 PLAN OF DRILLING FOR CEMENT MORTAR COMPRESSION ALONG THE PUMPING JOINT

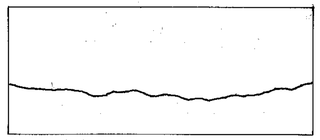

FIGURE 2A LONGITUDINAL SINGLE CRACK

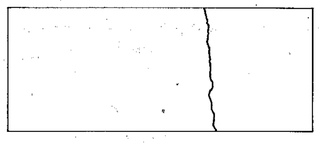

FIGURE 2B TRANSVERSE SINGLE CRACK

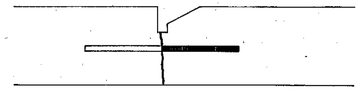

FIGURE 3 SECTION OF SHALLOW JOINT SPALLING

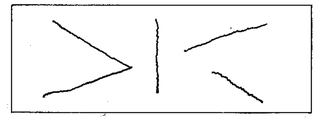

FIGURE 4 SHATTERED SLAB

## 1. PUMPING JOINT REPAIRING

### 1.1 MATERIALS

MATERIALS TO BE MIXED AND COMPRESSED INTO CONCRETE JOINT ARE AS FOLLOW :

1.1.1 **SOIL :** SOIL SHALL BE SILTY SAND WHICH IS PASSED THROUGH SIEVE NO. 10 (100 %) AND SIEVE NO. 200 (0-50 %), AND IS NON - PLASTIC MATERIAL.

1.1.2 **CEMENT :** CEMENT SHALL BE TYPE III. OR EQUIVALENT.

1.1.3 **WATER :** WATER WHICH IS USED FOR MIXING WITH SILTY SAND AND CEMENT MUST BE CLEAN.

1.1.4 **ADDITIVE :** ADDITIVE IS USED TO INCREASE CAPACITY OF FLOWING THROUGH SPACE UNDER THE CONCRETE SLAB. THE ADDITIVE SHOULD HAVE SUITABLE QUALITIES AND WILL BE APPROVED BY THE ENGINEER.

1.1.5 **MIXED RATIO :** MIXED RATIO OF SLURRY CEMENT MORTAR IS AS FOLLOW :

- SILTY SAND 20 LITERS
- CEMENT 6 LITERS
- WATER 10 LITERS
- ADDITIVE AS NECESSARY

THE MIXED RATIO OF SLURRY CEMENT MORTAR CAN BE ADJUSTED BY THE ENGINEER TO OPTIMUM MIXED RATIO FOR SUITABLE CAPACITY OF FILLING INTO THE SPACE UNDER CONCRETE PAVEMENT.

### 1.2 WORK PREPARING

**STEPS ARE AS FOLLOW :**

1.2.1 THE ENGINEER SPECIFIES THE CONCRETE SLABS TO BE REPAIRED. THE CONCRETE SLABS SHOULD HAVE THE SIGN OF DEFLECTION OR THE TRANSVERSE OR LONGITUDINAL CRACKS THAT CAN BE CLEARLY SEEN.

1.2.2 EACH REPAIRED CONCRETE SLAB SHOULD BE MARKED AS THE DRILLING POSITION IN ORDER TO COMPRESS SLURRY CEMENT MORTAR THROUGH, AS SHOWN IN FIGURE 1.

1.2.3 DRILL THE MARKED POSITION, AS SHOWN IN STEP 1.2.2.

1.2.4 PREPARE THE SET OF SLURRY CEMENT MOTAR MIXER, SLURRY CEMENT MORTAR COMPRESSOR, AND OTHER NECESSARY MATERIALS.

### 1.3 SLURRY CEMENT MORTAR COMPRESSING

1.3.1 COMPRESS THE SLURRY CEMENT MORTAR INTO THE FIRST HOLE (SHOWN IN FIGURE 1). GENTLY DO IT AT FIRST SO THAT THE CEMENT CAN FLOW FREELY AND REGULARLY AND THEN INCREASINGLY COMPRESS THE CEMENT TILL THE MACHINE CAN NO LONGER PRESS.

WHILE COMPRESSING THE SLURRY CEMENT MORTAR INTO THE HOLE NO. 1, THERE MAY BE SOME SLURRY CEMENT MORTAR SLIPPED INTO AND FILLED THE HOLES NO. 2 OR NO. 6 AS IN FIGURE 1. IF SO, CORK OR PLUG THOSE PARTICULAR HOLES AND DO NOT COMPRESS THE SLURRY CEMENT MOTAR INTO THEM.

1.3.2 MOVE THE COMPRESSOR TO THE HOLE NO. 2 AND DO THE SAME WAY AS TO THE HOLE NO. 1. THEN MOVE TO THE REST OF THE HOLES.

1.3.3 UNCORK OR UNPLUG THE HOLES. SOME HOLES MAY NEED TO BE REFILLED A LITTLE MORE, THEN SHAPE THE HOLES.

1.3.4 LET THE SLURRY CEMENT MORTAR DRY FOR AT LEAST 12 HOURS. THE TRAFFIC SHALL NEED TO BE STOPPED.

### 1.4 JOINT SEALER CHANGING

IN THE AREA WHERE HAVING PUMPING AND SLURRY CEMENT MORTAR COMPRESSING UNDERNEATH THE CONCRETE SLAB, THE OLD JOINT SEALER HAS TO BE REMOVED AND REPLACED BY A NEW JOINT SEALER. THE JOINT SEALER SHOULD BE STANDARDIZED AS SUGGESTED BY THE DEPARTMENT OF HIGHWAYS.

## 2. TRANSVERSE AND LONGITUDINAL SINGLE CRACK REPAIRING (STRUCTURAL CRACK)

THE TRANSVERSE AND LONGITUDINAL CRACKS ALONG THE THICK OF CONCRETE SLAB CAN BE REPAIRED BY EPOXY COMPRESSING.

THE REPAIR CAN BEGIN WITH COMPRESSING EPOXY INTO SMALL POROUS TUBES LAID ALONG THE CRACKS. THE DISTANCE BETWEEN TUBES IS ABOUT 5-10 CM. THE EPOXY COMPRESSED UNDER HIGH PRESSURE WILL SPREAD THROUGH THE CRACKS ALONG THE THICK OF THE CONCRETE SLAB.

THE ENGINEER MAY USE OTHER APPROPRIATE WAYS OF USING EPOXY AS FOR A BETTER RESULT. THE AIMED RESULT IS THAT THE CRACKS ARE SO WELL SEALED THAT WATER CAN NOT PASS THROUGH.

THE TRANSVERSE AND LONGITUDINAL CRACKS ARE AS SHOWN IN FIGURE 2.

## 3. SHALLOW JOINT SPALLING REPAIRING

SHALLOW SPALLING OF JOINT CAN BE REPAIRED BY USING EPOXY MORTAR AND FOLLOWING THESE STEPS :

3.1 CUT THE CONCRETE AROUND THE AREA OF SPALLING AND MAKE A SHAPE OF RECTANGLE (AS DEEP AS 2.5 – 3.0 CM.)

3.2 SPREAD THE CUT WITH EPOXY MORTAR WHICH IS A APPROPRIATE COMBINATION OF COARSE SAND AND EPOXY.

THE USE OF EPOXY FOR REPAIRING WORK SHOULD FOLLOW THE INSTRUCTIONS OF THE PRODUCER AND ALSO THE APPROVAL OF THE ENGINEER.

SECTION OF SHALLOW SPALLING IS SHOWN IN FIGURE 3.

## 4. SHATTERED SLAB REPAIRING

TO REPAIR THE SHATTERED SLAB WITH MORE THAN TWO TRANSVERSE AND LONGITUDINAL CRACKS, THE CONCRETE SLAB NEEDS TO BE DISMANTLED AND THEN THE PIECES OF CONCRETE SLAB ARE TO BE REMOVED. THEN THE AREA WHERE THE SLABS WHERE REMOVED IS POURED NEW CONCRETE OVER. THE METHOD IS AS FOLLOW :

4.1 DISMANTLE THE SHATTERED SLABS BY USING A MACHINE AND REMOVE THEM.

4.2 EXAMINE AND MAKE SURE IF THE SUBBASE OR SAND CUSHION OR CRUSHED ROCK ARE IN GOOD CONDITION. COMPACTION SHOULD BE THE STANDARD OF THE DEPARTMENT OF HIGHWAYS. SOFT SPOT FOUND IN ANY AREA HAS TO BE REMOVED AND REPLACED BY SUITABLE MATERIALS SUCH AS CRUSHED ROCK OR SAND.

4.3 MAKE A HOLE AND PUT A NEW SET OF TIE BAR INTO IT. (REMOVE THE OLD SET)

4.4 THE NEW SET OF TIE BAR SHOULD BE PUT IN THE POSITION NEAR THE POSITION OF THE PREVIOUS SET.

4.5 POURING CONCRETE OVER THE PREPARED AREA. THE MATERIALS AND CONCRETE MIXING AS WELL AS CONSTRUCTION TECHNIQUES AND BROOMING SHALL BE IN ACCORDANCE WITH THE STANDARD DH. – S. 409 REGARDING " REGULATIONS OF CONSTRUCTION CONTROL OF PORTLAND CEMENT CONCRETE PAVEMENT." REQUIRE NECESSARILY FOR CONCRETE MIXING AS :

- PORTLAND CEMENT 350 KG./M$^3$
- WATER/CEMET RATIO 0.55 BY WEIGHT
- CONCRETE SLUMP 3-7 CM.

CONCRETE SHALL HAVE A MINIMUM ULTIMATE COMPRESSIVE STRENGTH OF 325 KSC. FOR 15 X 15 X 15 CM. CUBE AT 28 DAYS.

4.6 JOINTS SHALL BE CUT WITHIN THE SUITABLE TIME (APPROXIMATE 4-12 HOURS AFTER CONCRETE POURING)

4.7 MASTIC JOINT SEALER SHALL BE DROPPED AS APPROVAL BY THE ENGINEER.

## NOTES

1. FOR THE CONCRETE SLAB WITH TRANSVERSE AND LONGITUDINAL SINGLE CRACKS, THE ELEVATION OF THE CONCRETE SLAB IN THE CRACK POSITION NEEDS TO BE CHECKED. IN CASE OF SETTLEMENT OR PAVEMENT STRUCTURES DAMAGE WHICH CAN CAUSE CRACKS AND WHICH WILL NOT BE REPAIRED BY METHOD (2), THE METHOD (4) SHALL BE BROUGHT TO CONSIDERATION.
2. TRANSVERSE AND LONGITUDINAL SINGLE CRACKS ON CONCRETE SLABS, AFTER REPAIRING BY USING EPOXY, SHOULD BE CONSIDERED TO COMPRESS SLURRY CEMENT MORTAR INTO THE UNDERNEATH OF THE SLABS.

**KINGDOM OF THAILAND**
**MINISTRY OF TRANSPORT AND COMMUNICATIONS**
**DEPARTMENT OF HIGHWAYS**

STANDARD DRAWING

CONCRETE PAVEMENT REPAIRING

| | | |
|---|---|---|
| DESIGNED: D.O.H. & CONSULTANTS | CHECKED: | DATE JULY 1994 |
| SUBMITTED: (DIRECTOR OF LOCATION & DESIGN DIVISION) | | SCALE NONE |
| APPROVED: FOR (DIRECTOR GENERAL) | | DWG. NO. MD-802 |
| | | SHEET NO. 110 |

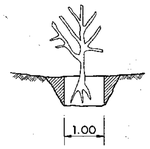


1.) TRIMMING

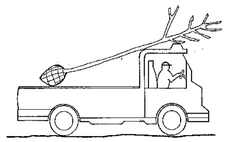

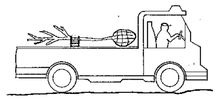

5.) REMOVING

9.) WATERING

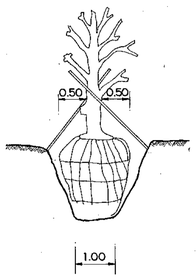


2.) DIGGING UP

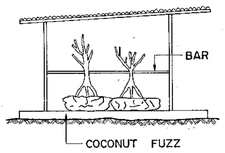


6.) GREEN HOUSE

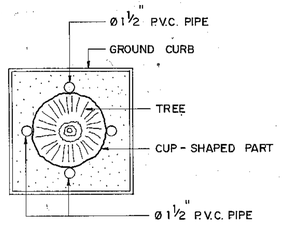


10.) P.V.C. PIPE INSTALLATION

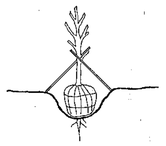

3.) TAPROOT CUTTING

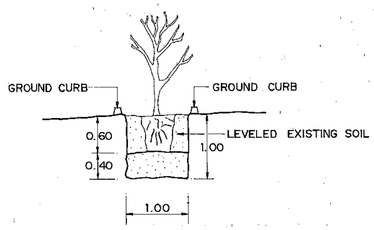


7.) PLANTING

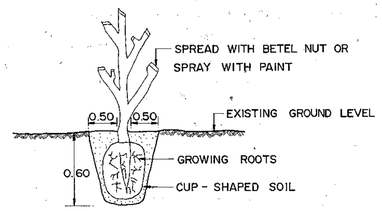


CUP - SHAPED SOIL DETAILS

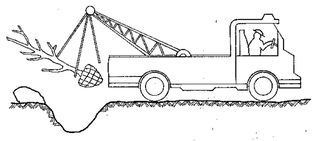

4.) CRANE - TRUCK OR TRIPOD USING

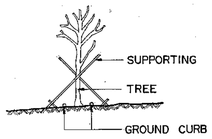


8.) SUPPORTING

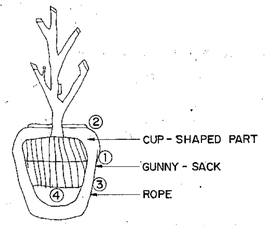


① THE FIRST TIED ROPE
② THE SECOND TIED ROPE
③ THE THIRD TIED ROPE
④ WRAP THE TREE BY THE KNITTED ROPE (SIMILAR TO WRAP THE WATERMELON)

DETAIL OF WRAPING THE CUP - SHAPED SOIL WITH GUNNY - SACK

# METHOD OF TRANSPLANTING TREE

## 1. TRIMMING UNNECESSARY BRANCHES TO REDUCE VAPORIZATION OF THE TREE

1.1 CUT MINOR BRANCHES AND LEAVE THEM ABOUT 2".

1.2 SPRAY THE CUTS WITH PAINT OR SPREAD WITH BETEL NUT TO PREVENT FUNGAL INFECTION.

## 2. DIGGING AROUND THE TREE TO REMOVE

2.1 TOOLS USED ARE A HOE, A SPADE AND A CROWBAR.

2.2 BIGGER OR MORE COMPLICATED GARDENING EQUIPMENTS MAY BE USED FOR BIGGER TREES.

2.3 DIG AROUND THE TREE - 50 CM. AWAY FROM IT AND 60 CM. DEEP. USE THE COWBAR TO CUT OFF ONCE THE MINOR ROOT.

2.4 ADJUST THE SOIL AND MAKE THE SHAPE OF A CUP. (DO NOT CUT THE TAPROOT)

2.5 WRAP AROUND THE TRUNK WHICH IS BEING COVERED WITH CUP-SHAPED SOIL, WITH THE GUNNY-SACK. SEW THEM TOGETHER IF TWO OR THREE GUNNY-SACKS ARE USED. TIE UP THE GUNNY-SACKS TIGHTLY WITH 30-50 ROPES. USED TRIPOD TO HOLD UP THE TRUNK AT LEAST 21 DAYS. (SOME KINDS OF TREE DO NOT) WATERING THE GUNNY-SACKS, NOT LET TO DRY.

2.6 AFTER 21 DAYS EXAMINE THE TREE, IF IN SUITABLE STATE, DIG INTO THE GROUND FOR ANOTHER 10-20 CM. CUT THE TAPROOT WITH A CROWBAR. WHILE IN THIS STEP, DO IT QUICKLY TO PROJECT THE REST OF THE TREE.

## 3. REMOVING

3.1 WRAP AROUND THE TRUCK WITH GUNNY-SACKS.

3.2 LIFT THE TREE FROM THE GROUND BY CRANE-TRUCK OR TRIPOD AND HELP WITH MAN.

3.3 LAY THE TREE DOWN ON THE BACK OF TRUCK. UNDER THE TREE ARE PIECES OF GUNNY-SACKS PUT TO PROTECT THE TREE. IF THE TREE IS LONGER THAN THE BACK OF TRUCK, LAY THE BRANCHES-SIDE ON THE TRUCK'S ROOF AND THE CUP-SHAPED SIDE IN THE TRUCK.

## 4. PRE - TRANSPLANTING

4.1 BEFORE TRANSPLANTING, THE TREE SHOULD BE PUT TO REST IN THE GREENHOUSE ABOUT 1 MONTH FOR SOFTWOOD OR 3 MONTHS FOR HARDWOOD. COVER THE CUP-SHAPED PART WITH COCONUT FUZZ AND WAIT TILL THE LEAVES GROW.

4.2 THE TREE MAY BE PUT ANYWHERE OTHER THAN IN THE GREENHOUSE AS LONG AS THERE IS NO STRONG SUNLIGHT.

## 5. PLANTING

5.1 PREPARE A HOLE OF SIZE 1.00 × 1.00 × 1.00 M.

5.2 FILL THE HOLE WITH THE EXISTING SOIL WHICH IS USED AS BASE 40 CM. THICK. PUT THE TREE ON THE BASE SURFACE AND THE CUP-SHAPED PART IS AT THE SAME LEVEL AS THE EXISTING GROUND AT TOP OF THE HOLE.

5.3 BEFORE FILLING THE HOLE, USE DILUTE LYSOL SOLUTION TO PREVENT FUNGAL INFECTION BY POURING THE DILUTE LYSOL SOLUTION ON THE CUP-SHAPED PART OF THE TREE. THEN FILL THE HOLE WITH THE EXISTING SOIL AND COMPACTED LOOSELY UNTIL THE SOIL IS AT THE SAME LEVEL AS THE CUP-SHAPED PART.

5.4 BUILD GROUND CURB AROUND THE TREE. THIS MAKES A CIRCLE WITH A RADIUS OF 1 METER. THE CURB WILL HELP PRESERVE WATER.

5.5 USE TRIPOD TO SUPPORT THE TREE.

## 6. MAINTENANCE

6.1 WATERING SHOULD BE DONE IN THE MORNING AND EVENING.

6.2 WATER SPRAYING (BY SPRINGER) SHOULD BE DONE FROM THE TOP TO THE BOTTOM OF THE TREE (VERTICALLY).

6.3 IT USUALLY TAKES ONE MONTH FOR YOUNG LEAVES TO COME OUT DEPENDING UPON THE KINDS OF TREES. IN THE MEAN TIME, THE TREE WILL ALSO NEED VITAMIN B-1 AT THE MORNING AND EVENING TWICE A WEEK.

6.4 AFTER ONE MONTH, FERTILIZER (15-30-15) SHALL BE GIVEN.

6.5 IF IT IS DIFFICULT TO WATER THE TREE SINCE IT IS GROWN ON HARD SOIL SUCH AS LATERITE SOIL, THE P.V.C. PIPE Ø 2 1/2" WHICH IS 30 CM. LONG WITH DRILLED AT BOTTOM PART Ø 5 MM. WITH 10 CM. APART SHALL BE BURIED. WATER WILL BE SENT THROUGH THE P.V.C. PIPE TO THE ROOTS.

6.6 THE TREE WILL GROW IN ABOUT 3 MONTHS AND WILL COMPLETELY GROW IN ONE YEAR.

## NOTES :

1. ALL DIMENSIONS ARE IN METERS UNLESS OTHERWISE INDICATED.
2. TREES TO BE TRANSPLANTED FROM THE AREA OF CONSTRUCTION ARE TREES THAT ARE IMPORTANT TO BE RESERVED AS DIRECTED BY THE ENGINEER.
3. THE ENGINEER WILL ASSIGN A NEW LOCATION TO PLANT OUT OF ROADBED.
4. WHEN THE TRANSPLANTING ARE FINISHED, THE CONTRACTOR SHALL TAKE CARE OF THE TREES UNTIL THEY ARE BIG ENOUGH.
5. THE DEPARTMENT OF HIGHWAYS SHALL PAY ACCORDING TO THE SIGNS OF THE GROWTH OF THE TREES. IF THE TREES DIE, THE DEPARTMENT OF HIGHWAYS SHALL PAY ACCORDING TO ROADWAY EXCAVATION (EARTH). THE NUMBERS OF THE HOLES SHALL BE TAKEN INTO ACCOUNT.

**KINGDOM OF THAILAND**
**MINISTRY OF TRANSPORT AND COMMUNICATIONS**
**DEPARTMENT OF HIGHWAYS**

STANDARD DRAWING

METHOD OF TRANSPLANTING TREE

| | | |
|---|---|---|
| DESIGNED : D.O.H. & CONSULTANTS | CHECKED : | DATE JULY 1994 |
| SUBMITTED : (DIRECTOR OF LOCATION & DESIGN DIVISION) | | SCALE NONE |
| | | DWG. NO. MD-901 |
| APPROVED : (DIRECTOR GENERAL) | | SHEET NO. 111 |

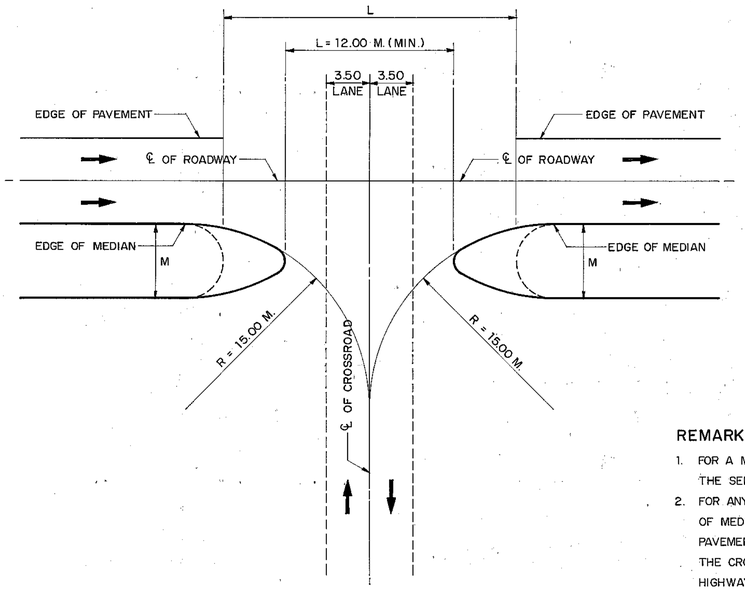


## MINIMUM DESIGN OF MEDIAN OPENINGS
## ( SU DESIGN VEHICLE, CONTROL RADIUS OF 15.00 M. )

NOT TO SCALE

### TABLE : MINIMUM DESIGN OF MEDIAN OPENINGS
### ( SU DESIGN VEHICLE, CONTROL RADIUS OF 15.00 M. )

| WIDTH OF MEDIAN, M (M.) | L = MINIMUM LENGTH OF MEDIAN OPENING (M.) | |
|---|---|---|
| | SEMICIRCULAR | BULLET NOSE |
| 1.20 | 29.00 | 29.00 |
| 1.80 | 28.00 | 23.00 |
| 2.40 | 28.00 | 20.00 |
| 3.00 | 27.00 | 19.00 |
| 3.60 | 26.00 | 17.00 |
| 4.20 | 26.00 | 16.00 |
| 4.80 | 25.00 | 15.00 |
| 6.00 | 24.00 | 13.00 |
| 7.20 | 23.00 | 12.00 MIN. |
| 8.40 | 22.00 | 12.00 MIN. |
| 9.60 | 20.00 | 12.00 MIN. |
| 10.80 | 19.00 | 12.00 MIN. |
| 12.00 | 18.00 | 12.00 MIN. |
| 15.00 | 15.00 | 12.00 MIN. |
| 18.00 | 12.00 MIN. | 12.00 MIN. |
| 21.00 | 12.00 MIN. | 12.00 MIN. |

### REMARKS :

1. FOR A MEDIAN WIDTH OF 3.00 M. OR MORE THE BULLET NOSE IS SUPERIOR TO THE SEMICIRCULAR END AND PREFERABLY SHOULD BE USED IN DESIGN.
2. FOR ANY THREE-OR-FOUR-LEG INTERSECTION ON A DIVIDED HIGHWAY THE LENGTH OF MEDIAN OPENING SHOULD BE AS GREAT AS THE WIDTH OF CROSSROAD ROADWAY PAVEMENT PLUS SHOULDER AND IN NO CASE LESS THAN 12.00 M. ( OR LESS THAN THE CROSSROAD PAVEMENT PLUS 2.40 M. ) WHERE THE CROSSROAD IS A DIVIDED HIGHWAY, THE LENGTH OF OPENING SHOULD BE AT LEAST EQUAL TO THE WIDTH OF THE CROSSROAD ROADWAYS PLUS THAT OF THE MEDIAN PLUS 2.40 M.
3. THE USED OF A 12.00 M. MINIMUM LENGTH OF OPENING WITHOUT REGARD TO THE WIDTH OF MEDIAN OR THE CONTROL RADIUS SHOULD NOT BE CONSIDERED EXCEPT AT VERY MINOR CROSSROADS. THE 12.00 M. MINIMUM LENGTH OF OPENING DOES NOT APPLY TO OPENINGS FOR U-TURNS, AS DISCUSSED ELSEWHERE.

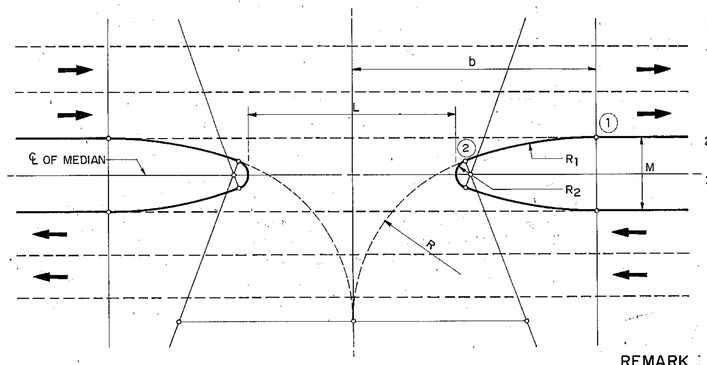


### REMARKS :

1. RADIUS $R_1$ MAY VARY FROM ABOUT 24.00 - 120.00 M. OR MORE THE TABULATED VALUES SHOWN, 27.00 M., 45.00 M. AND 69.00 M. ARE ESTABLISHED MINIMUM RADII FOR TURNING SPEEDS OF 32, 40, AND 48 KPH. RESPECTIVELY.
2. TO AVOID A LARGE OPENING, R SHOULD BE HELD TO A REASONABLE MINIMUM, E.G., 15.00 M., AS USED IN FIGURE.
3. THE LENGTH OF MEDIAN OPENING IS GOVERNED BY THE RADII. FOR MEDIANS WIDER THAN ABOUT 9.00 M. COUPLED WITH A CROSSROAD OF FOUR OR MORE LANES, THE CONTROL RADIUS R GENERALLY WILL NEED TO BE GREATER THAN 15.00 M. OR THE MEDIAN OPENING WILL BE TOO SHORT.

| WIDTH OF MEDIAN, M (M.) | DIMENSIONS IN METERS, WHEN | | | | | |
|---|---|---|---|---|---|---|
| | R = 27.00 M. | | R = 45.00 M. | | R = 69.00 M. | |
| | L | b | L | b | L | b |
| 6.00 | 17.00 | 19.00 | 20.00 | 23.00 | 21.00 | 27.00 |
| 9.00 | 14.00 | 20.00 | 17.00 | 26.00 | 19.00 | 30.00 |
| 12.00 | 12.00 | 21.00 | 15.00 | 27.00 | 17.00 | 33.00 |
| 15.00 | — | — | 13.00 | 29.00 | 15.00 | 35.00 |
| 18.00 | — | — | — | — | 14.00 | 37.00 |
| 21.00 | — | — | — | — | 12.00 | 38.00 |

## ABOVE - MINIMUM DESIGN OF MEDIAN OPENINGS
## ( TYPICAL BULLET NOSE ENDS )

NOT TO SCALE

### REMARK :

THE LENGTH OF THESE LANES IN RURAL AREAS IS GENERALLY BASED ON DECELERATION CONSIDERATIONS. HOWEVER, IN URBAN AREAS WHERE TRAFFIC SPEEDS ARE SIGNIFICANTLY LOWER AND RIGHT-OF-WAY MORE RESTRICTIVE, THE LENGTH MAY BE DICTATED MORE BY VEHICLE STORAGE REQUIREMENTS, PARTICULARLY AT TRAFFIC SIGNAL CONTROLLED INTERSECTIONS. AT LOCATIONS WHERE A FULL LENGTH DECELERATION LANE CANNOT BE PROVIDED, A MINIMUM TREATMENT ( E.G. 30.00 M. TAPER PLUS 30.00 M. PARALLEL LANE ) CAN STILL PROVIDE SIGNIFICANT BENEFITS. THE TOTAL LENGTH REQUIRED FOR DECELERATION LANES IS GIVEN IN TABLE. THIS LENGTH IS PROVIDED BY MEANS OF A TAPER AND A PARALLEL LANE. THE LENGTH OF TAPER ADOPTED IS TYPICALLY 50.00 M. RURAL, 30.00 M. URBAN, OR LESS. THE LENGTH OF DECELERATION LANE ON GRADE IS DETERMINED BY MULTIPLYING THE LENGTH WITH CORRECTION FACTOR FOR GRADE.

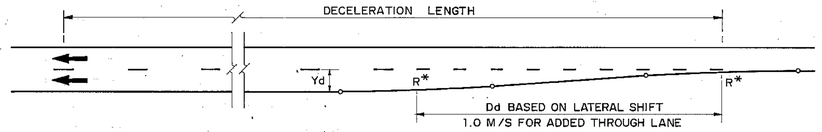


R* = EDGE OF PAVEMENT ROUNDING
( 100 FOR DECEL. LANE
250 FOR ADDED THROUGH LANE )

Dd = 50 MAX. - RURAL, 30 MAX. - URBAN } FOR DECEL. LANE

$$Dd = \frac{V\,Yd}{3.6\,S}$$

WHERE
S = RATE OF LATERAL MOVEMENT ( M./SEC )
V = DESIGN (OR 85 PERCENTILE OPERATING) SPEED (KM./H.)
Yd = LATERAL MOVEMENT (M) OF VEHICLE (OR ADDED ROAD WIDTH).

DIVERGE TAPERS

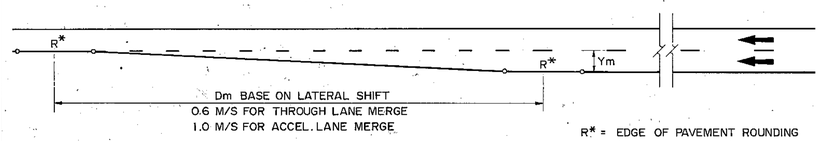


R* = EDGE OF PAVEMENT ROUNDING
( 200 TO 400 M. )

$$Dm = \frac{V\,Ym}{3.6\,S}$$

WHERE
Dm = MINIMUM LENGTH (M) OF TAPER
S = RATE OF LATERAL MOVEMENT ( M./SEC )
V = DESIGN (OR 85 PERCENTILE OPERATING) SPEED (KM./H.)
Ym = LATERAL MOVEMENT (M) OF VEHICLE, OR WIDTH REDUCTION.

MERGE TAPERS

## AUXILIARY TURN LANE TAPERS

NOT TO SCALE

### TABLE : LENGTH OF DECELERATION LANES

| DESIGN SPEED OF APPROACH ROAD ( KM./H.) | LENGTH OF DECELERATION LANE (M.)* ( INCLUDING LENGTH OF TAPERED APPROACH ) WHERE DESIGN SPEED OF EXIT CURVE (KM./H.) IS : | | | | | | | | |
|---|---|---|---|---|---|---|---|---|---|
| | 0† | 20 | 30 | 40 | 50 | 60 | 70 | 80 | 90 |
| 50 | 60 | 54 | 46 | 32 | — | — | — | — | — |
| 60 | 80 | 74 | 64 | 50 | 28 | — | — | — | — |
| 70 | 100 | 94 | 82 | 70 | 54 | 34 | — | — | — |
| 80 | 120 | 112 | 104 | 94 | 82 | 64 | 40 | — | — |
| 90 | 140 | 134 | 126 | 116 | 102 | 88 | 70 | 44 | — |
| 100 | 170 | 162 | 154 | 144 | 132 | 118 | 100 | 80 | 50 |

* LENGTH FOR LEVEL GRADE. ( SEE TABLE : CORRECTION FOR GRADE ).
† LENGTH REQUIRED WHERE A VEHICLE DECELERATES TO A STOP CONDITION.

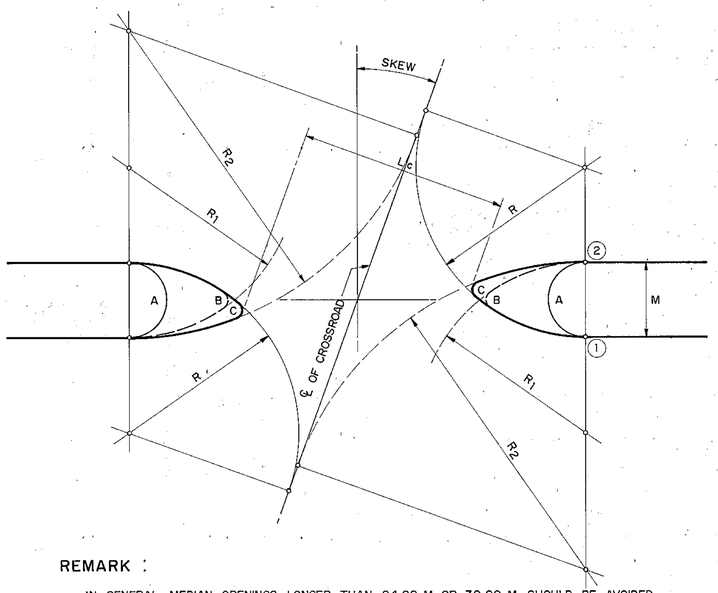


### REMARK :

IN GENERAL, MEDIAN OPENINGS LONGER THAN 24.00 M. OR 30.00 M. SHOULD BE AVOIDED, REGARDLESS OF SKEW. THIS PLAN MAY CALL FOR SPECIAL CHANNELIZATION, RIGHT-TURN LANES, OR ADJUSTMENT TO REDUCE THE CROSSROAD SKEW, ALL OF WHICH RESULT IN ABOVE-MINIMUM DESIGNS

## MINIMUM DESIGN OF MEDIAN OPENINGS
## ( EFFECT OF SKEW )

NOT TO SCALE

### NOTES :

1. MEDIAN OPENING SHOULD BE 3 - 5 KM. INTERVAL FOR RURAL AREAS WITH VILLAGE 1.5 KM. ( MINIMUM ) LONG IN THE INTERVAL.
2. MEDIAN OPENING IN URBAN AREAS SHOULD BE 250 M. ( MINIMUM ) INTERVAL ( FOR THE LARGE CITY ).

### TABLE : EFFECT OF SKEW ON MINIMUM DESIGN FOR MEDIAN OPENINGS
### ( TYPICAL VALUES BASED ON CONTROL RADIUS OF 15.00 M. )

| SKEW ANGLE ( DEGREES ) | WIDTH OF MEDIAN ( M. ) | LENGTH OF MEDIAN OPENING MEASURED NORMAL TO THE CROSSROAD ( M. ) | | | R FOR DESIGN C ( M. ) |
|---|---|---|---|---|---|
| | | SEMICIRCULAR A | BULLET NOSE | | |
| | | | SYMMETRICAL B | ASYMMETRICAL C | |
| 0 | 3.00 | 27.00 | 19.00 | — | — |
| | 6.00 | 24.00 | 13.00 | — | — |
| | 9.00 | 21.00 | 12.00 MIN | — | — |
| | 12.00 | 18.00 | 12.00 MIN. | — | — |
| | 15.00 | 15.00 | 12.00 MIN. | — | — |
| | 18.00 | 12.00 | 12.00 MIN. | — | — |
| 10 | 3.00 | 32.00 | 24.00 | 23.00 | 21.00 |
| | 6.00 | 28.00 | 17.00 | 16.00 | 20.00 |
| | 9.00 | 25.00 | 14.00 | 12.00 MIN. | 20.00 |
| | 12.00 | 21.00 | 12.00 MIN. | 12.00 MIN. | 19.00 |
| | 15.00 | 18.00 | 12.00 MIN. | 12.00 MIN. | 18.00 |
| | 18.00 | 14.00 | 12.00 MIN. | 12.00 MIN. | 18.00 |
| 20 | 3.00 | 36.00 | 29.00 | 27.00 | 29.00 |
| | 6.00 | 32.00 | 22.00 | 20.00 | 28.00 |
| | 9.00 | 28.00 | 18.00 | 14.00 | 26.00 |
| | 12.00 | 24.00 | 14.00 | 12.00 MIN. | 25.00 |
| | 15.00 | 20.00 | 12.00 MIN. | 12.00 MIN. | 23.00 |
| | 18.00 | 16.00 | 12.00 MIN. | 12.00 MIN. | 21.00 |
| 30 | 3.00 | 41.00 | 34.00 | 32.00 | 42.00 |
| | 6.00 | 36.00 | 27.00 | 23.00 | 39.00 |
| | 9.00 | 31.00 | 23.00 | 17.00 | 36.00 |
| | 12.00 | 27.00 | 19.00 | 13.00 | 33.00 |
| | 15.00 | 23.00 | 15.00 | 12.00 MIN. | 30.00 |
| | 18.00 | 18.00 | 12.00 | 12.00 MIN. | 27.00 |
| 40 | 3.00 | 44.00 | 38.00 | 35.00 | 63.00 |
| | 6.00 | 39.00 | 32.00 | 27.00 | 58.00 |
| | 9.00 | 35.00 | 27.00 | 20.00 | 52.00 |
| | 12.00 | 29.00 | 23.00 | 15.00 | 47.00 |
| | 15.00 | 24.00 | 19.00 | 12.00 MIN. | 42.00 |
| | 18.00 | 19.00 | 15.00 | 12.00 MIN. | 36.00 |

### TABLE : CORRECTION FOR GRADE

| GRADE | RATIO OF LENGTH ON GRADE TO LENGTH OF LEVEL | |
|---|---|---|
| | UPGRADE | DOWNGRADE |
| 0 — 2 % | 1.0 | 1.0 |
| 3 — 4 % | 0.9 | 1.2 |
| 5 — 6 % | 0.8 | 1.35 |

# KINGDOM OF THAILAND
## MINISTRY OF TRANSPORT AND COMMUNICATIONS
## DEPARTMENT OF HIGHWAYS

STANDARD DRAWING

MEDIAN OPENING

| | | |
|---|---|---|
| DESIGNED : D.O.H. & CONSULTANTS | CHECKED : | DATE JULY 1994 |
| SUBMITTED : (DIRECTOR OF LOCATION & DESIGN DIVISION) | | SCALE NONE |
| APPROVED : (DIRECTOR GENERAL) | | DWG. NO. MD-902 |
| | | SHEET NO. 112 |

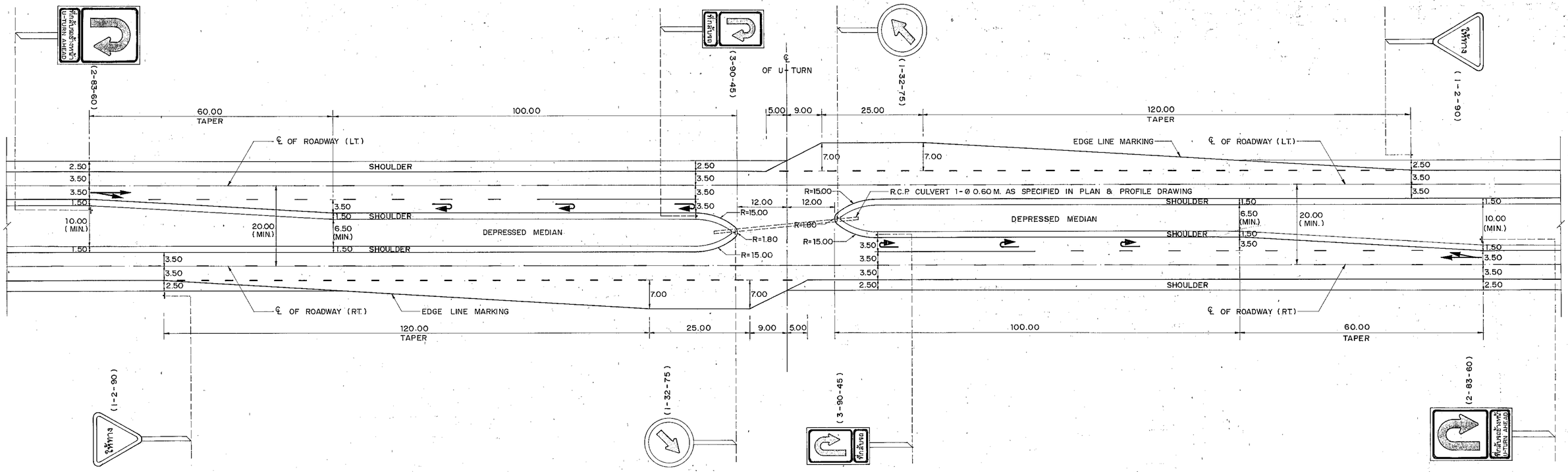


## SPECIAL U - TURN TYPE I

SCALE 1 : 500

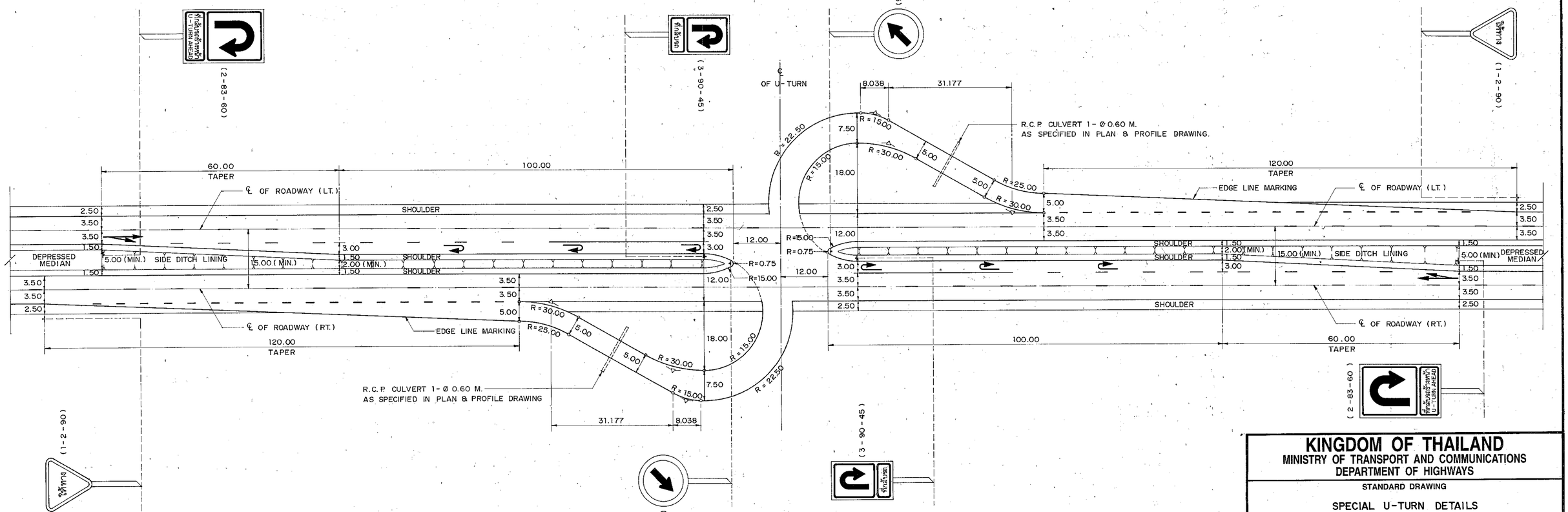


## SPECIAL U - TURN TYPE II

SCALE 1 : 500

# KINGDOM OF THAILAND
MINISTRY OF TRANSPORT AND COMMUNICATIONS
DEPARTMENT OF HIGHWAYS

STANDARD DRAWING

SPECIAL U-TURN DETAILS

| | | |
|---|---|---|
| DESIGNED : D.O.H. & CONSULTANTS | CHECKED : | DATE : JULY 1994 |
| SUBMITTED : (DIRECTOR OF LOCATION & DESIGN DIVISION) | | SCALE 1 : 500 |
| | | DWG. NO. MD-903 |
| APPROVED : (DIRECTOR GENERAL) | | SHEET NO. 113 |